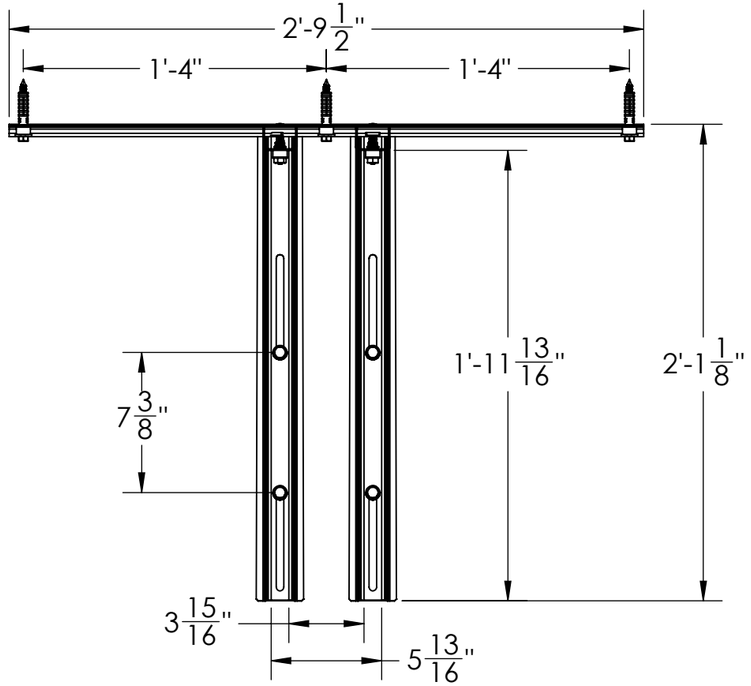

PLAN VIEW RETRACTED

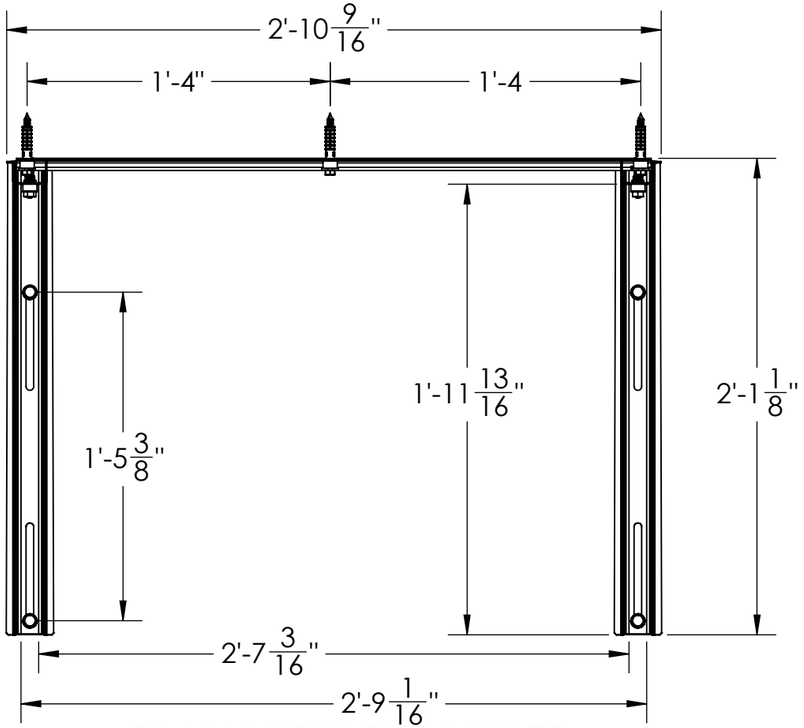

PLAN VIEW EXPANDED

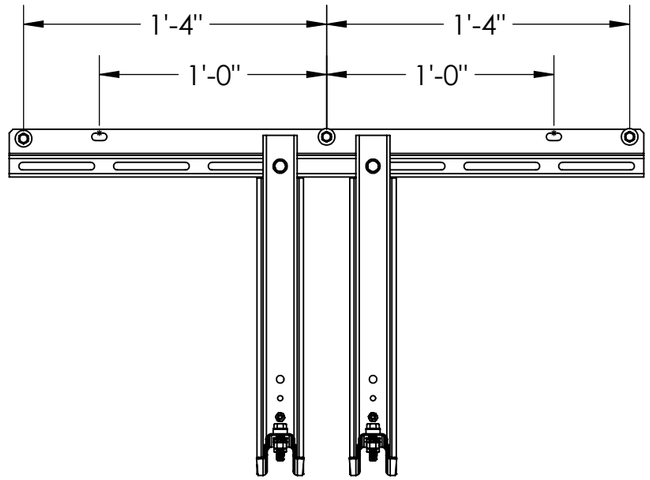

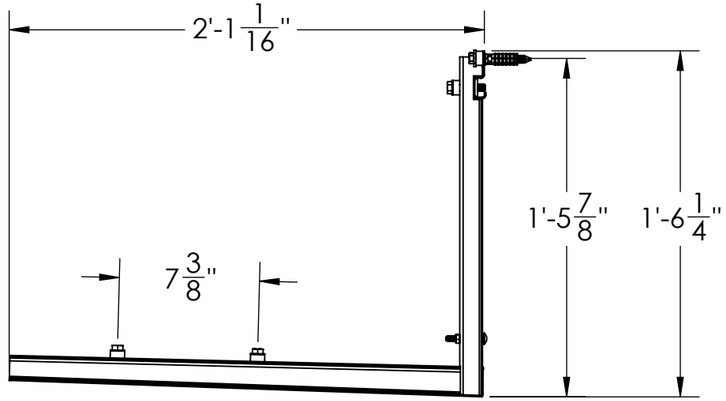

SIDE VIEW RETRACTED

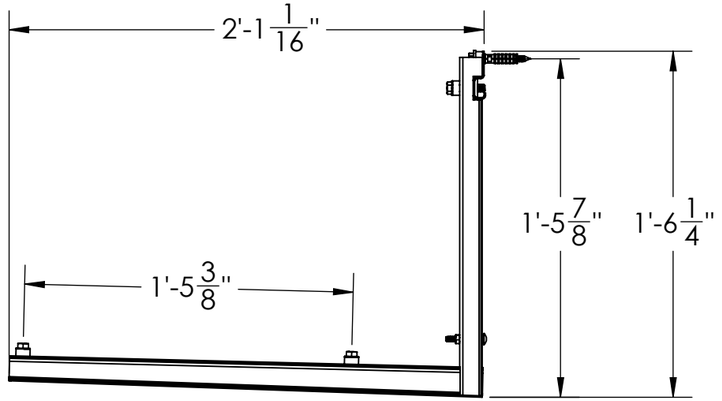

SIDE VIEW EXPANDED

IMPORTANT NOTE: THE INSTALLER IS RESPONSIBLE FOR THETHERING AND BOLTING UNITS TO WITHSTAND WIND AND/OR SEISMIC LOADS.

UNLESS OTHERWISE SPECIFIED:
DIMENSIONS ARE IN INCHES [MILLIMETERS]
TOLERANCES ARE: ANGLES ±1.0°
FRACTIONAL SIZES X/Y ±1/64

INCHES	[MILLIMETERS]
.X = ±0.1	[X = ± 2.5]
.XX = ±0.01	[.X = ± 1.3]
~~.XXX = ±0.005~~	~~[.XX = ±0.13]~~

THIRD ANGLE PROJECTION

DIVERSITECH

CONFIDENTIAL - PROPRIETARY - DO NOT COPY
THE INFORMATION SET FORTH IN THIS DOCUMENT AND RELATED INFORMATION IS THE CONFIDENTIAL PROPERTY OF DIVERSITECH CORPORATION, AND IS NOT TO BE COPIED OR REPRODUCED OR DISTRIBUTED IN ANY FORM WITHOUT PRIOR WRITTEN PERMISSION FROM DIVERSITECH CORPORATION.

DO NOT SCALE DRAWING

MATERIAL:

DWG. NO. Wall Bracket - 2000
MODEL NO. QSWB-2000

DESCRIPTION

WEIGHT GMS.

REV.

SHEET 1 OF 2

ITEM NO.	PART NUMBER	DESCRIPTION	Default/ QTY.
1	WB108	Wall Bracket Glider Track 14ga	1
2	WB107	Wall Bracket L-Bar 14ga.	2
3	HDKWB02	Hardware pack for QSWB2000	1

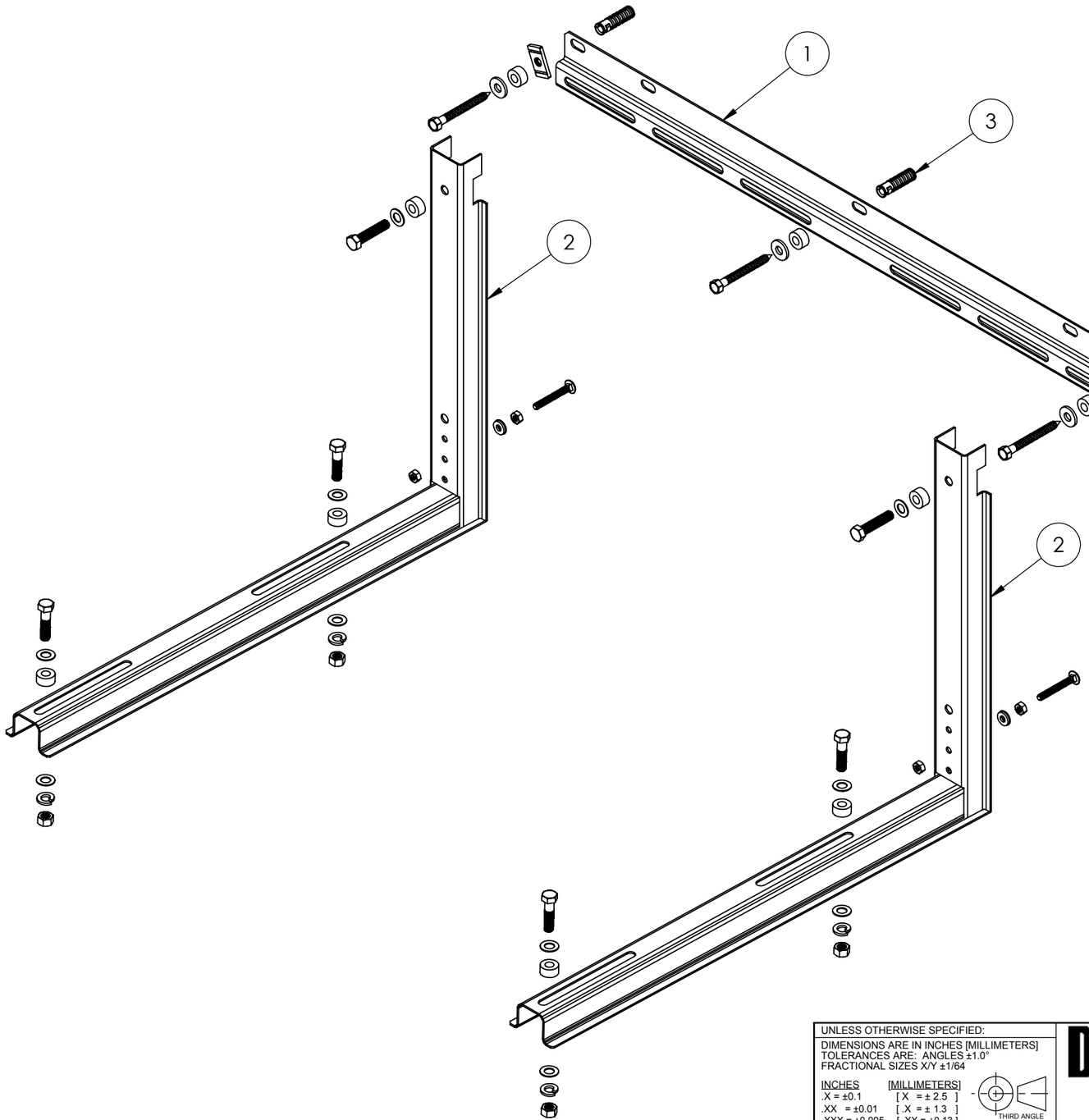

NOTE - ALL ASSEMBLY HARDWARE IS INCLUDED

UNLESS OTHERWISE SPECIFIED:
DIMENSIONS ARE IN INCHES [MILLIMETERS]
TOLERANCES ARE: ANGLES ±1.0°
FRACTIONAL SIZES X/Y ±1/64

INCHES	[MILLIMETERS]
.X = ±0.1	[X = ± 2.5]
.XX = ±0.01	[.X = ± 1.3]
.XXX = ±0.005	[.XX = ±0.13]

THIRD ANGLE PROJECTION

DIVERSITECH

CONFIDENTIAL - PROPRIETARY - DO NOT COPY
THE INFORMATION SET FORTH IN THIS DOCUMENT AND RELATED INFORMATION IS THE CONFIDENTIAL PROPERTY OF DIVERSITECH CORPORATION, AND IS NOT TO BE COPIED OR REPRODUCED OR DISTRIBUTED IN ANY FORM WITHOUT PRIOR WRITTEN PERMISSION FROM DIVERSITECH CORPORATION.
DO NOT SCALE DRAWING

MATERIAL:

DWG. NO. Wall Bracket - 2000
MODEL NO. QSWB-2000

DESCRIPTION

WEIGHT GMS.

REV.

SHEET 2 OF 2