EC-1-DV SERIES

APPLICATIONS



- The EC-1-DV model is designed to accommodate multiple electrical requirements within one pump. The DV suffix indicates that the pump is capable of operating from a wide range of supply voltage to maintain consistent pump performance.
- The EC-1-DV Series is a new concept for mini pumps incorporating an improved noise reducing design and reliable solid-state switching technology. Easy to install pump (included) and reservoir (sold separately) wall brackets provide a quick and precise method to accurately position and secure both parts of the pump quickly. The two-piece design allows the reservoir to be placed within the air handler while the pump-controller is located outside the air handler. The two components are connected via a convenient communications wire and suction tubing.
- EC-1-DV is designed for use in removing condensate from wall mount, ductless mini-split air conditioners up to 34,000 Btu. It can also be used to remove condensate from fan coils and suspended ceiling air conditioners. The pump can be installed above the air conditioner in a false ceiling, behind the wall mount air handler, or in plastic conduit or line-set channel. The reservoir, featuring a clear tank, connects to the condensate drain hose and must be positioned flat and horizontal while the pump can be oriented in any position within 3.3 ft.

FEATURES

Pump - Controller

- Normally-closed relay rated at 8 A resistive - 250 V alarm
- 21 dB(A)*
- 1/4" I.D. pump discharge outlet
- Elastomeric mounting grommets on pump housing bracket
- Elastomeric passive vibration isolator used to dampen pump vibration
- Wall bracket for pump included; bracket for reservoir sold separately
- Thermal protection: 176 °F
- 60" power cable
- 3.3' communications cable (pump to reservoir)
- Ambient temperature range: 32 °F - 140 °F
- Maximum water temperature: 140 °F
- 2-year warranty

Reservoir

- Clear reservoir for instant visual inspection of water level, float, and filter
- Hall effect on/off level sensors with high-water sensor feature
- Extra-large filter screen for longer intervals between cleaning
- Multi-step drain hose adapter (1/2", 5/8", and 3/4")
- Simple to open reservoir for easy maintenance

EC-1-DV SERIES

SERIES SPECIFICATIONS

Item No.	Model	Input Voltage	Hz	Amps	Watts	Discharge Size	Performance GPH (LPH) @ Head					Shut-Off Ft.	Suction Lift	PSI	Cord	Weight (lbs)
							0′	1′	5′	10′	20′					
553507	EC-1-DV	110-240	50/60	0.18	18	1/4"	2.7 (10)	2.5 (9.5)	1.8 (6.8)	1.5 (5.7)	1.2 (4.5)	33 (10m)	3′ (.91 m)	26	4.9 (1.5 m)	1.7 (0.77 Kg)

ENGINEERING DATA

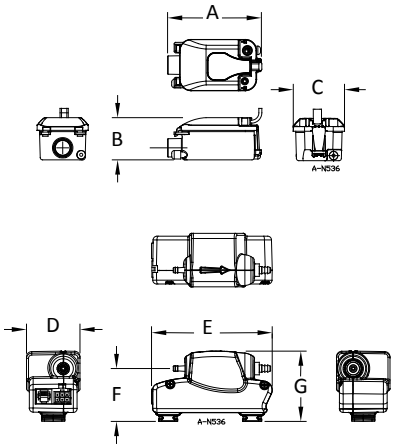

A	B	C	D
3.20 (81.15)	1.44 (36.51)	1.74 (44.29)	1.82 (46.23)

E	F	G
4.11 (104.40)	1.80 (45.67)	2.39 (60.74)

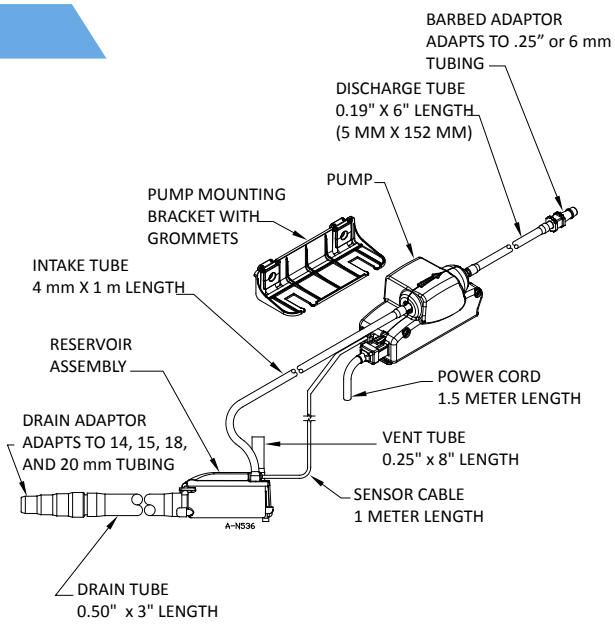

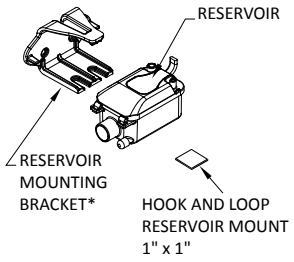

* 10000011891, Reservoir Bracket Mounting Kit, Sold Separately

PERFORMANCE DATA

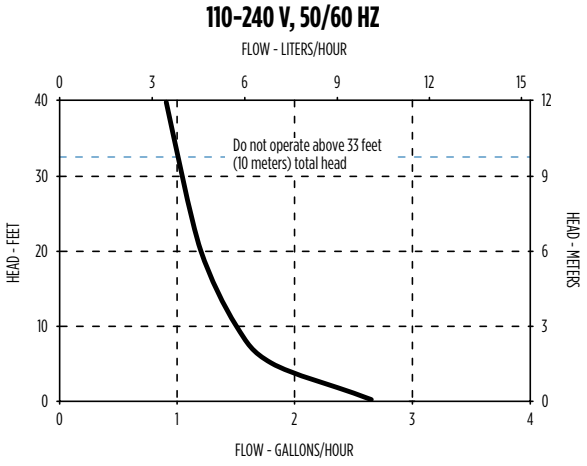

*Tested under conditions assumed consistent with competitors' published sound ratings.