INSTRUCTIONS

English

Combi

Condensate Pump

3004146

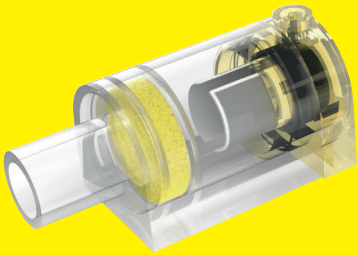

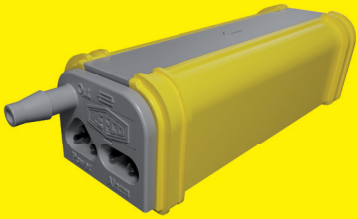

HVAC/R
Service Products

REFCO

Contents

Introduction	02
General information	02
Important safety notice	02
Technical data	03
Product description	04
Transport and storage	06
Commissioning	06
Maintenance	16
Return and disposal	17
Troubleshooting	17
Replacement parts	18
Appendix	18

Introduction

Thank you for purchasing our all-new Combi condensate pump. The Combi has been completely redesigned retaining all the good features you like and upgrading everything else. Its digital water sensor, universal voltage and user configurable flow ensure it is the strongest, quietest under A/C mounted condensate pump on the market today.

General information

REFCO products have been specially designed and manufactured for use by trained refrigeration and air-conditioning service engineers only. REFCO explicitly states that their products must only be sold to professionally trained service engineers.

These operating instructions contain important information about handling the Combi. Safe operation of the device requires adherence to all safety instructions and operating guidelines.

- The local safety regulations applicable to the area in which the Combi is being used should also be adhered to, along with general safety guidelines.
- The operating instructions are part of the product and should be stored in close proximity to the Combi where they should be readily accessible to qualified personnel at all times.
- The qualified personnel must have carefully read and understood the operating instructions prior to operating the device.
- The manufacturer shall not be liable for any damage whatsoever arising through improper use, failure to comply with these operating instructions, assignment of inadequately qualified personnel, or unauthorised modification of the Combi.
- The general terms and conditions as set out in the sales documentation shall apply.

Symbols and writing standards

WARNING/CAUTION
An appropriate safety instruction should be followed or caution to a potential hazard exists.

DANGEROUS VOLTAGE
To indicate hazards arising from dangerous voltages.

Please read all safety and installation instructions completely before commencing.

Waste of Electrical and Electronic Equipment (WEEE) Do not throw the pump in domestic waste

CE compliant
Certification mark that indicates conformity with health, safety and environmental protection standard for products

RoHS compilant

Regulatory Compliance Mark (RCM)
Compliant with the electrical safety requirements of Australia and New Zealand

Safety instructions

Please read all safety and installation instructions completely before commencing.
To prevent any risk only certified and appropriately trained staff with sufficient technical training and tools shall install this product. Product installation and electrical connections both require professional training for safe installation and correct product operation.
This appliance is not intended for use by persons (including children) with reduced physical, sensory or mental capabilities, or lack of experience and knowledge, unless they have been given supervision or instruction concerning use of the appliance by a person responsible for their safety.
Children should be supervised to ensure that they do not play with the appliance.

Save these instructions for further reference.

For indoor use only. To identify electrical equipment designed primarly for indoor use. Not submersible.

The Combi condensate pump is to be installed in accordance with local and regional electrical codes.

WARNING: Disconnect all electrical power before starting installation, maintenance, or service work.

WARNING: Disconnect electrical power before removing and checking internal fuse.

CAUTION: Do not install the REFCO condensate pump if there are any signs of damage.

WARNING: The supplied power and alarm cords must be checked for signs of damage before installation and periodically thereafter. If a cord is damaged, it must be replaced by the correct part supplied either by Refco or by an approved service agent.

The Combi combined power/alarm cable lead-out is non-replaceable. If this is damaged the entire pump must be replaced.

WARNING: The REFCO condensate pump cables should not be cut, and should be routed so that they cannot be damaged during and after installation.

CAUTION: All tubing connections are to be secured in place on the barb connections using self-locking cable tie-wraps.

DO NOT use tools to connect the tubing.

DO NOT operate this product in ambient temperatures below 5 °C (41 °F).

DO NOT operate with incoming water above a temperature of 40 °C (104 °F).

CAUTION: Do not allow any chemicals to come in contact with this condensate pump. Please remove the pump and water sensor before using any coil cleaning solutions and other chemicals. Flush the evaporator coils with water before reinstalling the condensate pump and water sensor.

Ensure the evaporator coils are free of chemicals before reinstallation of the REFCO Combi pump.

CAUTION: This appliance incorporates an earth connection for functional purposes only.

Power cable ⑪ must not be entered with a tensile load.

Alarm cable ⑫ and power cable must be completely pressed into the jack.

Only use the original power cable ⑪ and alarm cable ⑫.

Technical data

Maximum flow rate:	42 l/Hr. (11 GPH)
Maximum suction:	3 m (9.80 ft.) self priming
Maximum head:	20 m (65.60 ft.)
Maximum horizontal run:	100 m (330 ft.) at 0 head and 0 suction
Sound:	20dBA at 1 m DIN EN ISO 3741:2011 / DIN EN ISO 3744:2010
Voltage:	100 ~ 240 VAC 50/60 Hz auto sensing universal power input
Power:	8W during maximum operation at 110V
Alarm relay:	10 Amps contacts with integrated replaceable 10A fuse 5 × 20 mm
Weight:	1'000 g (2.2 lb.)
Discharge star tube:	6.25 mm I.D. (1/4") × 1 m (3.3 ft.)
Packaging dimensions:	250 x 340 x 54 mm (9.9 x 13.4 x 2.1 inches)
Bulk pack dimensions:	10 Pcs dimensions are 590 x 265 x 365 mm (23.2 x 10.4 x 14.4 inches)
Color:	RAL #7040 Grey and RAL #1023 Yellow
Protection:	Fully potted, IP-44
Operation temp:	Ambient 5°C to 40°C (41°F to 104°F) / Water 5°C to 40°C (41°F to 104°F)
Compliance:	

Cappacity

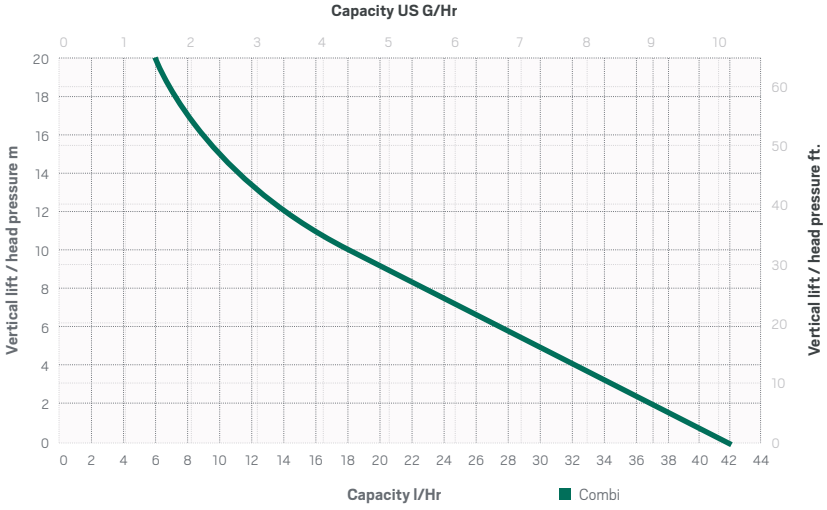

Product description

1. Diagnostic LED
2. USB port
3. DIP-switches
4. Water sensor socket
5. Pump body
6. Factory-installed fuse
7. Digital sensor
8. Replacable filter
9. Water sensor

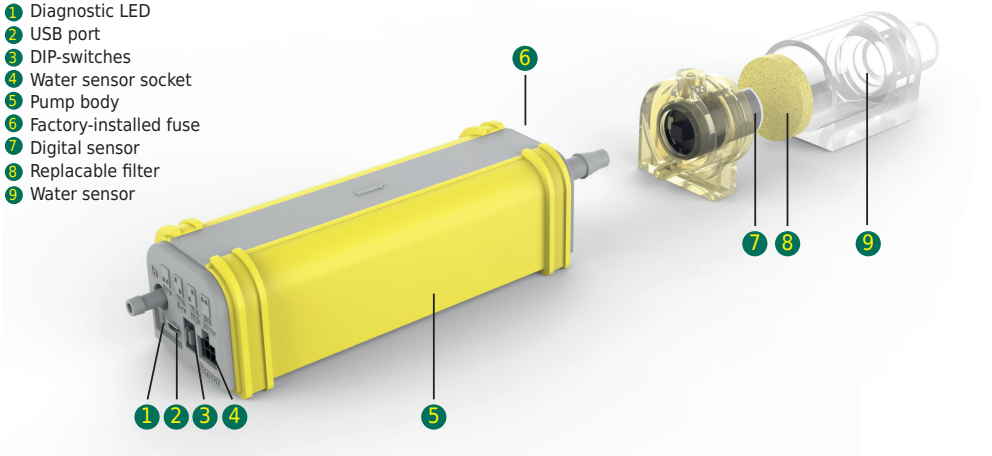

Dimensions pump



Provided accessories

10

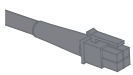

Sensor cable
Part No. 3004007

11

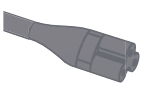

Power cable
Type: SVT 18AWG*3C Cable
+H05VV-F 3G 0.75mm²
Part No. 3004139

12



Alarm cable
Part No. 3004140

13



Suction tube
Part No. 3004034

14

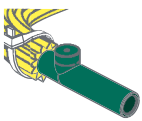

Star tube and Stop-Siphon device
Part No. 3004065

15



Alarm relay HRC 10A fuse, 5x20mm
Part No. 3004050

16

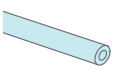

Vent tube
Part No. 3004033

17



Cable ties, 3 pcs.

LED alarm relay indications

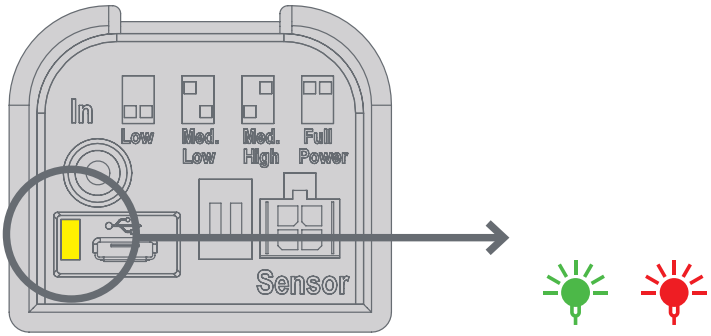

LED alarm relay operation table

Start up sequence		(normally closed)	(normally open)
Pump status	**Condensate level**	**Default operation**	**Peripheral Mode**
Not powered	N/A	NC COM	NC COM
Powered	Below alarm level	NC COM	NC COM
Powered	Alarm-activated	NC COM	NC COM

✻ Alarm relay operation is user configurable see page 11 ✻

LED indications in operation

	No power		Pump is miswired or no incoming voltage. Problem with A/C system or alarm is miswired.
Or	**Start up LED sequence (default mode)**		Alternating red/ green flashes 5x only then stops and goes to standby mode.
Or	**Start up LED sequence (peripheral mode)**		Alternating red/ green flashes 5x only then stops and goes to standby mode.
	Standby mode – waiting for water		Blinking green continuously.
	Pumping water		Solid green. Running in low, med low, med high, or high power config. normal operation.
	High water level mode		Blinking red. Running above high water level.
	Alarm mode – relay activated		Solid red. Pump cannot keep up with water input. To prevent water overflow break power to A/C until water level reduces.
	Reconfigure code		Pump has had 3 extra long run cycles, reconfigure dip- switches for more capacity.

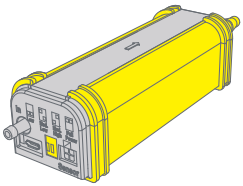

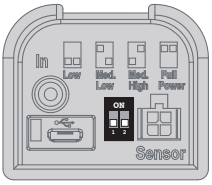

Factory default



low
up to 18K Btu/h
(5.3kW)



medium low
up to 42K Btu/h
(12kW)



medium high
up to 72K Btu/h
(21.1kW)



high
up to 120K Btu/h
(35kW)

Ratings for air conditioning units

The rating of the condensate pump has to be adjusted according to the power of the conditioning unit.

Transport and storage

Transport

Inspect the Combi for any potential transportation damage. Any obvious damage should be reported to the vendor immediately.

Storage

- Storage temperature: -20 °C to +60 °C
- Humidity: 0 to 90% relative humidity (no condensation)

Commissioning

Application

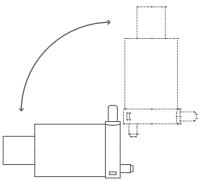

Water sensor can be used horizontally or vertically.



Water sensor and pump in the AC unit next to each other

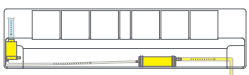

Water sensor vertical and pump in the AC unit



Water sensor in the AC unit, pump in the ceiling

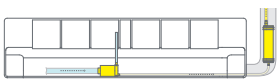

Water sensor inside the AC unit and pump outside the unit

Tools needed

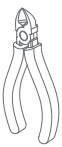



PH#2

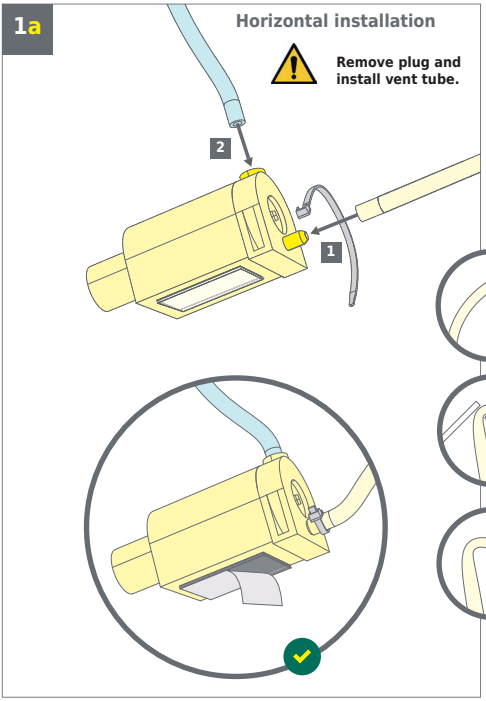
1a
Horizontal installation
Remove plug and install vent tube.
2
1

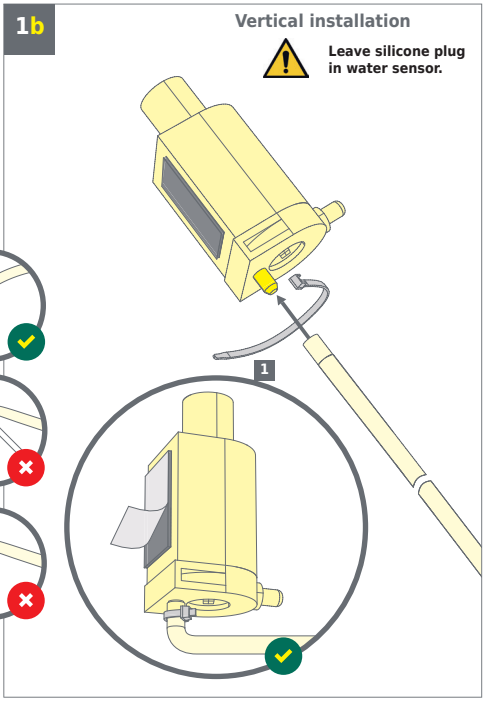
1b
Vertical installation
Leave silicone plug in water sensor.
1

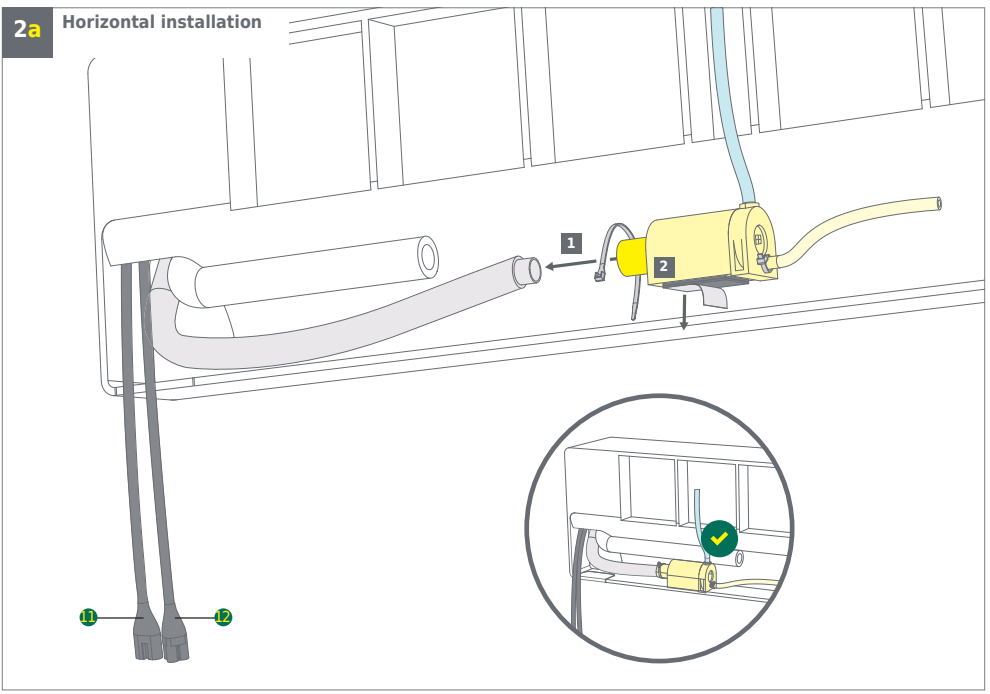
2a
Horizontal installation
1
2
L1
L2

2b Vertical installation

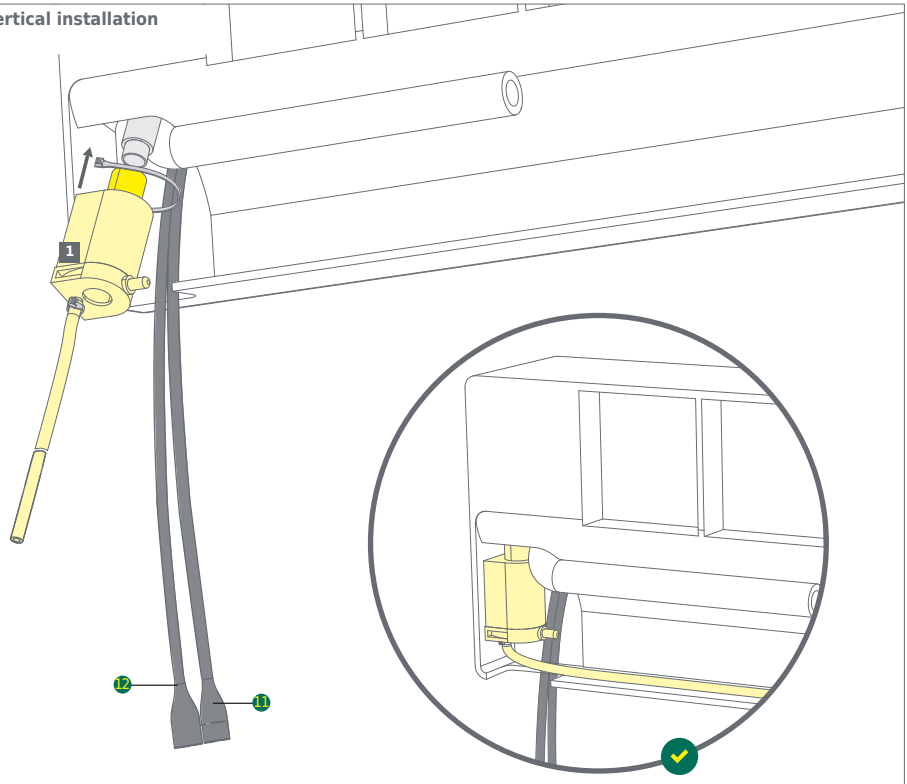

3

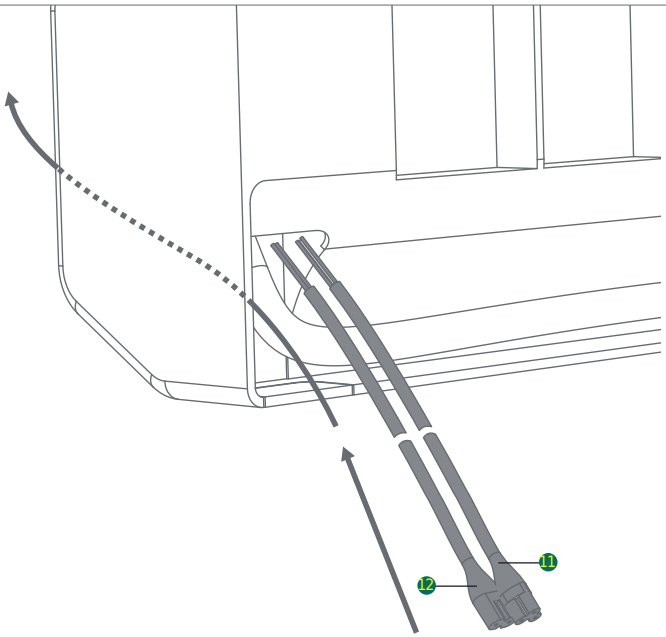

4

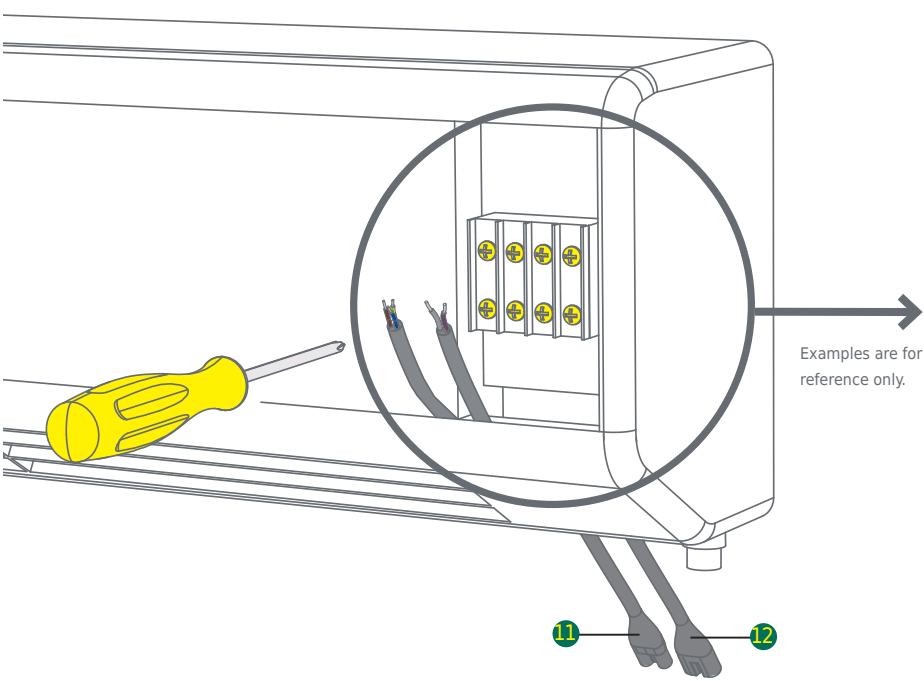

Examples are for reference only.

WARNING:
Disconnect all electrical power before starting installation, maintenance, or service work.

Installations must only be carried out by qualified personnel.

Plug connections have to be completely dry.

INPUT POWER:
100-240V, 50/60Hz, 2.5A (Max)

The alarm relay fuse must be rated for the specific application and of the HRC type, 5 x 20mm 250 VAC, 10A (Max)

This appliance incorporates an earth connection for functional purposes only

Below are examples of how REFCO pumps can be installed. For reference only.

When indoor evaporator unit is powered from the outdoor condenser unit (drawing # 1)

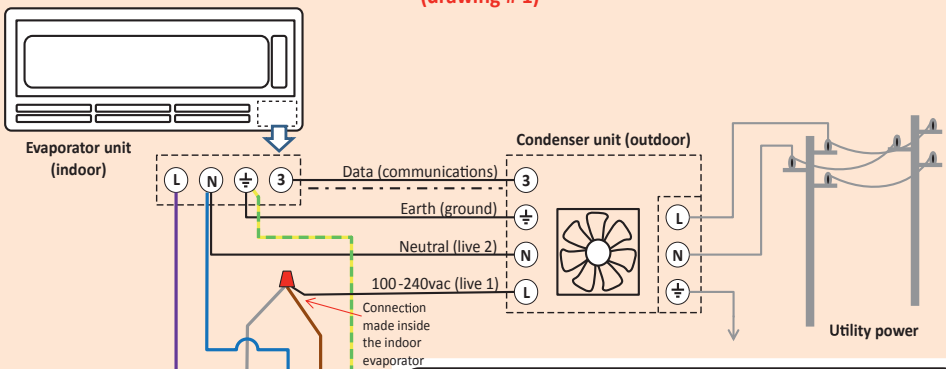

Alarm relay operation table

Power up LED flash sequence			Or
Pump status	**Condensate level**	**default operation**	**Peripheral mode**
Unpowered (or pump failure)	n/a	NC COM	NC COM
Powered	Below alarm level	NC COM	NC COM
Powered	Alarm activated	NC COM	NC COM

To change alarm relay operation

1. Unplug pump
2. Move dip-switch positions to
3. Plug pump in
4. Wait for one green LED blink
5. Move dip-switch positions to
6. Wait for one red LED blink
7. Reset dip-switch positions to
8. Wait for one green LED blink
9. Unplug pump
10. Set the dip-switches back to the desired capacity configuration. (Low, medium-low, medium-high, high)
11. Plug pump in and check that power up LED sequence matches the desired alarm relay operation
12. Done!

∗ To reset alarm relay to default operation, repeat steps 1 thru 11

Default Mode
Can be used to *deactivate* an external device (e.g. the Evaporator unit) when the condensate is above the alarm level.

The drawings on this page show *Default Mode* examples.

Peripheral Mode
Can be used to *activate* an external device (e.g. an audible or visible alert) when the condensate is above the alarm level

When multi-split system is installed (drawing # 2)

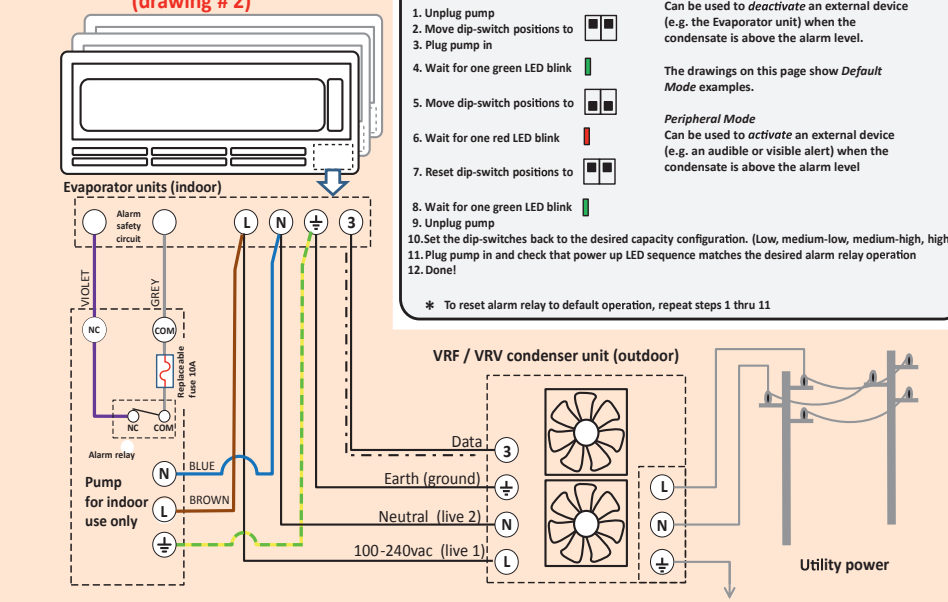

Below are examples of how REFCO pumps can be installed. For reference only.

When outdoor condenser is powered from the indoor evaporator unit (drawing # 3)

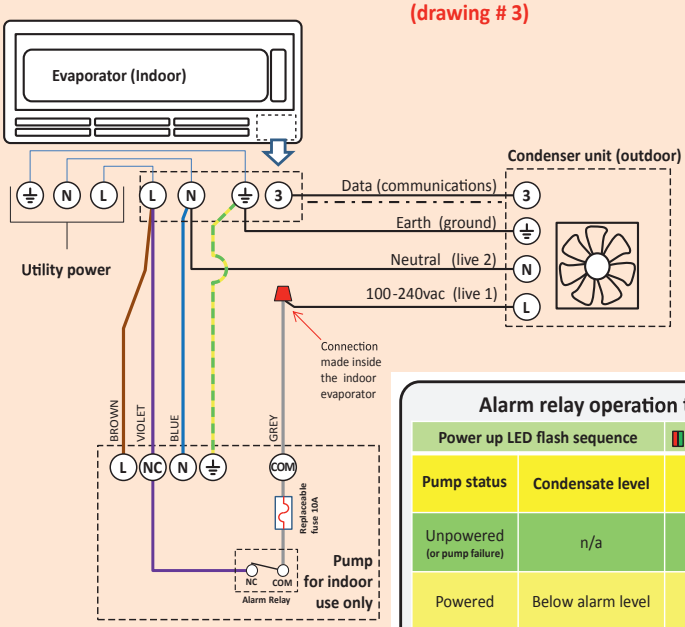

Alarm relay operation table

Or

Power up LED flash sequence			
Pump status	**Condensate level**	**default operation**	**Peripheral mode**
Unpowered (or pump failure)	n/a	NC COM	NC COM
Powered	Below alarm level	NC COM	NC COM
Powered	Alarm activated	NC COM	NC COM

To change alarm relay operation

1. Unplug pump
2. Move dip-switch positions to
3. Plug pump in
4. Wait for one green LED blink
5. Move dip-switch positions to
6. Wait for one red LED blink
7. Reset dip-switch positions to
8. Wait for one green LED blink
9. Unplug pump
10. Set the dip-switches back to the desired capacity configuration. (Low, medium-low, medium-high, high)
11. Plug pump in and check that power up LED sequence matches the desired alarm relay operation
12. Done!

∗ To reset alarm relay to default operation, repeat steps 1 thru 11

Default Mode
Can be used to *deactivate* an external device (e.g. the Evaporator unit) when the condensate is above the alarm level.

The drawings on this page show *Default Mode* examples.

Peripheral Mode
Can be used to *activate* an external device (e.g. an audible or visible alert) when the condensate is above the alarm level

Power only with no alarm circuit (drawing # 4)

Not recommended: Water damage can occur if drain line becomes kinked, pinched or plugged. Water damage can occur if pump fails.

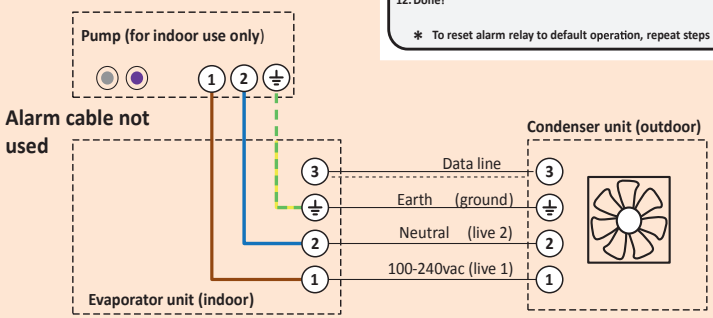

5

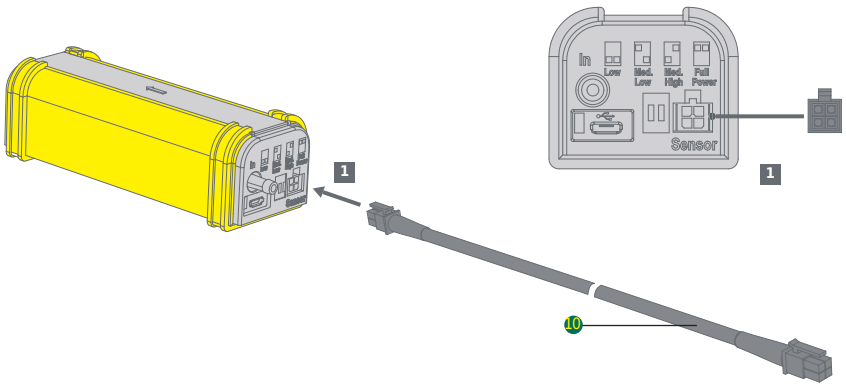

6

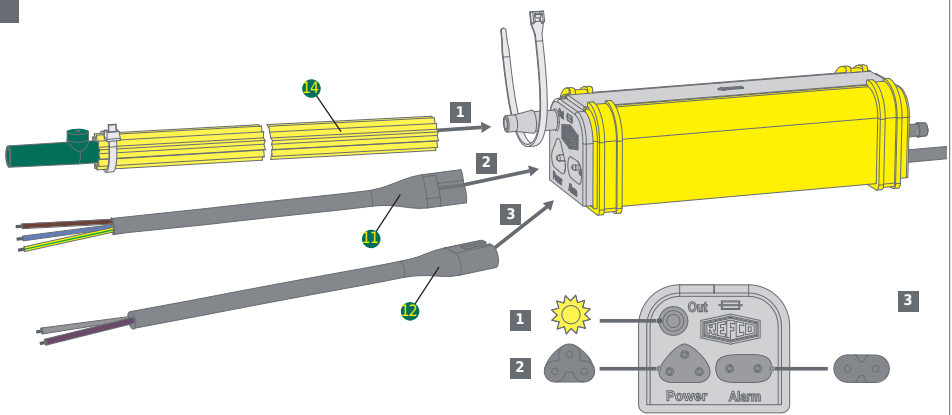

Power cable 11 must not be entered with a tensile load.

Alarm cable 12 and power cable must be completely pressed into the jack.

Only use the original power cable 11 and alarm cable 12.

7a Horizontal installation

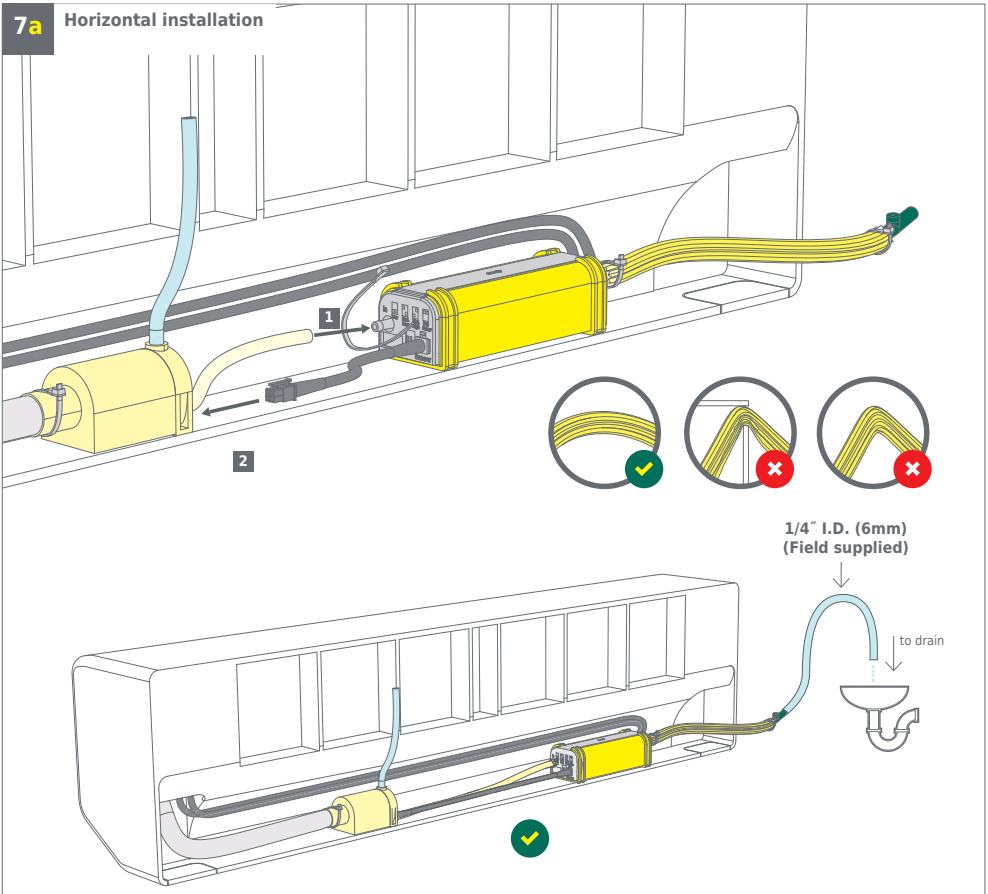

7b Vertical installation

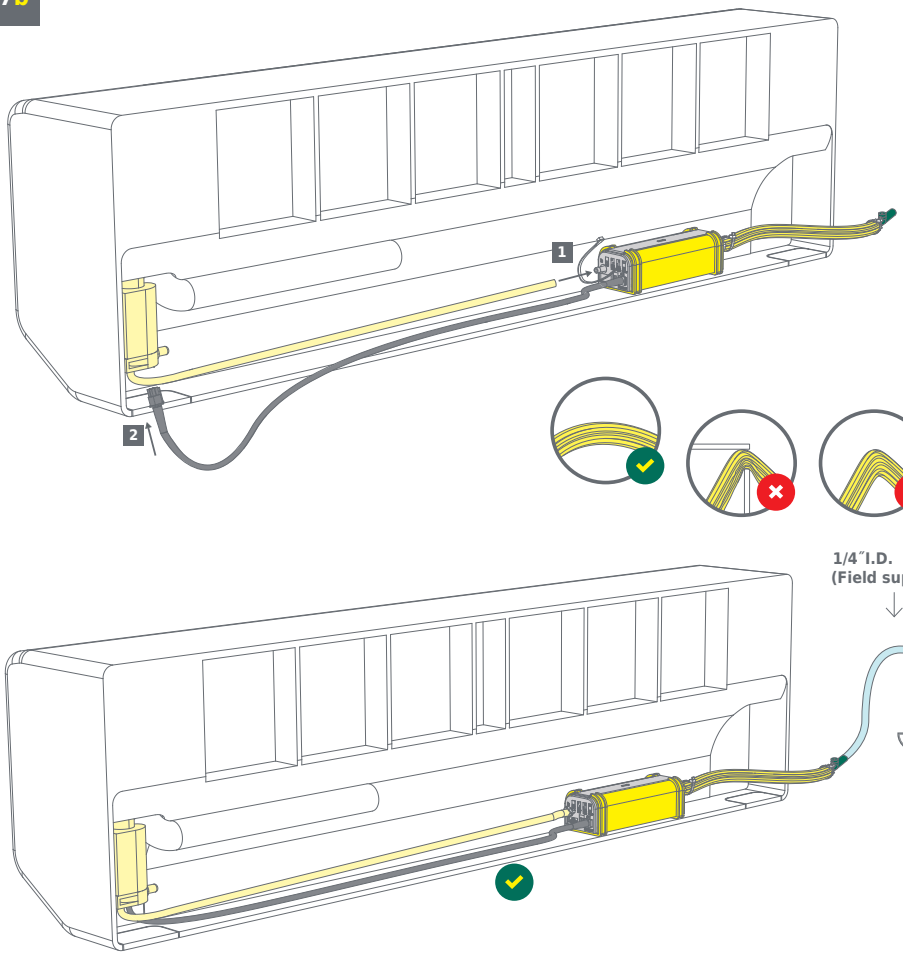

Maintenance

Water filter maintenance

Regular cleaning / replacement of the Combi water filter will help to prolong the life of the pump. The sole purpose of the water filter is to prevent foreign debris from entering the pump itself. The time period between filter service can only be determined from the specific environment in which the pump is installed. We recommend cleaning or replacing the water filter a minimum of every 12 months. However, when installed in environments with high dust, smoke, cooking oils or the possibility of algae growth it is recommended to clean or replace the filter every 3 months.

To clean / replace the water filter, simply remove it from the water sensor body and thoroughly wash with cold water and replace **in between the two** interior sensor body retaining flanges as shown below.

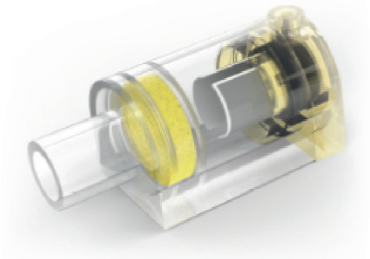

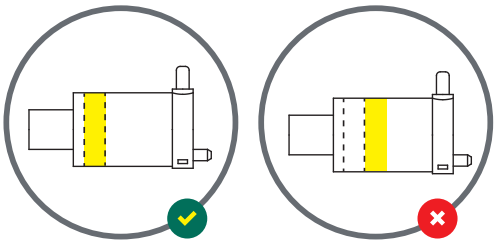

Change alarm fuse

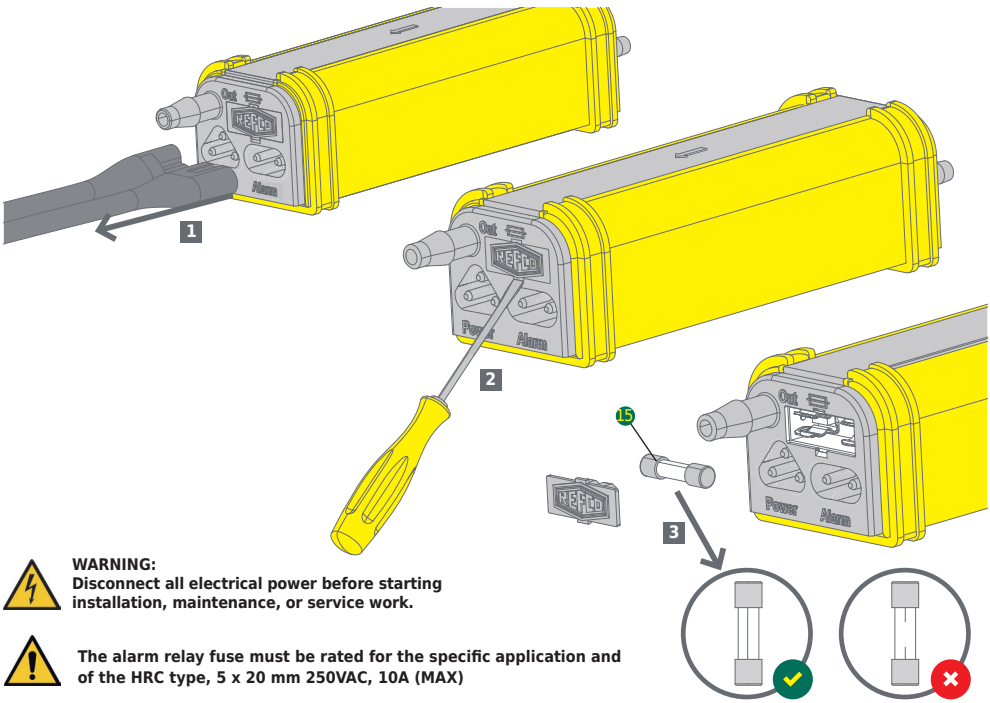

WARNING:
Disconnect all electrical power before starting installation, maintenance, or service work.

The alarm relay fuse must be rated for the specific application and of the HRC type, 5 x 20 mm 250VAC, 10A (MAX)

Installations must only be carried out by qualified personnel.

Return and disposal

At the end of useful life of the condensate pump send the product to the separate collection for electric and electronic devices. (According to local regulations)

Troubleshooting

Fault	Correction
No LED lights	Check for incoming voltage. The blue and brown wires are for power.
Pump runs constantly	Check filter placement. The water filter should not touch the digital sensor. Check the digital sensor for dirt, mold or debris. Clean with water. Check all tubing connections and ensure they are firmly pressed on the connection barbs and secured using cable ties. Check the entire drain line for clogs, kinks or the tube being pinched. If the pump is running constantly and water is flowing from the end of the drain line then you need to change the dip-switch power settings to increase the pump's capacity. The system has too much water or lift for the pump's current power setting.
A/C unit is off	Check the pump LED status light. If it's solid red (not blinking) AND the alarm wiring is connected properly, then the pump alarm relay is intentionally stopping the A/C unit from running. This prevents water overflow and possible water damage. This is the correct function of a condensate pump alarm relay. If the alarm wiring has been used, check the HRC alarm fuse for continuity using a multimeter and replace it if necessary. Glass fuses can be inspected visually. If the alarm wiring has been used, check that the pump is in Default Mode. If the alarm wiring has been used and the wiring is correct, check the status LED; if it is OFF, with no LED lights at all, then there is a fault either with the power main supply to the pump or with the pump itself. During alarm status the pump itself will continue to run to decrease the water level even when the A/C unit is not running. Once the water level is low enough, the pump will automatically reset the alarm relay to re-connect power back to the A/C unit. Please note: Many outdoor A/C units have a 5 min. time delay before they turn on the compressor and resume normal cooling operation.
Alarm is activated	If the alarm is activated (LED is solid red), the pump has too much incoming water for it to keep up. Once the water level gets too high on the digital sensor it will trip the alarm relay and stop power to the A/C system. (Only if the alarm wiring is used). The drain line could be blocked, kinked or pinched. You may have incorrect capacity settings on the pump relative to the capacity of the A/C unit and or a high lift vertical run.
Water is dripping	Check to ensure the alarm cable is correctly installed according to the appropriate wiring diagrams. Please note: There are different diagrams according to different types of A/C systems. If the alarm is not used and the drain line gets blocked, kinked or clogged, the pump can overflow. This is why you should always use the alarm function. Check all your hose connections. If you have a high head pressure (long vertical run), the water pressure can blow a hose off its barb. This is why you should always use the factory supplied cable ties.
Pump is noisy	Check the filter placement. If the water filter is touching the digital sensor, the digital sensor may believe it is water and activate the pump causing it to run dry when it should not be running at all. Clean the digital sensor and the filter with water. Configure pump capacity correctly according to the A/C capacity and lift rise and run of the drain line. (See dip-switch settings in installation instructions).
Slurping or gurgling	Check for and correct a siphon in the drain line. (Review siphon specific instruction sheet). If the drain line extends below the level of the pump, when the pump shuts down, the weight of the water remaining in the drain line will create a siphon effect which will suck water away from the pump causing the pump to start and run dry until reprimed with water. This can cause slurping and gurgling noises. Correctly install your drain line to prevent a siphon from occurring.
LED lights flash	Immediately on initial power-up the pumps will always have a LED start sequence 5x and then go into standby (blinking green). This is normal operation. This LED start sequence is the only indication of whether the alarm is currently configured for Default Mode or Peripheral Mode. The alarm relay is user configurable and can be changed back and forth. (See wiring diagram instructions).
3 red & 3 green LED flashes	This is the pump reconfigure code. The pump is asking for help! If it has had 3 consecutive long run cycles where it went from standby mode all the way into alarm mode, it is asking to be re-configured for more power as its current dip-switch power settings are too low for the incoming water flow, lift or both. Give it more power by reconfiguring the dip-switch settings. This reconfigure code will only appear after 3 consecutive long run cycles that went into alarm mode.

Replacement parts and accessories



HSG-4065/4
Stop-Siphon Device, 4 pcs.
Part No 3004065

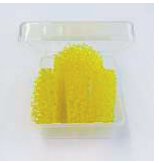

FIL-4063/4
Filter, 4 pcs.
Part No 3004063



FUS-4050/10
Fuses 5x20 10A, 10 pcs.
Part No 3004050



KIT-4087
Star tube with Stop-Siphon device
Part No 3004087

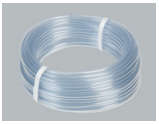

PVC-TUBE
Plastic tube 6 mm (1/4”),
minimum 30 meters
Part No 4679160

Appendix

Corrected flow based on installation L/Hr. 1/4” (6mm) discharge tube @ full power

A	B	C				
		Total Length (Run) Meters				
Suction (lift)	Discharge (Rise) m	5	10	15	20	30
0.0 m	0	42	42	40	40	40
	1 (3.3ft.)	42	42	40	40	36
	3 (9.9 ft.)	37	37	35	35	34
	5 (16.4 ft.)	31	30	29	29	29
	10 (32.8 ft.)	17	16	15	14	14
	15 (49.2 ft.)	9	9	9	9	8
	20 (65.6 ft.)				8	7
1.0 m (3.3 Ft)	0	42	42	42	40	40
	1 (3.3ft.)	42	42	42	40	39
	3 (9.9 ft.)	36	36	35	35	34
	5 (16.4 ft.)	30	30	29	29	29
	10 (32.8 ft.)	16	16	16	16	15
	15 (49.2 ft.)	10	10	10	10	10
	20 (65.6 ft.)				7	9
2.0 m (6.6 Ft.)	0	35	35	35	35	34
	1 (3.3ft.)	33	33	33	32	31
	3 (9.9 ft.)	33	32	31	31	30
	5 (16.4 ft.)	27	26	26	26	25
	10 (32.8 ft.)	17	17	16	16	15
	15 (49.2 ft.)	10	10	10	9	9
	20 (65.6 ft.)				5	5
3.0 m (9.9 Ft.)	0	30	30	30	30	29
	1 (3.3ft.)	28	28	28	28	27
	3 (9.9 ft.)	28	28	28	27	26
	5 (16.4 ft.)	23	23	23	23	22
	10 (32.8 ft.)	15	15	15	15	15
	15 (49.2 ft.)	7	7	6	5	5

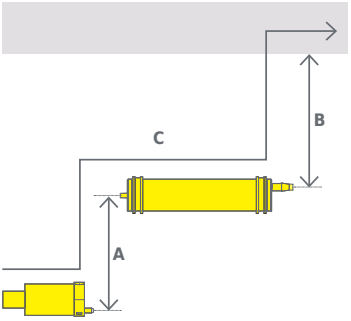

Conversion formula for US Gallons/Hr:

_____ L/Hr. x 0.264 = _____ G/Hr.

INSTRUCTIONS

HVAC/R
Service Products

REFCO

REFCO Manufacturing Ltd.
Industriestrasse 11
6285 Hitzkirch - Switzerland

Telefon +41 41 919 72 82
Telefax +41 41 919 72 83

info@refco.ch
www.refco.ch

2719/3004148