RECTORSEAL

A CSW Industrials Company

PRODUCT DATA SHEET

SAFE-T-SWITCH® SS500EP

For primary drain pan



Description

Safe-T-Switch® Model SS500EP electronic overflow switch is installed on primary drain par when plenum rating is needed. Small size and slim profile great for use on commercial rooftop downflow units. The SS500EP's logic circuit continuously samples the probes for water and shuts down the system if water is detected.

Component List:

(1) Central processing unit
(2) 4P Probe
(3) Reset instruction tag
(4) Warning Sticker (not shown)

Installation Instructions:

Notice: Failure to read and comply with all warnings, cautions and instructions prior to starting installation may cause personal injury and/or property damage and void the warranty.

Warning: Disconnect power to unit at main panel prior to performing electrical work. If not present, it is recommended that an inline fuse be installed to protect the 24 VAC circuit.

INSTRUCTIONS

PRIMARY PAN INSTALLATION (see Fig. 1):

1. Route the plenum rated wire and sensor into the plenum space using the HVAC system manufacturer's supplied raceway or conduit.
2. If necessary, remove the bracket from the sensor before routing.
3. Clip the bracket onto the side of the pan where water level is the highest and press firmly in place, positioning the wires up and probes down.
4. Adjust the sensor height by pushing the sensor into the bracket. The bracket is a one-way ratchet mechanism. If the sensor is set too low in the pan, push the sensor from the lead side until it disengages from the bracket, then reset.
5. Adjust the sensor so that the probes are below the rim of the pan.
6. The switch will trip when the water level reaches the probes.

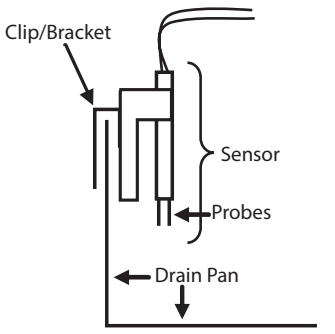

Figure 1: Installation on drain pan

Packaging

Code	Size	Qty. per Case	Lbs. per Case	Cubic Ft per Case
97693	Safe-T-Switch SS500EP	24	71	1.11

WIRING

⚠ WARNING 1. Disconnect power to unit at main panel prior to performing electrical work. 2. If not present, it is recommended that an inline fuse be installed to protect the 24-volt circuit. 3. Connect "power" (black) wires to 24 VAC power supply terminal. 4. Locate the 24-volt thermostat cable entering the air handler unit. 5. Disconnect or cut the red wire and connect to "common" (gray) switch lead using wire nut. Connect "NC" (purple) switch lead to air handler terminal. Incorporating switch in red circuit shuts down entire unit. If placed in the yellow circuit, fan continues to run (inhibits mold during long absences).

*This is general wiring instruction for Normally Closed (NC) cirucuits. For Normally Open (NO) switching, use "Common" (gray) and "NO" (orange) switch leads. Read air handler installation manual for the shut-off signal type (i.e. NC or NO) and signal terminal locations.

Note: The CPU is plenum rated but the lead is not and must remain outside of plenum space!

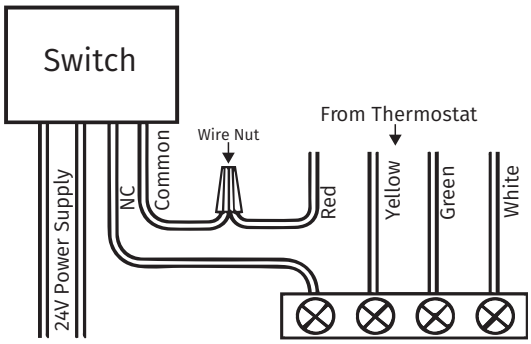

Figure 2: Wiring Diagram for Unit Shutdown

SPECIFICATIONS

24 VAC, 5 Amp. Switching Capacity, Class 2, 12", 18 AWG Lead Wires, 72" plenum rated tail.

c UL us
LISTED
IND. CONT. EQ.
25XE
UL 508
UL 2043

MAINTENANCE

TESTING: (Turn on power to A/C unit)

SWITCH:

1. Once installed and the power is turned on, CPU will display a green LED. If the green LED does not come on, check the "Power" (black) wire connection and voltage. 2. Test the switch by shorting across the probes with wet finger, a metallic conductor or water. If wired correctly, the unit will stop and the red LED will come on after about 5 seconds. When released, after about 5 seconds the red LED will go off, the green and amber LEDs will come on and the A/C unit will restart. The amber LED will be turned off automatically in about 4 days. To turn off amber LED manually, see reset instruction tag on probe wire.

SENSOR POSITION:

3. Test the sensor position: Test the sensor position by turning on the A/C unit to produce a normal condensate flow. If the sensor is too low, the switch will activate and shut down the unit. Next, block the drain to allow the pan to fill with water. The switch should activate before the pan overflows. If necessary, adjust the sensor as described above.

IMPORTANT SAFETY INFORMATION:

⚠ WARNING **1.** This device must be installed strictly in accordance with manufacturer's instructions (to ensure proper operation) and in accordance with all applicable local plumbing, drainage and electrical codes.

⚠ WARNING **2.** Electric shock hazard. Disconnect power supply before installing this product to avoid electrical shock and/ or equipment damage. Use in Class 2 (thermostat) circuit only, not to exceed 24-volts, 1.25 amps to avoid damage or fire hazard.

⚠ CAUTION **1.** This device will not detect clogs occurring upstream from the installation point.

⚠ CAUTION **2.** If not present, it is recommended that a fuse and time delay be installed, to protect the 24-volt circuit and avoid rapid cycling of equipment, prior to installing this product.

⚠ CAUTION **3.** This product is intended for use in water only. Not for use in the presence of flammable liquids or vapors.

⚠ CAUTION **4.** Refer to the appropriate HVAC equipment operation manual prior to installing this product.

⚠ CAUTION **5.** Do not use on dual compressor systems.

Safe-T-Switch SS500EP Assembly

SIZE	DRAWING		REV	SCALE	WEIGHT
	Number	Date			
A	ASB00208	8/15/2016		1:2	--

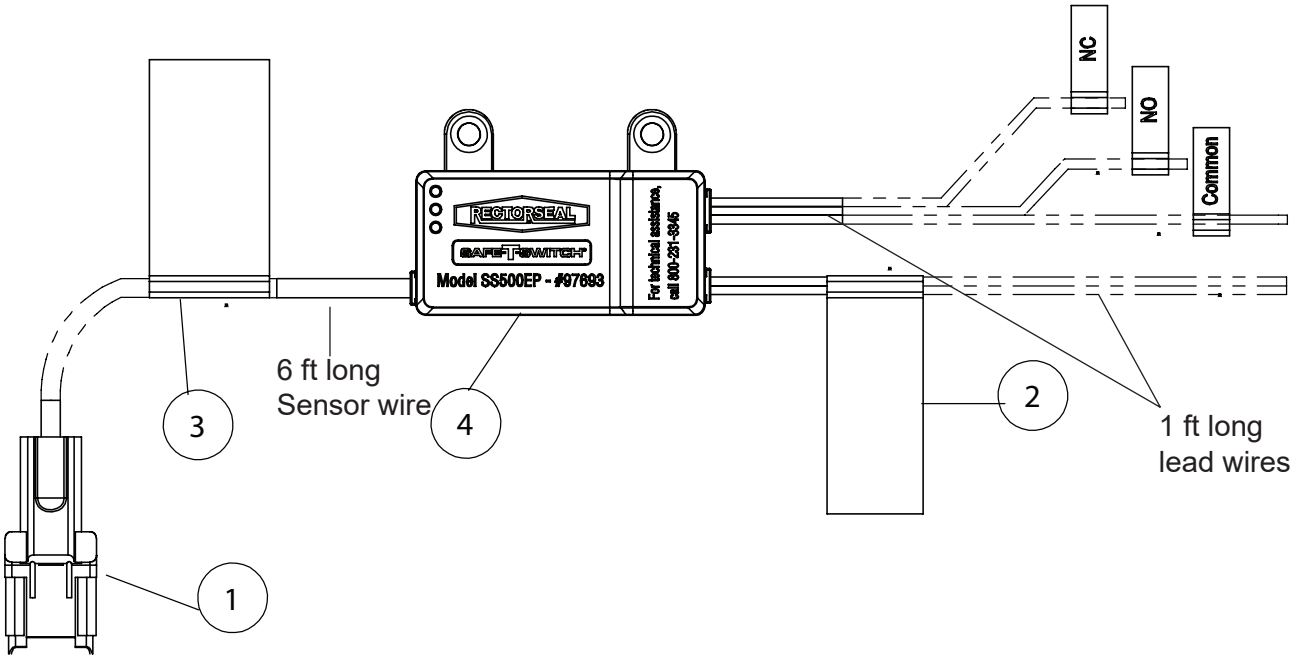

Item No.	Part Number	Description	Quantity
1	---	SE-4P Probe	1
2	---	UL tag, SE-4P & CP-1P	1
3	---	Reset Instruction tag	1
4	---	Central Processing Unit CP-1P	1

The information contained in this drawing is the sole property of RectorSeal. Any reproduction in part or as a whole without the written permission of RectorSeal is prohibited.

Limited Warranty

RectorSeal, LLC makes the Limited Express Warranty that when the instructions for storage and handling of our products are followed we warrant our products to be free from defects. THIS LIMITED EXPRESS WARRANTY IS EXPRESSLY IN LIEU OF ANY OTHER EXPRESS OR IMPLIED WARRANTIES, INCLUDING ANY IMPLIED WARRANTY OF MERCHANTABILITY OR FITNESS FOR A PARTICULAR PURPOSE, AND OF ANY OTHER OBLIGATION ON THE PART OF RectorSeal, LLC. The sole remedy for breach of the Limited Express Warranty shall be the refund of the purchase price. All other liability is negated and disclaimed, and RectorSeal, LLC shall not be liable for incidental or consequential damages.

Manufactured by

RectorSeal, LLC

2601 Spenwick Drive • Houston, TX 77055, USA • 800-231-3345 • Fax 800-441-0051 • rectorseal.com

A CSW Industrials Company. RectorSeal, the logos and other trademarks are property of RectorSeal, LLC, its affiliates or its licensor's and are protected by copyright, trademark and other intellectual property laws, and may not be used without permission. RectorSeal reserves the right to change specifications without prior notice. ©2021 RectorSeal. All rights reserved. R50109-0721