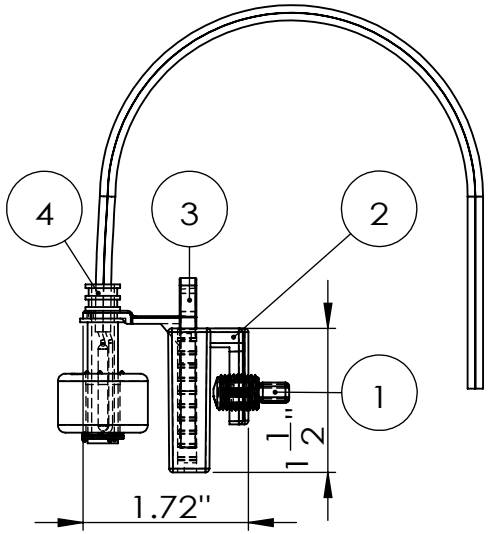

		UNLESS OTHERWISE SPECIFIED:		NAME	DATE
		DIMENSIONS ARE IN INCHES TOLERANCES: FRACTIONAL ±1/16 ANGULAR: ±1° X.X ±.1 X.XX ±.01 X.XXX ±.005 X.XXXX ±.0005	DRAWN	Jun Luo	6/15/2020
			CHECKED		
			ENG APPR.		
			MFG APPR.		
		INTERPRET GEOMETRIC TOL. PER: ANSI Y14.5M-1994	Q.A.		
		MATERIAL White PVC/Gray CPVC	COMMENTS:		
NEXT ASSY	USED ON	FINISH Glossy			
APPLICATION		DO NOT SCALE DRAWING	THIRD ANGLE PROJECTION		

RECTORSEAL

TITLE:

SIZE	DWG. NO.	REV
A	FAB00180	01-003-A

SCALE: 1:1 | WEIGHT: | SHEET 1 OF 1

PROPRIETARY AND CONFIDENTIAL

THE INFORMATION CONTAINED IN THIS DRAWING IS THE SOLE PROPERTY OF RECTORSEAL. ANY REPRODUCTION IN PART OR AS A WHOLE WITHOUT THE WRITTEN PERMISSION OF RECTORSEAL IS PROHIBITED.

5 4 3 2 1