DIVERSITECH®

Mini-Split® Pump

Condensate Removal Pump

Installation Instructions



CP-M115
CP-M230

Description

Due to its small size the DiversiTech Mini-Split Pump is easy to use in all ductless systems (ceiling, wall or floor-standing) with a cooling capacity of 34,000 btu/hr or less. The Mini-Split® Pump comes in 2 modules:

- pump module (pump + control circuits)
- tank reservoir (3 level float: Pump shut-down, Pump start-up and alarm.)

Technical Data

Liquid type:	condensate water from mini-split system - maximum 35°C/95°F
Power Supply	115 V 60 Hz or 230 V 50/60 Hz
Consumption	19 W
Rating	70% duty cycle (ex: 7 sec.ON/3 sec. OFF)
Working temperature	41°F to 113°F - 5°C to 45°C
Storage temperature	37°F to 158°F - 3°C to 70°C
Class	class 1 appliance
Capacity	4 GPH @ zero head, 1.3 GPH @ 20 ft head
Maximum discharge	see Flow Rate Chart
Maximum suction	6.6 ft
Thermal protection	yes – with auto-restart
Ingress Protection	IP64
Noise level	**< 21 dBA* at 3.3 ft distance**

*= Average level pressure at 3.3 ft, calculated on acoustic power level Lwad = 32.80 dBA (ref 1pw) NF EN Iso 3744 standards

Installation

This pump must not be installed in zones of air circulation.

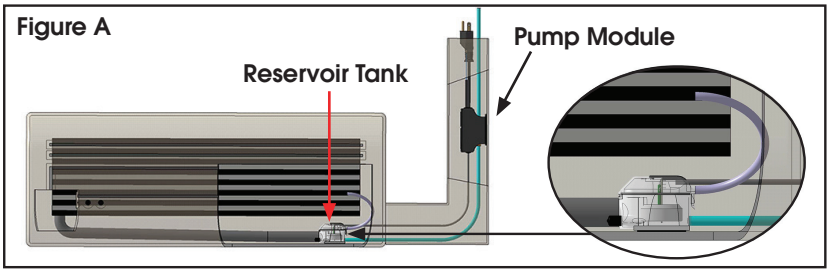

The power must be connected to a different source than air unit. Disconnect power before installation. Only use the supplied cables.

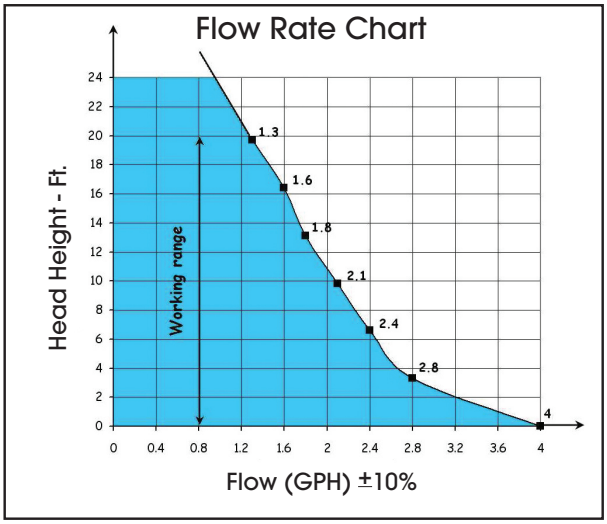

Alarm to mains connections

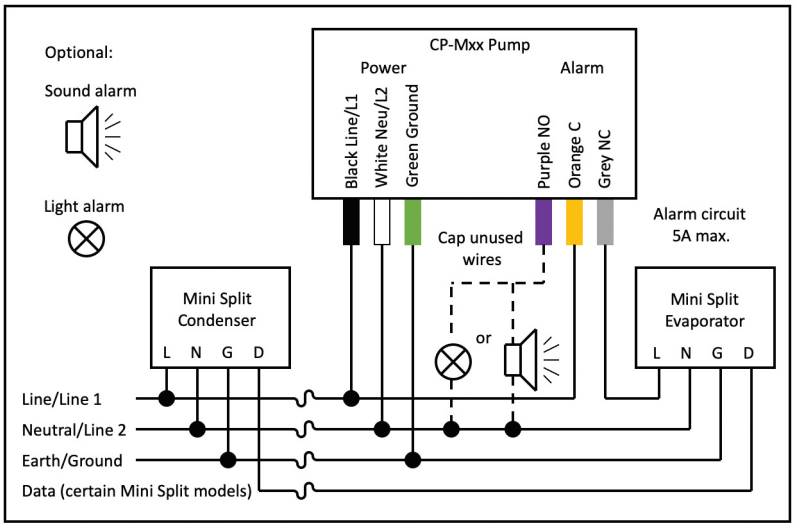

Installation of the pump module

Disconnect the power supply before installation. The pump module may be installed in the mini-split unit, in a lineset cover like SpeediChannel™ (See Figure A) or in a false ceiling. Double-sided adhesive foam tape is provided for that purpose. A space must be left around the pump module for it to cool in the event of prolonged operation. The pump module should not be insulated. The discharge tube (not supplied) must have an inside diameter of 1/4" and be used with the 0.16" x 0.25" reducer (supplied). Use the included cable ties to properly secure the discharge hose to the pump. Make sure to observe the flow direction indicated by the arrow on the pump module. White/Neutral, Black/Line, Green/Ground

⚠ **WARNING: Non-submersible Pump**

The discharge tube (not supplied) of the pump module must always be higher than the tank reservoir and must have an inside diameter of 1/4" in order to prevent siphoning. Connect the 1/4" discharge tube to the 0.16" x 0.25" reducer (supplied).

Risk of Electric Shock - This pump has not been tested for use in swimming pool or marine applications. To reduce risk of electric shock, install with all electrical components above the top grade level of the pump. This pump is not submersible. For indoor use only.

The alarm

Consisting of: Common(C)/Orange, Normally open(NO)/Purple and, Normally closed(NC)/Grey.
The switch is rated to 5A max. Use normally open (NO) to activate audible or light alarm to signal potential overflow. Use normally closed (NC) to shut off unit power to prevent further condensate generation.

CONNECTION OF THE OVERFLOW SWITCH IS MANDATORY. FAILURE TO DO SO WILL INVALIDATE MANUFACTURER'S WARRANTY AND MAY INDUCE FLOODING AND WATER DAMAGE. ALSO NOTE THAT THE OVERFLOW SWITCH IS ELECTRONIC AND DRAWS ITS POWER DIRECTLY FROM THE PUMP, SO THE SWITCH ITSELF CANNOT OPERATE UNLESS THE PUMP IS POWERED.

Installation of the tank reservoir

The tank reservoir must be connected to the pump using the supplied 4-conductor cable and connectors. The supplied flexible elbow may be used to connect the inlet of the tank reservoir to the air conditioner condensate tray. Connect the supplied 6.6 ft long flexible tubing (0.2" ID) to one of the tank reservoir outlets. Ensure the black cap is installed on the unused tank outlet. Connect the supplied 6" long vent tubing (0.16" ID) to the vent port on the tank reservoir lid. Extend the vent tube upwards, ensuring that it maintains a position above the level of the tank.

The tank reservoir must be installed and fastened in a horizontal position with the mounting clip (supplied) in **a dry location**. Choose the most appropriate place and plug the outlet not being used with the black cap.
- Before plugging the connectors, check they are clean, dry and not live.
- Connect the 4-conductor plug and receptacle while aligning the arrows

Operation

Ensure that the tank is installed so that the alarm will activate before the condensate tray overflows (top of tank is below rim of condensate tray). Before finishing the installation, it is recommended that you test the correct operation of the condensate removal pump.
- Never try to run the pump "dry" without water (may damage the pump)
- Rinse the condensate water tray thoroughly to eliminate all metallic particles and foreign bodies.
- Ensure that the reservoir tank is connected to the condensate tray to collect the condensate from the mini-split unit.
- Pour water into the condensate tray of the air conditioner.
- Check to ensure the pump starts, pumps water, then stops.
- Test the alarm by pouring water in at a rate faster than the pump discharge until the float activates the pump alarm.

Maintenance

Any maintenance on the condensate pump **MUST BE DONE WITH THE POWER SUPPLY SWITCHED OFF.**
At the beginning of the season, or regularly if the mini-split unit is used all year long:
Remove the cap of the tank reservoir, the filter and the magnet. Clean inside the tank reservoir and the float with water containing 5% bleach.
Ensure that the rubber seal is installed and seated properly in the tank lid, install the float with the magnet facing upward, and replace the filter. Replace the tank lid and do a full operational test.

Safety

- DiversiTech strongly recommends connecting the high-level alarm cable to a light or audible alarm.
- The pump module features a thermal cut-out set at 70°C with AUTO-RESET.
- Ensure that the ground wire of the pump is connected properly.
- Conforms to UL STD 778 certified to CAN/CSA STD C22.2 NO. 108 Recognized ETL.

Mini-Split® Pump Recommendations

1. Please read instructions carefully.

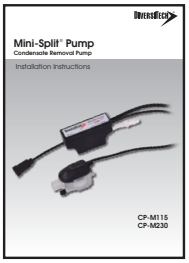

2. Rinse heat exchanger, water tank of the air conditioner with water.

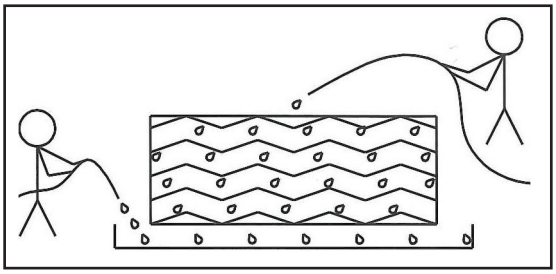

3. Acceptable positions for tank reservoir.

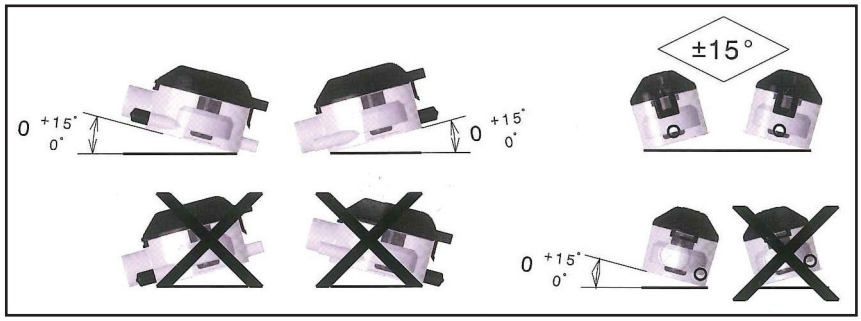

4. Position the vent tube upward.

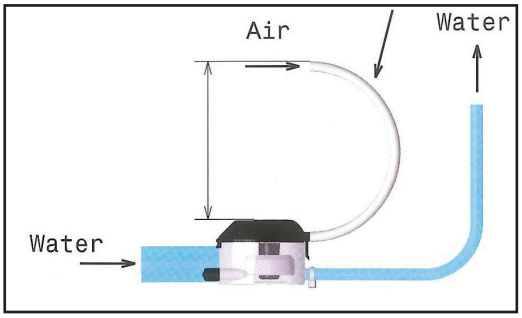

Black cap must be fitted on the unused outlet.

5. Tighten clamps.

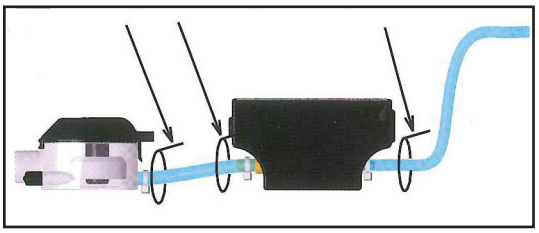

6. Position the float magnet upward.

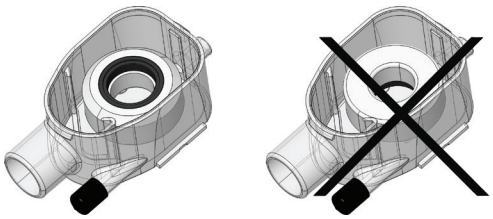

7. Alarm connection: See wiring diagram
Breaking capacity: 5A Max. (resistive load)
Mains 110-120V - 60 Hz or 220-240V - 50/60Hz

CAUTION! Never run the pump without water. This can destroy or decrease the pump performance

8. Negative discharge not allowed.

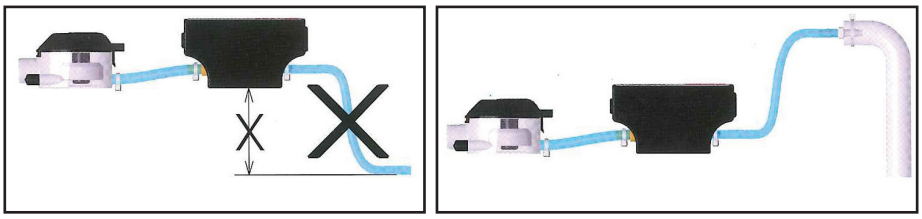

Warranty

All pumps manufactured by or for DiversiTech Corporation (the Company) and sold by the Company under the DiversiTech brand are warranted to be free of defects in workmanship and materials for a period of 24 months from date of sale from the distributor to the contractor. The Company will credit, repair or replace, at its option, any Pump if deemed defective within this time period. All products returned to the Company must include a return authorization issued by the Company. The returned product should be suitably packaged and shipped prepaid from the point of shipment to the point designated in the Company's return authorization.

This warranty is a limited warranty and shall be in lieu of any other warranties, expressed or implied, including, but not limited to, any implied warranty of merchantability or fitness for a particular purpose. There are no other warranties that extend beyond the description of the face hereof. The liability of the Company arising out of it's supply of said products, or their use shall not in any case exceed the cost of correcting defects in the products as set forth above. The Company shall not be liable for any costs or damage incurred by its customers in the removal or replacement of defective products from units in which the products have been assembled. In no event shall the company be liable for loss of profits, indirect, consequential, or incidental damages.

Diversitech Corporation
3039 Premiere Parkway
Suite 600
Duluth, GA 30097
800.995.2222
FAX 770.953.8600

DOC49689
©2020 DiversiTech Corporation