SAFE–T–SWITCH® MODEL SS2AP

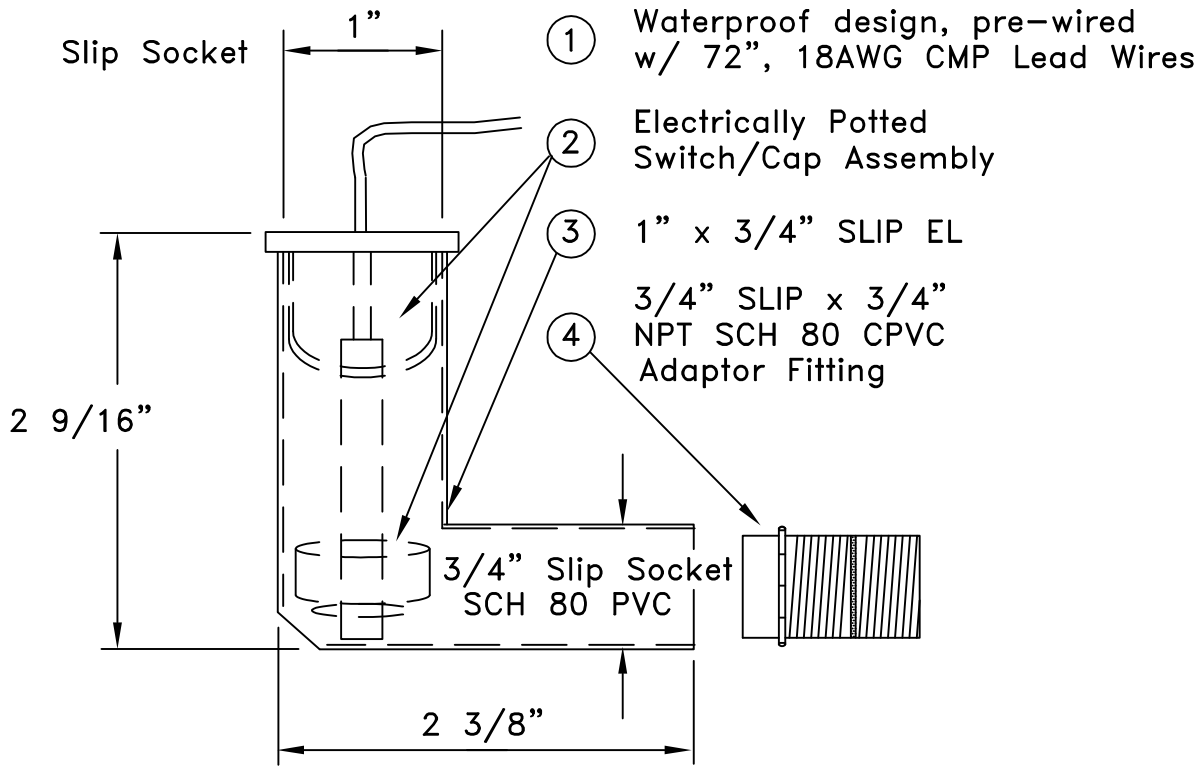

COMMENTS/REQUIREMENTS:

* Potted, electrically water sealed reed/magnet switch design.
* UL508 and UL2043 Compliant
* Schedule 80 CPVC components.
* 24 VAC
* 1.25 Amp switching capacity

RECTORSEAL

SAFE–T–SWITCH MODEL SS2AP
3/4" Closed Coupled Plenum–rated
Condensate Drainpan Overflow Kit

UL LISTED E209344 IND. CONT. EQ 75MF

© All Rights Reserved Rectorseal 2012

Rectorseal Corporation 2601 Spenwick Houston, TX 77055 (800) 231–3345 Fax. (800) 452–2824