RECTORSEAL

A CSW Industrials Company

PRODUCT DATA SHEET

SAFE-T-SWITCH® SS3

For primary and auxiliary drain pans

Description

Safe-T-Switch® Model SS3 specially designed mounting bracket mounts firmly over the edge of most drain pans. The patented magnetic reed switch and slim profile can be installed on primary or auxiliary drain pans. The SS3 switch is easily removed for cleaning and servicing.



US Patent No. 6,698,215

Component List: (See page 3)

(1) Bracket

(2) Stem assembly (includes Float, Tag, and Stem with wire)

(3) Thumb Screw (with 5/16 UNF thread)

(4) Warning Sticker (not shown)

Specifications

24-Volts A/C, Maximum 1.25 Amp. Carrying Capacity, 6ft., 18 AWG Lead Wires.

CLASSIFIED c UL us LISTED
IND. CONT. EQ.
75MF
UL 508

Maintenance

Inspect, clean and test this device at least every 30 days and following every cleaning of the drain line. **1.** Clear debris or any other obstacles around the Stem Subassembly. **2.** Check for any damage. If damage is observed, replace this product with a new one. **3.** Test switch function by following Step 6-7 in the "AUXILIARY DRAIN PAN INSTALLATION" section below. If this product failed function test, replace it with a new one.

Wiring

⚠ WARNING **1.** Disconnect power to A/C unit at the main panel prior to performing electrical work. **2.** If not present, it is recommended that an inline fuse be installed to protect 24-volt circuit and time delay be configured to avoid rapid cycling of equipment. **3.** Locate the 24-volt thermostat cable entering the air handler unit. **4.** Disconnect or cut the red wire and connect to switch lead using wire nut. Connect other switch lead to air handler terminal. Incorporating switch in red circuit shuts down entire unit. If placed in the yellow circuit, fan continues to run (to inhibit mold growth during long absences.) **5.** Do not leave wire resting in pan or where water may collect. **6.** Reconnect power to the A/C unit.

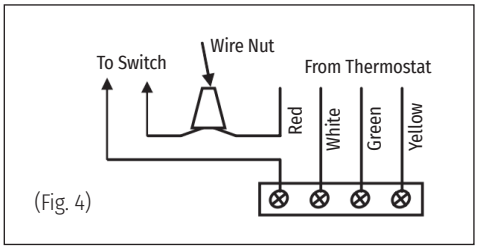

(Fig. 4)

Packaging

Code	Size	Qty. per Case	Lbs. per Case	Cubic Ft per Case
97089	Safe-T-Switch SS3	24	5	0.73

(Fig.1)

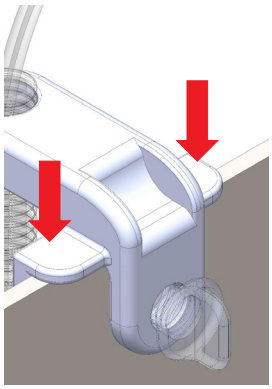

(Fig.2)

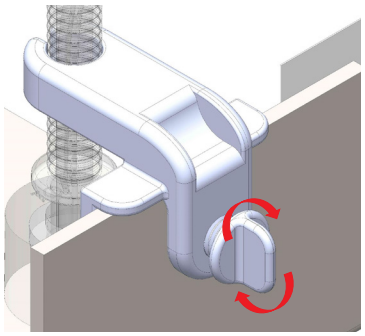

(Fig.3)

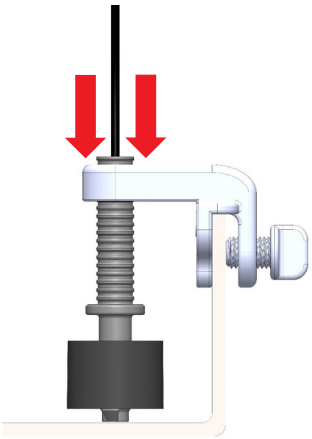

Installation Instructions:

Notice: Failure to read and comply with all warnings, cautions and instructions prior to starting installation may cause personal injury and/ or property damage and void the warranty.

AUXILIARY DRAIN PAN INSTALLATION (Works with 1-2" deep drain pans):
1. Disconnect power to air conditioner (A/C) unit at main panel. **2.** Clip Bracket onto the side of the auxiliary drain pan at the lowest end (Fig 1). **3.** Secure the Thumb Screw until the Bracket is firmly attached to the pan (Fig 2), ensuring switch wires are positioned up. Float should move freely. **4.** It is recommended to push the Stem to the bottom position for the most sensitive water detection (Fig 3). Ensure Stem Subassembly is firmly secured to the bracket. **5.** Wire the switch per instructions under WIRING (Fig. 4). **6.** Test the switch by lifting the Float while the unit is running. If wired correctly, the A/C unit will stop. **7.** Test switch sensitivity: Fill pan with water. Float should rise and A/C unit should stop before pan overflows. If sensitivity needs to be adjusted, move the Stem Subassembly up or down accordingly. **8.** Place the included Warning Sticker on a visible surface, such as the air handler or condenser unit.

IMPORTANT SAFETY INFORMATION:

⚠ WARNING **1.** This device must be installed strictly in accordance with manufacturer's instructions (to ensure proper operation) and in accordance with all applicable local plumbing, drainage and electrical codes.

⚠ WARNING **2.** Electric shock hazard. Disconnect power supply before installing this product to avoid electrical shock and/ or equipment damage. Use in Class 2 (thermostat) circuit only, not to exceed 24-volts, 1.25 amps to avoid damage or fire hazard.

⚠ CAUTION **1.** This device will not detect clogs occurring upstream from the installation point.

⚠ CAUTION **2.** If not present, it is recommended that a fuse and time delay be installed, to protect the 24-volt circuit and avoid rapid cycling of equipment, prior to installing this product.

⚠ CAUTION **3.** This product is intended for use in water only. Not for use in the presence of flammable liquids or vapors.

⚠ CAUTION **4.** Refer to the appropriate HVAC equipment operation manual prior to installing this product.

⚠ CAUTION **5.** Do not use on dual compressor systems.

Safe-T-Switch SS3 Assembly

SIZE	DRAWING		REV	SCALE	WEIGHT
	Number	Date			
A	ASB00454	5/8/2020	01-001-A	1:2	--

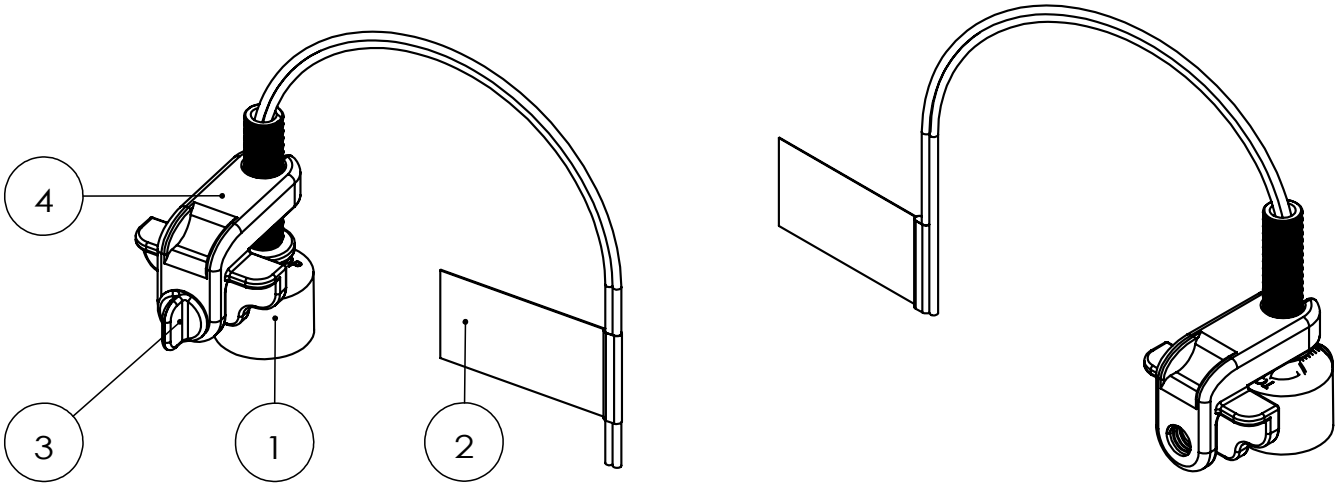

Item No.	Part Number	Description	Quantity
1	ASB00452	Stem Assembly	1
2	FAB01292	SS3 Tag	1
3	FAB01293	Thumbscrew	1
4	FAB01294	SS3 Body	1

The information contained in this drawing is the sole property of RectorSeal. Any reproduction in part or as a whole without the written permission of RectorSeal is prohibited.

Limited Warranty

3YR LIMITED WARRANTY

For more information on our product limited warranty, visit RectorSeal.com

Manufactured by

RectorSeal, LLC

2601 Spenwick Drive • Houston, TX 77055, USA • 800-231-3345 • Fax 800-441-0051 • rectorseal.com

A CSW Industrials Company. RectorSeal, the logos and other trademarks are property of RectorSeal, LLC, its affiliates or its licensors and are protected by copyright, trademark and other intellectual property laws, and may not be used without permission. RectorSeal reserves the right to change specifications without prior notice. ©2021 RectorSeal. All rights reserved. R50109-1221