2-ROCKER & 3-ROCKER SWITCHES

WARNING

ALL ELECTRICAL WORK MUST BE DONE IN ACCORDANCE WITH LOCAL CODES, ORDINANCES, OR NATIONAL ELECTRICAL CODE AS APPLICABLE. **FOR SAFETY,THIS PRODUCT MUST BE INSTALLED IN A GROUNDED SWITCH BOX.** IF YOU ARE UNFAMILIAR WITH METHODS OF INSTALLING ELECTRICAL WIRING, SECURE THE SERVICES OF A QUALIFIED ELECTRICIAN.

Turn off power and lock out service panel before installing or wiring this product.

Use this control only with copper or copper-clad wire. Do not use aluminum wire with this device.

INSTALLATION

1. **WARNING**

   To avoid fire or electrical shock, turn off power at circuit breaker or fuse. Test that the power is off before wiring.

2. **MOUNT THE SWITCH BOX**

   For 2-Rocker Switch: Install a 3½" deep single-gang switch box or a 2" deep double-gang switch box.

   For 3-Rocker Switch: Install a 2½" deep double-gang switch box with a single device adapter plate.

3. **ATTACH POWER CABLE**

   Clamp wiring to switch box and unit using appropriate clamp. Provide 6" leads inside box and fan for easier wiring.

4. **CONNECT WIRING**

   General instructions for all configurations:

   Make sure both the switch box and the appliance are properly grounded.

   Make sure ground wire is securely fastened to control's ground screw. Tighten ground screw 14 to 16-in. lbs. torque.

   Remove insulation per strip gauge on control (approx. 5/8"). Use proper wire nut sizes for number and size of wires.

   For push-in terminals: Use #14-AWG solid copper wire only.

   For screw terminals: Use #12 or #14-AWG solid copper wire only. Tighten screw terminals 14 to 16-in. lbs. torque.

Choose 4A., 4B. or 4C

4A. When using 2-Rocker or 3-Rocker Switch to turn an appliance ON & OFF:

Make electrical connections following appropriate diagram.

(over)

WARNING

To prevent serious injury from electrical shock or damage to electrical components - ***DO NOT WIRE HOT!***

Each individual rocker switch on this control is rated at 15 AMPS, @ 120 VAC. The total load on this control must not exceed 20 AMPS, @ 120 VAC.

Warranty is void if miswired.

NOTE: If the switch has not been wired properly and wires need to be moved, proceed as follows:

WARNING: To avoid fire or electrical shock, turn off power at circuit breaker or fuse. Test that the power is off before wiring.

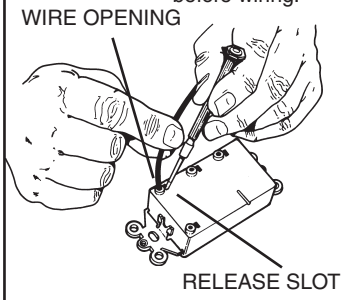

1. Each wire opening has a release slot.
2. Push a small nail or screwdriver into release slot while gently removing wire.
3. DO NOT pull any wire out of the switch without using the release slot. The switch may become damaged.

STEP 4A

2 - ROCKER SWITCH

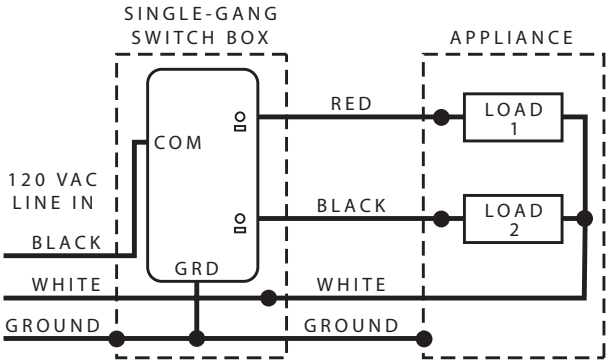

3 - ROCKER SWITCH

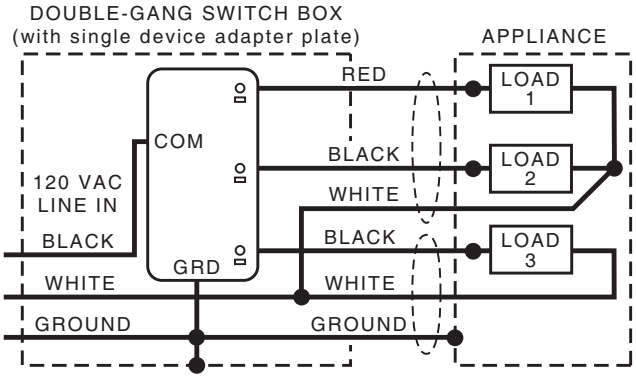

4B. When using a 2-Rocker Switch to turn a range hood ON & OFF from another location with 120 VAC POWER CABLE ENTERING SWITCH BOX:

Remove the range hood's wiring cover. If the hood has a BLACK JUMPER WIRE, it must be cut and the end stripped as shown. (FIG. I)

Use UL approved clamps to secure all cables to hood and box. Make wiring connections following appropriate diagram. Use proper wire nut sizes for number and size of wires. Replace range hood wiring cover.

4C. When using a 2-Rocker Switch to turn a range hood ON & OFF from another location with 120 VAC POWER CABLE ENTERING HOOD:

Remove the range hood's wiring cover. If the hood has a BLACK JUMPER WIRE, it must be cut and the end stripped as shown. (FIG. I)

Use UL approved clamps to secure all cables to hood and box. Make wiring connections following appropriate diagram. Use proper wire nut sizes for number and size of wires. Replace range hood wiring cover.

5. **MOUNT CONTROL IN SWITCH BOX**
Tuck wires into switch box and fasten the control to box using attached screws.

6. **ATTACH SWITCH PLATE**
Fasten the switch plate to the control using the short screws from the parts bag.

* **2-SPEED RANGE HOODS:**
Broan 40000, F40000, 41000, 42000, 43000, 52000, PM250, CBD1, QL1, QML, QS1 & QSE1 Series. NuTone NS6500, NSPM250, RL6200 & WS1 Series.

** **INTERMEDIATE RANGE HOODS:**
Broan 46000 & QT20000 Series. NuTone ACS3 Series.

BROAN-NUTONE ONE YEAR LIMITED WARRANTY

Broan-NuTone warrants to the original consumer purchaser of its products that such products will be free from defects in materials or workmanship for a period of one year from the date of original purchase. THERE ARE NO OTHER WARRANTIES, EXPRESS OR IMPLIED, INCLUDING, BUT NOT LIMITED TO, IMPLIED WARRANTIES OF MERCHANTABILITY OR FITNESS FOR A PARTICULAR PURPOSE.

During this one-year period, Broan-NuTone will, at its option, repair or replace, without charge, any product or part which is found to be defective under normal use and service.

THIS WARRANTY DOES NOT EXTEND TO FLUORESCENT LAMP STARTERS, TUBES, HALOGEN AND INCANDESCENT BULBS, FUSES, FILTERS, DUCTS, ROOF CAPS, WALL CAPS AND OTHER ACCESSORIES FOR DUCTING. This warranty does not cover (a) normal maintenance and service or (b) any products or parts which have been subject to misuse, negligence, accident, improper maintenance or repair (other than by Broan-NuTone), faulty installation or installation contrary to recommended installation instructions.

The duration of any implied warranty is limited to the one-year period as specified for the express warranty. Some states do not allow limitation on how long an implied warranty lasts, so the above limitation may not apply to you.

BROAN-NUTONE'S OBLIGATION TO REPAIR OR REPLACE, AT BROAN-NUTONE'S OPTION, SHALL BE THE PURCHASER'S SOLE AND EXCLUSIVE REMEDY UNDER THIS WARRANTY. BROAN-NUTONE SHALL NOT BE LIABLE FOR INCIDENTAL, CONSEQUENTIAL OR SPECIAL DAMAGES ARISING OUT OF OR IN CONNECTION WITH PRODUCT USE OR PERFORMANCE. Some states do not allow the exclusion or limitation of incidental or consequential damages, so the above limitation or exclusion may not apply to you.

This warranty gives you specific legal rights, and you may also have other rights, which vary from state to state. This warranty supersedes all prior warranties.

To qualify for warranty service, you must (a) notify Broan-NuTone at the address or telephone number below, (b) give the model number and part identification and (c) describe the nature of any defect in the product or part. At the time of requesting warranty service, you must present evidence of the original purchase date.

Broan-NuTone LLC, 926 W. State Street, Hartford, Wisconsin 53027
www.broan.com 800-558-1711

FIG. I

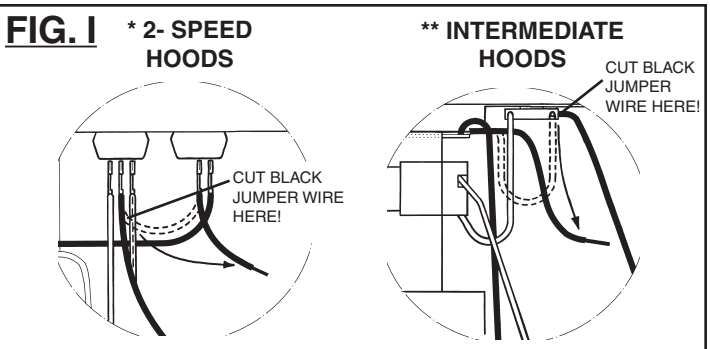

STEP 4B
POWER INTO SWITCH

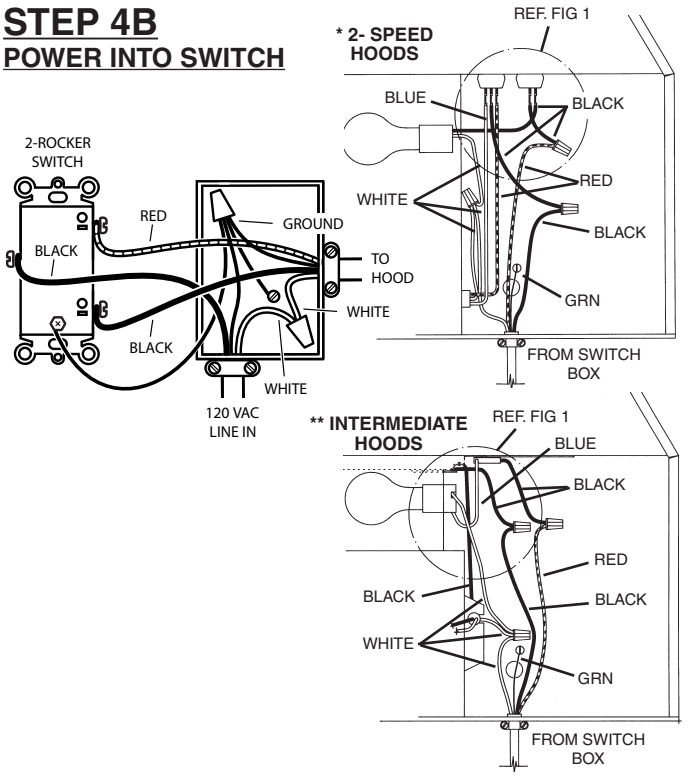

STEP 4C
POWER INTO HOOD

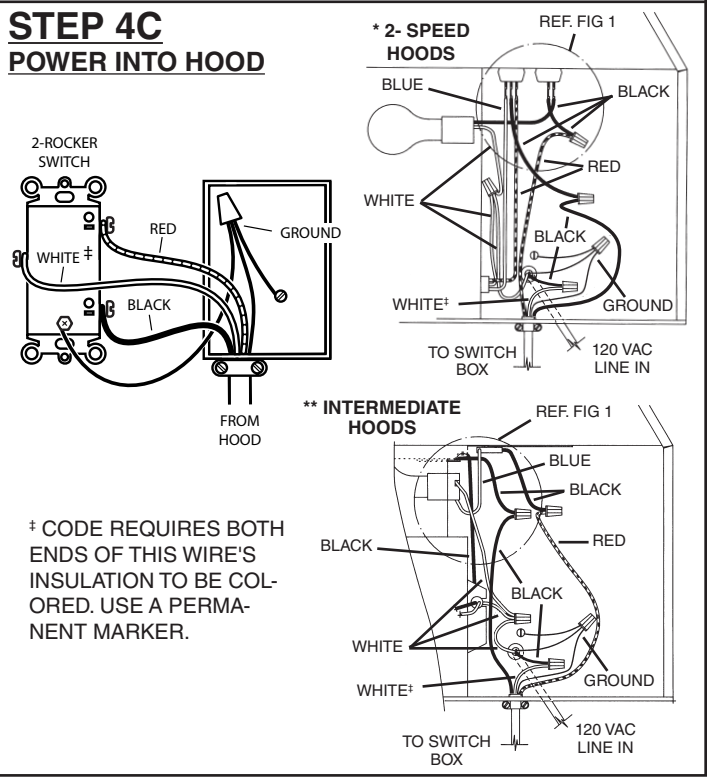

‡ CODE REQUIRES BOTH ENDS OF THIS WIRE'S INSULATION TO BE COLORED. USE A PERMANENT MARKER.