Côr™ Home Automation FireFighter™ Wireless Smoke Alarm Monitor and Relay Device SLX-AD-T3

HOME AUTOMATION
The heart of a smarter home.

Product Data

OVERVIEW

FireFighter™ is an easy and cost-effective solution to connect existing smoke detectors to the Côr Home Automation System wirelessly. FireFighter's unique technology monitors the alarm activity of existing UL smoke detectors. When an alarm is detected, a wireless signal is sent to the control panel. With interconnected hardwired smoke detectors found in most homes today, only one FireFighter is needed to monitor these detectors.



STANDARD FEATURES

- Monitors any UL existing smoke detector
- Does not impact UL or Fire Marshall approval of existing smoke detectors
- Uses one CR123A long-life lithium battery
- FCC, IC and ETL listed in US and Canada to UL 985 standard

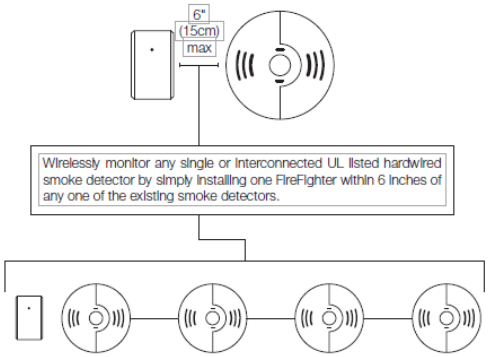

SPECIFICATIONS

Compatibility	Any UL smoke detector including interconnected smoke detectors
Frequency	319.5MHz
Battery	3V lithium CR123A
Battery Life	4 years
Detection Distance	6 in. (15cm) max
Operating Temperature	32°F (0°C) to 120°F (49°C)
Operating Humidity	5-95% non condensing
Supervisory signal interval	64 min. (approx.)
Dimensions (W x H x D)	1.6 x 2.9 x 0.0 in. (4.1 x .7.3 x 0.0 cm)

ORDERING INFORMATION

SLX-AD-T3	FireFighter Wireless Smoke Alarm Monitor and Relay Device

Copyright 2017 Côr Home Automation • P.O. Box 4808 • Syracuse, NY 13221
Edition Date: 04/17

Catalog No: SS-SLX-AD-T3-01

Replaces: NEW

Manufacturer reserves the right to change, at any time, specifications and designs without notice and without obligations.