breez Smart

MODEL SMT-CRD

(Up to 3 hours – **Ceiling Radiation Damper**)

Description

SMT-CRD Ceiling Radiation Damper is UL and cUL listed, and exceeds UL 555C for use in 3-hour fire rated assemblies.
SMT-CRD is also Warnock-Hersey certified for use in fire rated floor/ceiling or roof/ceiling assemblies.

Application

- The SMT-CRD ceiling radiation damper employs a folded curtain style blade for point-of-origin control of radiant heat in a ventilation system
- The SMT-CRD is to be installed horizontally in the ceiling membrane for the floor/ceiling or roof/ceiling assemblies with a re resistance rating up to and including 3 hours
- Ventilation fans shall be ducted out of the plenum space using any UL 181 Class 0 or Class 1 duct
- UL listed as fan/damper assembly for the following Wood Frame Construction designs: L521, L546, L558, L562, L574, L576, L581, L583, L585, P522, P533, P538 and P545.
- Intended for installation with the following UL Listed Delta Electronic Fan Models SMT130, SMT130M, SMT130H, SMT150, SMT150D, SMT150LED, SLM80, SLM100

Features

- Galvanized steel frame and sleeve
- Folded ceramic curtain blade
- 165°F fusible link
- Size: 11 7/8" x 11"
- High temperature, non-asbestos, reinforced fiber thermal fabric

Warranty

- 3-Year limited warranty

Ratings

- UL 555C Fire Resistance Rating: 3 hour (horizontal, for use in 1, 2, or 3 hour rated assemblies)

Listings

- CSFM listing: 3226-0368:104
- UL 555C listing: R27832
- Warnock Hersey listing #: 102195501SAT-002
- Meets NFPA Standards: 90A and 101
- Meets Building Code Standards: IBC, NBC, NFPA, SBC, and UBC

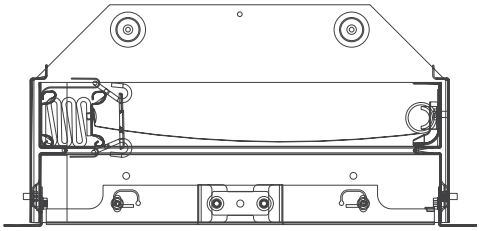

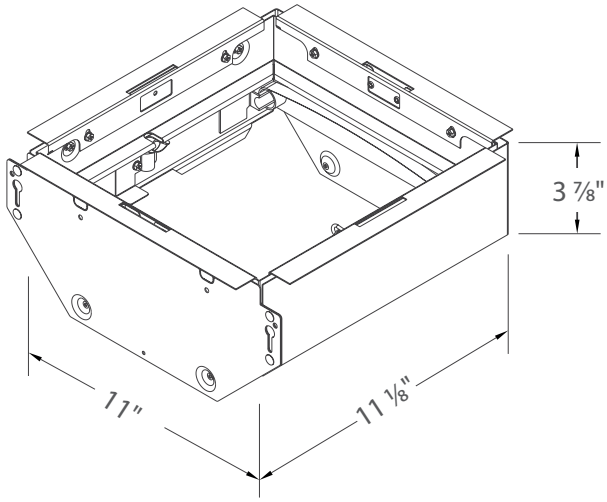

Model	Quantity	Comments	Project:
			Location:
			Architect:
			Engineer:
			Contractor:
			Submitted by:
			Date: