SUBMITTAL RECORD
JOB _____
LOCATION _____
SUBMITTED TO _____
SUBMITTAL PREPARED BY _____
APPROVED BY _____
DATE _____

Submittal Form
VANE AND RAIL

2" Vane & Rail

4" Vane & Rail

DESCRIPTION

Hollow Turning Vane and Vane Rail are designed to redirect the air through elbows and tees in the ductwork without significant loss of air pressure. Assembled Vane & Rail minimizes turbulence in the ductwork.

FEATURES

- Hollow Turning Vane and Vane Rail are designed to redirect the air through elbows and tees in the ductwork without significant loss of air pressure. Assembled Vane & Rail minimizes turbulence in the ductwork.
- Duro Rail has self aligning tabs for easy vane installation.
- 2in. Turning Vane are manufactured from 26-gauge galvanized steel.
- 4in. Turning Vane are manufactured from 24-gauge galvanized steel.
- 2in. and 4in. Vane Rail are manufactured from 24 or 22-gauge galvanized steel.
- All Rail described on this page is a Duro Dyne version of Runner Type 1 as described in Smacna (see drawing below).

Hollow Turning Vane

Item #	Code	Description	Packaging	Weight (lbs.)	Master Skid Qty.
13203	HTV2-2610	26ga. 2in. Turning Vane 10ft.	5-10ft. pcs./Bundle	24	7200ft.
13220	HTV2-10AL	Alum. 2in. Turning Vane 10ft.	5-10ft. pcs./Bundle	13	7200ft.
13224	HTV2-10SS	Stainless 2in. Turning Vane 10ft.	5-10ft. pcs./Bundle	26	7200ft
13207	HTV4-2410	24ga. 4in. Turning Vane 10ft.	5-10ft. pcs./Bundle	55	2500ft.
13222	HTV4-10AL	Alum. 4in. Turning Vane 10ft.	5-10ft. pcs./Bundle	33	2500ft.
13226	HTV4-10SS	Stainless 4in. Turning Vane 10ft.	5-10ft. pcs./Bundle	58	2500ft.

Vane Rail

Item #	Code	Description	Packaging	Weight (lbs.)	Master Skid Qty.
13300	DHVR2-2210	2in. Vane Rail 10ft.	10-10ft. pcs./Bundle	46	4000ft.
13221	HVR2-10AL	Alum. 2in. Vane Rail 10ft.	10-10ft. pcs./Bundle	18	6000ft.
13225	HVR2-10SS	Stainless 2in. Vane Rail 10ft.	10-10ft. pcs./Bundle	30	6000ft.
13302	DHVR4-2210	4in. Vane Rail 10ft.	10-10ft. pcs./Bundle	71	2000ft.
13223	HVR4-10AL	Alum. 4in. Vane Rail 10ft.	10-10ft. pcs./Bundle	36	2000ft.
13227	HVR4-10SS	Stainless 4in. Vane Rail 10ft.	10-10ft. pcs./Bundle	59	2000ft.

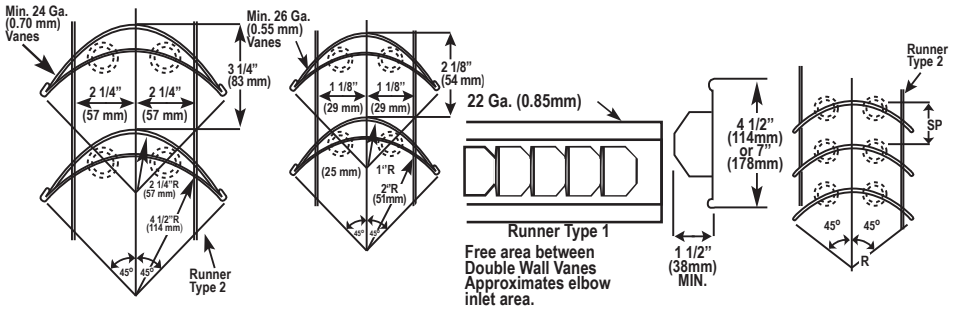

Single Vane Schedule			
	R	SP	GA
Small	2"	1 1/2"	24
	(51mm)	(38mm)	(0.70mm)
Large	4 1/2"	3 1/4"	22
	(114mm)	(83mm)	(0.85mm)

See notes on fig.4-4. Other runners may be used as appropriate. Other vane sizes, spacings or configurations are acceptable on designer approval.

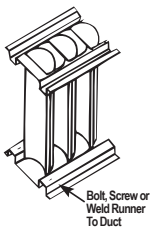

As Described on Figure 4.3/4.4 of the SMACNA HVAC Duct Construction Standards, 3rd Ed., 2005.

Duro Dyne Corporate Headquarters, Bay Shore, NY
631-249-9000 • Fax: 631-249-8346
Duro Dyne Midwest • Duro Dyne West • Duro Dyne Canada
www.durodyne.com • E-mail: durodyne@durodyne.com

©2017 Duro Dyne Corporation

Printed in USA 5/17
BO050003