CODES: MO & OC **CAT NO 580-566**

NOTES:

1. SHAFT DETAIL DRAWING 5F-531
2. COMPRESSOR MAY BE OPERATED IN EITHER DIRECTION OF ROTATION. STANDARD ROTATION IS COUNTER CLOCKWISE LOOKING FROM THE PUMP END; FOR REVERSE ROTATION ROTATE OIL PUMP 180°.
3. NET WEIGHT 1115LBS. INCLUDES OIL BUT NOT REFRIGERANT CHARGE:

	YES	NO
FLYWHEEL	☐	☐
WATER COOLED HEADS	☐	☐
CRANKCASE COVER PLATES FOR COMPRESSOR INTERCONNECTION	☐	☐
_____	☐	☐

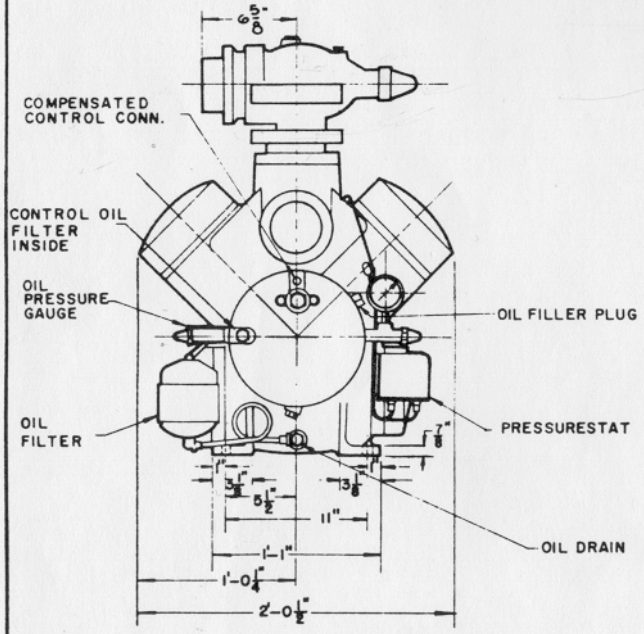

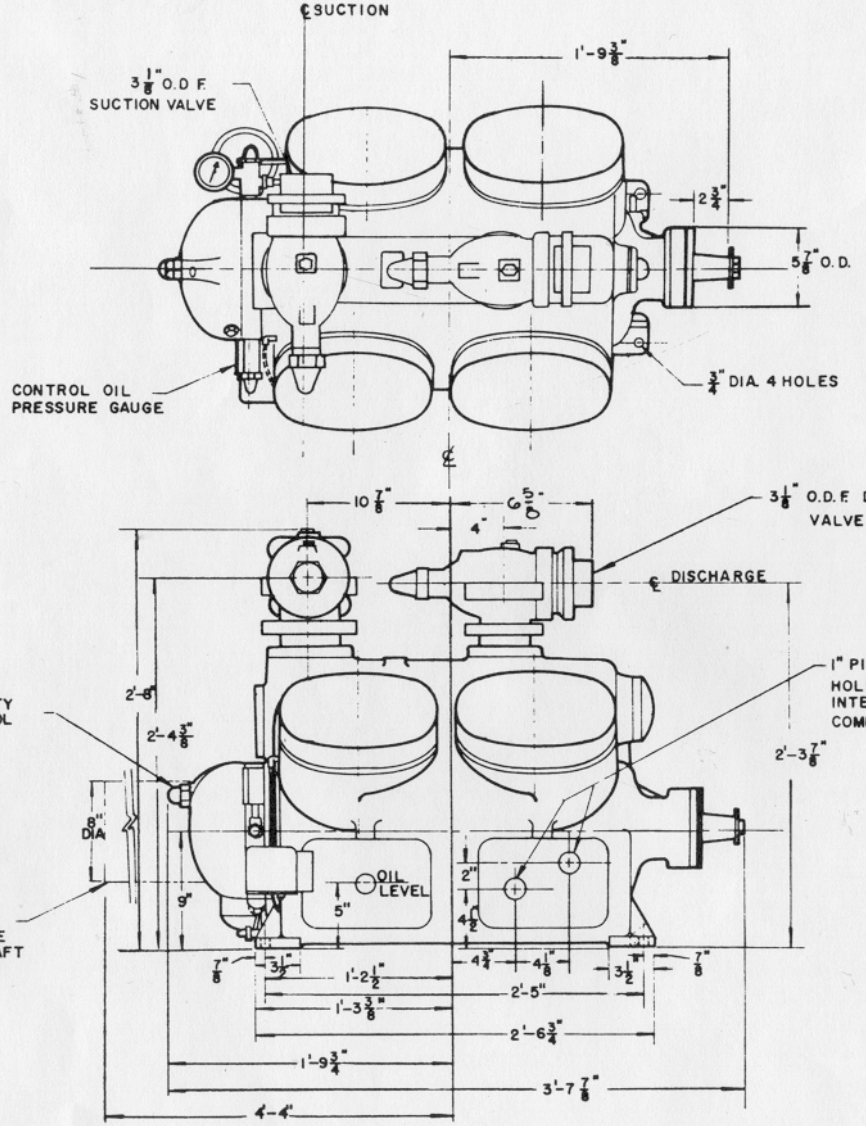

COMPRESSOR

MARK FOR _____

PART NO. _____ TYPE DRIVE: ☐ DIRECT ☐ BELT

RPM _____ DESIGN BHP INPUT _____ MOTOR HP. _____

SAT SUCTION TEMP _____ F. SAT DISCHARGE TEMP _____ F

REFRIGERATION EFFECT _____ TONS. REFRIGERANT NO. _____

JOB NAME _____

JOB LOCATION _____

BUYER _____

BUYER NO. _____ CARRIER NO. _____

DIMENSIONS CERTIFIED BY _____ DATE _____

DATE	SUPERSEDES		REV.
2-12-74	5H-080, DATED 12-1-65 Rev "A"	**COMPRESSOR ASSEMBLY** 5H80 & 5H86	5H-080 B

Carrier

THIS DRAWING IS THE PERSONAL PROPERTY OF CARRIER AIR CONDITIONING COMPANY DIVISION OF CARRIER CORPORATION - SYRACUSE, N.Y. ALL USE IS FORBIDDEN EXCEPT ON ITS WRITTEN CONSENT

5H