CODES: MO & OC CATALOG NO. 580-564

NOTES:

1. SHAFT DETAIL DRAWING 5F-531
2. COMPRESSOR MAY BE OPERATED IN EITHER DIRECTION OF ROTATION. STANDARD ROTATION IS COUNTER CLOCKWISE LOOKING FROM THE PUMP END; FOR REVERSE ROTATION ROTATE OIL PUMP 180°.
3. NET WEIGHT 795 LBS. INCLUDES OIL BUT NOT REFRIGERANT CHARGE.

	YES	NO
FLYWHEEL	☐	☐
WATER COOLED HEADS	☐	☐
CRANKCASE COVER PLATES FOR COMPRESSOR INTERCONNECTION	☐	☐
	☐	☐

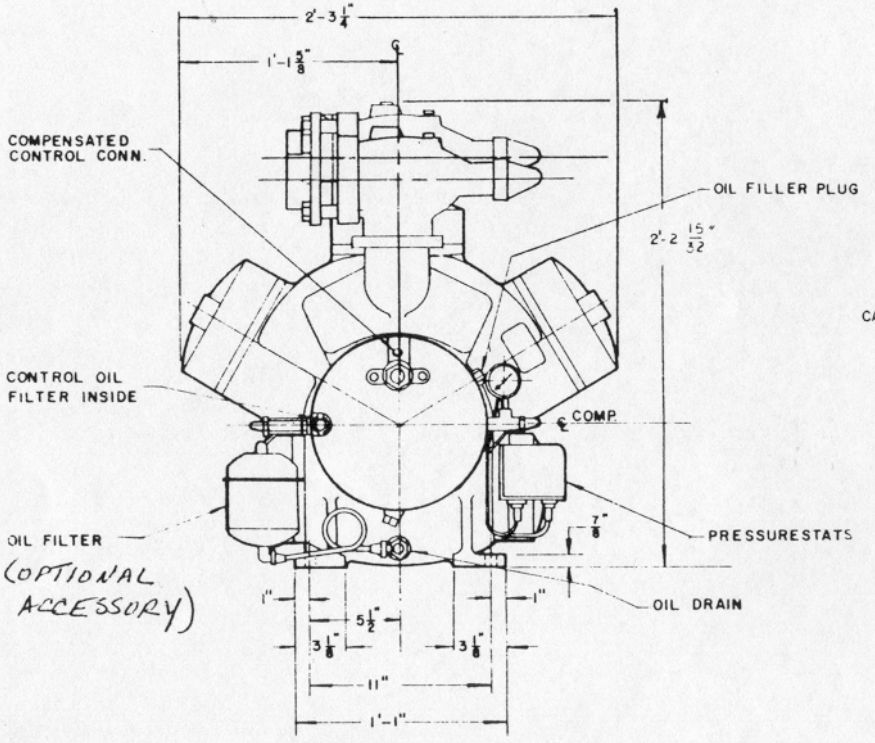

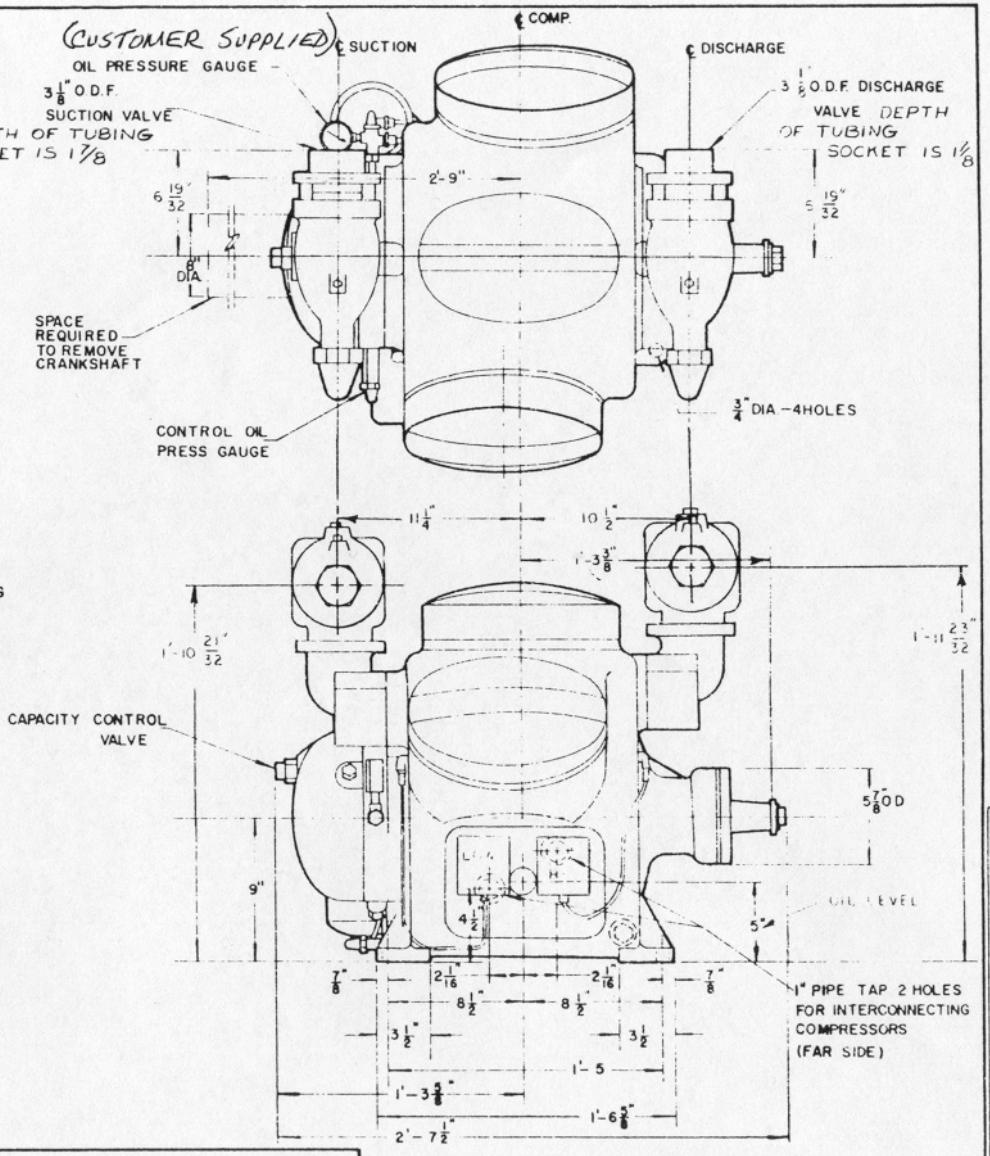

COMPRESSOR

MARK FOR _____

PART NO. _____ TYPE DRIVE: ☐ DIRECT ☐ BELT

RPM _____ DESIGN BHP INPUT _____ MOTOR HP _____

SAT SUCTION TEMP _____ F. SAT DISCHARGE TEMP _____ F

REFRIGERATION EFFECT _____ TONS. REFRIGERANT NO. _____

JOB NAME _____

JOB LOCATION _____

BUYER _____

BUYER NO. _____ CARRIER NO. _____

DIMENSIONS CERTIFIED BY _____ DATE _____

DATE	SUPERSEDES		REV.
3-20-73 PML	5H-060, DATED 12-1-67	COMPRESSOR ASSEMBLY 5H60 & 5H66	5H60-A201	

Carrier

THIS DRAWING IS THE PERSONAL PROPERTY OF CARRIER AIR CONDITIONING COMPANY DIVISION OF CARRIER CORPORATION, SYRACUSE, N.Y. ALL USE IS FORBIDDEN EXCEPT ON ITS WRITTEN CONSENT.

5H