CODES: MO & OC

JOB NAME _____

JOB LOCATION _____

BUYER _____

BUYER NO. _____ CARRIER NO. _____

DIMENSIONS CERTIFIED BY _____ DATE _____

COMPRESSOR

MARK FOR _____

PART NO. _____ TYPE DRIVE: ☐ DIRECT ☐ BELT

RPM _____ DESIGN BHP INPUT _____ MOTOR HP. _____

SAT SUCTION TEMP _____ F. SAT DISCHARGE TEMP _____ F

REFRIGERATION EFFECT _____ TONS. REFRIGERANT NO. _____

NOTES:

1. SHAFT DETAIL DRAWING 5F-531
2. COMPRESSOR MAY BE OPERATED IN EITHER DIRECTION OF ROTATION. STANDARD ROTATION IS COUNTER CLOCKWISE LOOKING FROM THE PUMP END; FOR REVERSE ROTATION ROTATE OIL PUMP 180°.
3. NET WEIGHT 610 LBS. INCLUDES OIL BUT NOT REFRIGERANT CHARGE.

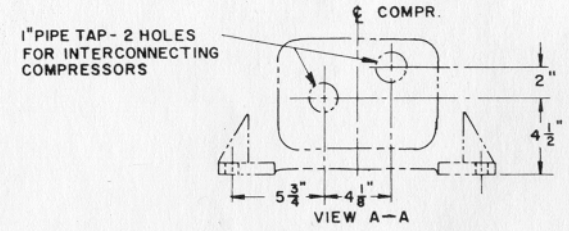

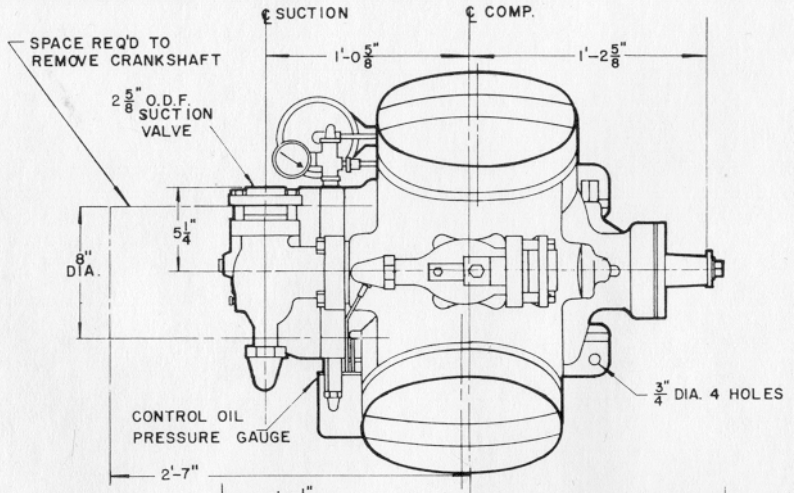

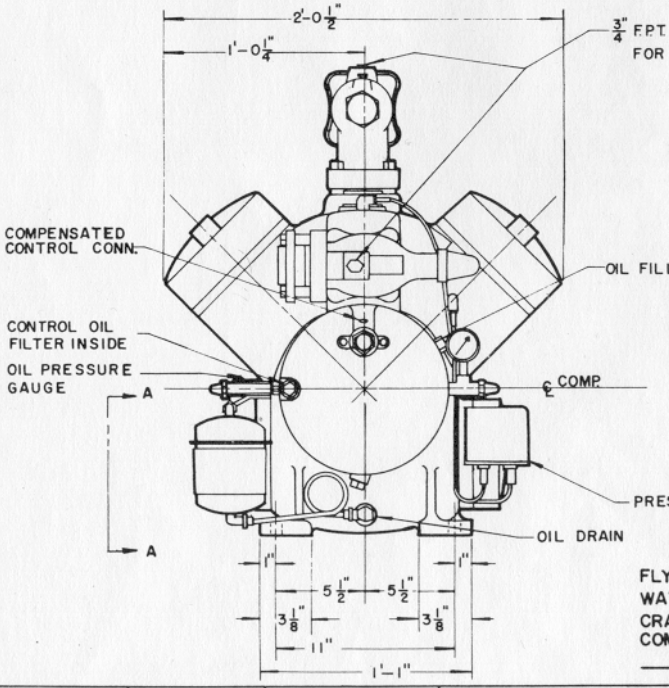

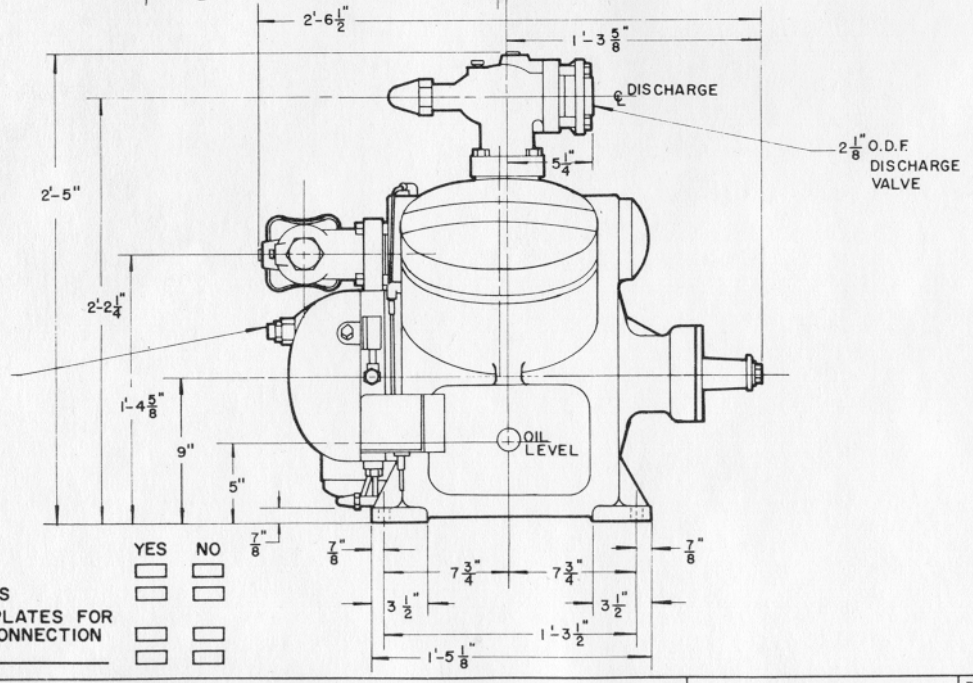

	YES	NO
FLYWHEEL	☐	☐
WATER COOLED HEADS	☐	☐
CRANKCASE COVER PLATES FOR COMPRESSOR INTERCONNECTION	☐	☐

DR. G.R.C.	TR JRS	DATE 12-23-64	5H40 & 46 COMPRESSOR ASSEMBLY	5H-040	REV. A
CHK. C.E.D.	APPD C.E.D.	SUPERSEDES ISSUE OF 5-10-61			

Carrier

THIS DRAWING IS THE PERSONAL PROPERTY OF CARRIER AIR CONDITIONING COMPANY DIVISION OF CARRIER CORPORATION - SYRACUSE, N.Y. ALL USE IS FORBIDDEN EXCEPT ON ITS WRITTEN CONSENT

5H