Application Data

CONTENTS

Page

OPEN-DRIVE COMPRESSORS 1
COMPRESSOR PHYSICAL DATA 1
Operating Requirements 2
Discharge Temperature 2
High Compression Ratio 2
Suction Gas Superheat 2
Keeping Liquid Refrigerant Out of Compressor 2
CARWIN™ Compressor Selection Software 3
Compressor Features and Accessories 3
Capacity Control 5
Motor Selection Data 9
Drive Packages 9
Approved Oils 9
BOOSTER COMPRESSORS FOR REFRIGERANT 22 AND 507/404A 12
Booster Application Data 12
Rating Basis 12
R Factors 12
Multistage System Pointers 12
Safety Factors 12
Determining Intermediate Pressure 13
Gas De-superheating 13
Liquid Cooling 13
Oil Separators and Lubrication 13
Control Pressurestat for Booster Application 14
Discharge Valve Springs 14
Water-Cooled Heads 14
Motor Selection Data 14
Compressor Starting Torque 14
AMMONIA COMPRESSORS 26
Ammonia Compressor Models 26
Brake Horsepower 26
Liquid Subcooling 26
Compressor Operating Limits 26
Discharge Temperature 26
Compression Ratio 26
Suction Gas Superheat 26
Head Pressure 27
Discharge Pressure 27
Compressor Design Characteristics and Accessories 27
R Factor 27
Compressor Operating Limits 27
AMMONIA BOOSTER LOW STAGE COMPRESSORS 35
R Factor 35
Compressor Operating Limits 35
Discharge Pressure Switch 35
Notes for Ammonia Ratings 35
Accessories 40
Precautionary Notes 41
5H41, 5H61, and 5H81 Ammonia Compressor Drawings 41

OPEN-DRIVE COMPRESSORS

These compressors are designed to operate with Refrigerants R-407C, R-448A, R-449A, R-22, R-134a, or R-507/R-404A. See Table 1.

COMPRESSOR PHYSICAL DATA

Table 1 — Open-Drive Compressors

COMPRESSOR MODEL		5F20	5F30	5F40	5F60	5H40	5H46	5H60	5H66	5H80	5H86	5H120	5H126
Nominal Horsepower	R-134a/R-407C	5	7 1/2	10	15	25	40	40	50	50	75	75	100
	R-22	10	15	20	25	40	60	60	75	75	100	125	150
	R-507/404A/448A/449A	10	15	20	25	40	60	60	75	75	100	125	150
Number of Cylinders		2	3	4	6	4	4	6	6	8	8	12	12
Bore (in.)		2 1/2	2 1/2	2 1/2	2 1/2	3 1/4	3 1/4	3 1/4	3 1/4	3 1/4	3 1/4	3 1/4	3 1/4
Stroke (in.)		2	2	2	2	2 3/4	3 7/16	2 3/4	3 7/16	2 3/4	3 7/16	2 3/4	3 7/16
Displacement Cfm at 1750 Rpm		19.8	29.8	39.8	59.6	92.4	115.5	138.4	173.0	184.7	231.0	276.8	346.0
Ratings in Tons*	R-134a/R-407C	5.2	7.8	10.5	15.7	24.7	30.6	37.0	45.9	49.5	61.1	74.0	91.8
	R-22	8.5	12.7	16.8	25.3	39.6	49.1	59.4	73.8	79.2	98.2	119.0	145.0
	R-507/404A, R-448A/R-449A	8.4	12.6	16.8	25.2	38.5	47.7	57.7	71.6	77.0	95.5	115.5	143.2
Max Speed (rpm)		1750	1750	1750	1750	1750	1750	1750	1750	1750	1750	1750	1750
Min Speed (rpm)	For Lubrication	400	400	400	400	400	400	400	400	400	400	400	400
	For Unloader Action	600	700	800	900	800	800	900	900	1100	1100	900	900
Net Oil Pressure (psig)†		45	45	45	45	45	45	45	45	45	45	45	45
Oil Charge (pt)		5	5 1/2	12	13	18	18	21	21	41	41	61	61
Normal Oil Level in Sight Glass		C.L.	C.L.	3/8"Above C.L.	3/8"Above C.L.	C.L.	C.L.	C.L.	C.L.	C.L.	C.L.	C.L.	C.L.
Min Oil Pressure for Unloader Action (psig)		22	28	35	35	35	35	35	35	35	35	35	35
Suction Line ODF (in.)		1 1/8	1 5/8	1 5/8	2 1/8	2 5/8	2 5/8	3 1/8	3 1/8	3 1/8	3 1/8	4 1/8	4 1/8
Discharge Line ODF (in.)		7/8	1 3/8	1 3/8	1 5/8	2 1/8	2 1/8	3 1/8	3 1/8	3 1/8	3 1/8	4 1/8	4 1/8
Bare Compressor Weight (lb)		175	215	355	400	610	610	795	795	1115	1115	1580	1580

LEGEND

C.L. — Center Line
ODF — Outside Diameter Female (in.)

* 40°F saturated suction, 105°F saturated discharge, 15°F superheat, 0°F subcooling.

† Net oil pressure = oil pressure gage reading – suction pressure. The above oil pressure is typical with mineral or alkylbenzene oils. A slight increase in oil pressure may result with the use of Polyolester (POE) oil.

Manufacturer reserves the right to discontinue, or change at any time, specifications or designs without notice and without incurring obligations.

Operating Requirements — Satisfactory operation of a reciprocating compressor depends on 3 fundamental requirements:

1. Prevention of excess discharge temperature.
2. Adequate compressor lubrication.
3. A clean and dry system.

Discharge Temperature — The temperature at the discharge valves within the cylinders is a controlling factor. Some cooling of the discharge gas occurs before reaching the discharge stop valve; thus, when water-cooled heads are used, this cooling is greater than it is without water cooling. To prevent excessive temperature at the compressor discharge valves, the following temperatures, when measured immediately following the discharge stop valve, must never be exceeded:

For nonwater-cooled heads	275°F max
For water-cooled heads	250°F max

Refer to the Carlyle Compressor Selection program (http://www.carlylecompressor.com) to determine discharge temperature.

High Compression Ratio — Avoid compressor operation at compressor ratios exceeding those covered in the rating tables. For operating conditions outside the limits shown in these tables, use 2-stage compression. Care must be taken to prevent the compressor from pulling down to levels outside the rating tables.

Suction Gas Superheat — Excessive suction gas superheat will result in abnormally high discharge temperatures, which must be avoided. When using Refrigerants R-134a and R-507/404A it is recommended that the actual suction gas temperature not exceed the values in Table 2. With ammonia, the suction gas superheat must be kept to a minimum to prevent excessive discharge temperatures.

Table 2 — Actual Suction Gas Temperature Limits (F) Refrigerants R-134a and R-507/404A

SATURATED SUCTION GAS TEMP (F)		–60	–50	–40	–30	–20	–10	0 AND ABOVE
Actual Suction Gas Temp	R-134a/R-407C	—	—	—	—	—	—	65
	R-507/404A R-448A/R-449A	25	35	45	55	65	65	65

Keeping Liquid Refrigerant Out of Compressor — Liquid refrigerant or excessive amounts of entrained liquid particles in suction gas must be kept out of the compressor by proper system design and compressor control. Under operating conditions, presence of unevaporated liquid refrigerant in the compressor tends to break down oil film on cylinder walls, resulting in increased wear and loss of machine capacity.

During compressor operation, proper adjustment of the expansion valve will prevent excessive amounts of liquid from entering the compressor.

During compressor shutdown, gravity, thermal action and refrigerant absorption can result in a refrigerant and oil mixture in compressor crankcase. Gravity flow can be prevented by the use of recommended loops, but thermal action and the absorption of refrigerant by lubricating oil cannot be prevented by piping design.

For the above reasons, the compressor must be controlled during idle times by one of the following methods.

MINIMUM PROTECTION — The minimum protection required is shown in Fig. 1. Actuated control thermostat energizes crankcase heater and closes the liquid line solenoid valve simultaneously. With crankcase heaters energized, the crankcase temperature is always held above shutdown temperature in the evaporator coil and there will be no refrigerant migration to the crankcase.

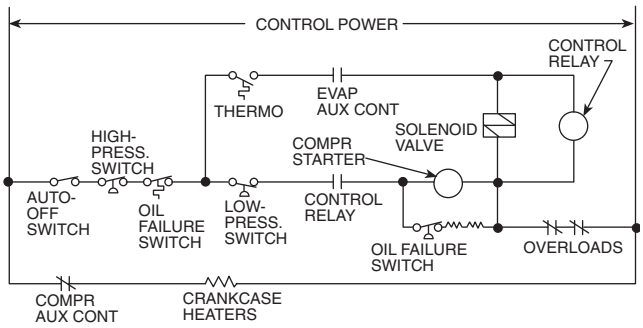

Fig. 1 — Minimum Protection

With this type of control, a control relay is required and crankcase heaters have to be energized when the compressor is not operating.

The control relay coil is located in parallel with the liquid line solenoid, and a normally open control relay contact is added in series with the compressor starter and other auxiliary safety devices.

When the thermostat calls for cooling, the solenoid valve opens and control relay is energized. This closes the relay contact and, if other safety devices are in their normal position, compressor will start. Simultaneously, the normally closed compressor auxiliary contact will open, removing crankcase heaters from the circuit.

When the thermostat is satisfied, the solenoid will close and control relay is deenergized. This opens relay contacts and compressor stops. This causes compressor auxiliary contacts to close, energizing crankcase heaters.

Specifications are sometimes written to call for a degree of protection greater than that afforded by the standard method. If this is the case, either single pumpout or automatic pumpdown control may be required.

AUTOMATIC PUMPDOWN CONTROL (FIG. 2) — Pumpdown control is the most effective means of compressor control in keeping liquid refrigerant out of the crankcase on system shutdown.

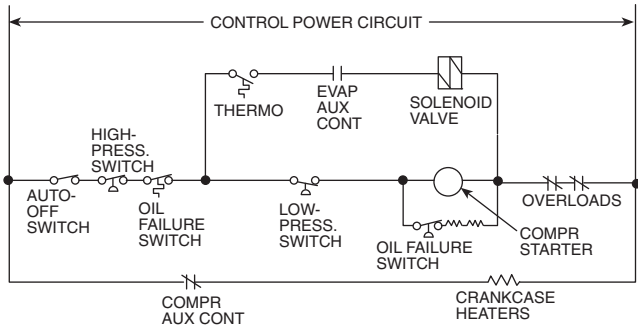

Fig. 2 — Automatic Pumpdown Control

In the basic pumpdown control sequence, the thermostat controls the liquid line solenoid valve to stop or start the flow of refrigerant to the evaporator as required.

The pumpdown control system permits compressor cycling if a system malfunction allows low side pressure to rise. Although this cycling is sometimes considered objectionable, it illustrates need for maintenance attention and provides positive protection against liquid refrigerant accumulating in the compressor crankcase.

Do not use pumpdown control with dry expansion coolers as it may cause frost pinching or freeze-up. Do not use pumpdown control with dry expansion coolers if it is anticipated that

there will be short bursts of system operation, as this will result in a gradual loss of oil.

SINGLE PUMPOUT CONTROL (FIG. 3) — Pumpout control is not as effective as pumpdown control in keeping liquid refrigerant out of the crankcase. However, it is usually satisfactory when used with crankcase heaters if pumpdown is not acceptable.

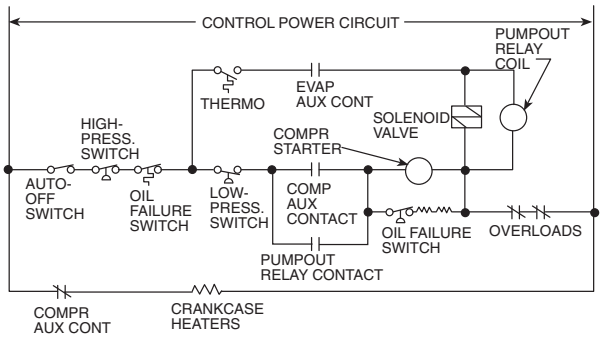

Fig. 3 — Single Pumpout Control

Single pumpout control is similar to pumpdown control, except that a pumpout relay is added, a normally open compressor auxiliary contact is necessary, and energizing of crankcase heaters is required at end of each operating cycle.

With single pumpout control, when the thermostat is satisfied, the compressor pumps down once and stops. It starts again only when the thermostat calls for cooling. In pumpdown control, the compressor cycles only on the low-pressure switch, regardless of thermostat demands.

Do not use pumpout control with dry expansion coolers as it may cause frost pinching or freeze-up.

MANUAL PUMPDOWN — The compressor may be controlled manually without the use of pumpdown, or single pumpout control, and without crankcase heaters, provided the system is at all times under control of a qualified operator. The operator will pump down the system by use of manual valves and will keep liquid, suction and discharge valves closed when the machine is not operating.

CARWIN™ Compressor Selection Software —

The Compressor Selection Software (CARWIN™) provides performance data on Carlyle compressors with commonly used refrigerants at air conditioning and refrigeration operating conditions. CARWIN™ calculates performance estimates in a user friendly graphic interface for single-compressor systems.

The Load Match feature in CARWIN™ has the ability to select the compressor(s) per your unique system requirements. Compressor performance estimates generated by the selection software can be output to a PDF or Excel file format.

This software will provide ease of compressor selection and access to performance data information. Use the Carlyle software program "CARWIN™" at www.carlylecompressor.com.

Compressor Features and Accessories

WATER-COOLED HEADS AND OIL COOLERS — Water-cooled heads are typically not necessary for R-134a applications within the range of compressor ratings shown in this publication. For R-507/404A at the shaded conditions shown in the compressor ratings tables, water-cooled heads may be necessary if the discharge temperature is greater than 275°F. The discharge temperature will increase with return gas temperature.

When operating conditions are such that suction gas becomes highly superheated and/or the compression ratio is high, it is recommended that an oil cooler be used on the compressor. An oil cooler is required on increased displacement compressors (5H46, 66, 86, and 126) on installations where compressor(s) can be subjected to extended periods of continuous, fully unloaded operation. These periods do not afford sufficient removal of compression and friction heat, and could result in overheating of the running gear, shaft seal and crankcase oil. The addition of an oil cooler removes excessive heat, ensuring increased life expectancy of compressor and components.

Extended periods of continuous, fully unloaded operation will occur usually on variable-volume installations that use hot gas bypass to maintain conditions under all load situations. Without hot gas bypass, the compressor will usually cycle on the low-pressure switch (or temperature controlling device) giving time for seal, oil and crankcase to cool.

On multiple-compressor installations where all units are manifolded into one refrigerant circuit, the controls should be designed to cycle off compressors at light loads to put maximum output on the still operative compressor. It is always desirable for the compressor to operate with as many cylinders as possible in loaded condition.

Water-cooled oil cooler package is available from the factory and is easily field installed on all 5 Series compressors. Refer to 5F,H Compressor Ratings to determine when oil coolers are required. These ratings, however, do not indicate oil cooler requirements during periods of extended continuous operation under fully unloaded operation. This should be determined on individual job basis.

Water flow through compressor heads (and water-cooled oil coolers, if used) must be shut off when the compressor is not running to prevent refrigerant vapors from condensing at the compressor during OFF cycles. For this purpose a solenoid valve is recommended in the water supply line to compressor heads.

Values listed in Table 3 assume a water temperature rise of 30 degrees. Oil cooler and water-cooled heads must be piped in series, with the oil cooler first. Leaving water temperature should be between 100°F and 120°F, with 120°F being maximum allowable temperature. Maximum working pressure for water-cooled heads is 125 psi.

Table 3 — Minimum GPM Required for Water-Cooled Heads and/or Oil Cooler (Based on 30°F Rise)

COMPRESSOR	GPM
5F	2-3
5H (4, 6 AND 8 CYLINDERS)	6
5H (12 CYLINDERS)	8

SAFETY RELIEF VALVES — All 5H compressors are equipped with built-in safety relief valves that are factory set to relieve from discharge to suction side of the compressor at a pressure differential of 350 psi.

Safety relief valves that relieve at a 400 psi pressure differential are factory installed on the 5F60 compressor but are not available with smaller 5F compressors.

SUCTION STRAINERS — Each 5F,H compressor is equipped with one or 2 suction strainers located in the suction manifold. On new installations, felt filters should be used in suction strainers to trap foreign material left after installation. After 50 hours of use, these felt filters must be removed. See 5F,H Installation Instructions for further details.

OIL SAFETY SWITCH — An oil safety switch is provided as standard with all compressors except 5F20 and 5F30. This switch is optional equipment on 5F20 and 5F30 compressors. This switch will shut off the compressor before high oil temperatures or lack of oil causes loss of oil pressure which can result in compressor failure. As a safety feature, this switch must be reset manually after cutout.

OIL SEPARATORS — Oil separators in the hot gas discharge line are not recommended for general use. However, there are systems where protection afforded by a separator is desirable, notably systems employing flooded evaporators or refrigeration systems with long system piping. For a more complete discussion see Carrier's System Design Manual.

CRANKCASE OIL HEATERS — Crankcase oil heaters are available for all 5F,H compressors. Heaters keep the crankcase warm during off cycles and thus minimize refrigerant absorption in the oil. Refer to the 5F,H Installation Instructions for installation and wiring.

INTERCONNECTION OF COMPRESSORS — All 5F,H compressors are furnished with removable handhole cover plates on each crankcase. When field interconnection is desired on 5F40 through 5H86 compressors, cover plates can be removed and replaced by special cover plates with tapped openings. These tapped cover plates have connections for both oil and gas equalizing lines. For interconnection of 5F20 and 5F30 compressors, use the opening for the oil sight glass (see 5F,H Installation Instructions). Cover plates for interconnection are standard equipment on 5F120 and 126 compressors.

Many refrigeration systems utilize oil management components such as an oil separator, oil reservoir and floats. The oil level control float can be installed in the sight glass connection in the 5F,H handhole cover plate.

VIBRATION ISOLATORS — A standard vibration isolation package is available for each 5F,H compressor. This consists of a standard rubber-in-shear and compression type mounting that gives an average static deflection of approximately $^1/_8$ in. and provides reasonably good vibration isolation at 1750 rpm.

The use of vibration isolators is recommended for all compressor and condensing units because:

1. Transfer of vibration to structure is reduced when the units are installed on upper floors.
2. They limit drive shaft misalignment on installations where units are bolted to an uneven concrete floor.

Vibration isolators giving approximately $^3/_8$-in. deflection are available for superior isolation or if the compressor is run at slower speeds. Tables 4 and 5 provide an estimated weight distribution on legs of a compressor or condensing unit when used with a normal horsepower motor.

MUFFLERS — Four standard mufflers cover the entire model range of 5F,H compressors. It is recommended that these mufflers be installed when compressors are used with remotely located water-cooled or evaporative condensers.

Mufflers are not usually necessary with smaller 5F compressors and their use is recommended only when quiet operation is required.

Each piping package to convert 5H compressor units to condensing units includes a standard muffler of appropriate size.

Pressure drop through mufflers is about $^1/_2$ psi at 40°F suction and 105°F discharge with following loadings: 5 tons with 5F20 muffler, 15 tons with 5F40 muffler, 35 tons with 5H40 muffler and 100 tons with 5H120 muffler.

Table 4 — Weight Distribution, Condensing Units

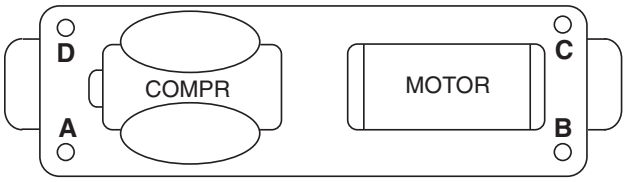

COMPR	COND SIZE	WEIGHT DISTRIBUTION (LB)			
		BELT DRIVE		DIRECT DRIVE	
		A OR D	B OR C	A OR D	B OR C
5F20	20	138	115	—	—
	30	148	125	—	—
5F30	20	163	135	—	—
	30	170	148	—	—
5F40	30	280	220	—	—
	40	325	263	305	240
	60	345	285	325	265
5F60	40	365	305	—	—
	60	406	345	360	305
	027	—	—	470	430
5H40	60	525	423	—	—
	027	585	478	555	450
	043	665	603	580	505
5H46	043	—	—	580	505
	054	—	—	610	535
	070	—	—	625	550
5H60	027	693	570	—	—
	043	745	625	710	590
	054	825	818	755	635
	054*	915	823	—	—
	070	930	833	765	645
	084	—	—	960	865
5H66	054	—	—	755	635
	070	—	—	765	645
	084	—	—	690	865
	097	—	—	1030	935
5H80	043	1023	803	—	—
	054	1065	848	985	900
	070	1075	858	995	910
	084	1163	943	1080	995
	097	1185	1018	1150	1065
5H86	070	—	—	995	910
	084	—	—	1030	995
	097	—	—	1150	1065
	127	—	—	1300	1215
5H120	054	1335	1008	—	—
	070	1350	1023	1280	1080
	084	1425	1098	1340	1140
	097	1493	1163	1385	1185
	127	—	—	1535	1335
5H126	097	—	—	1325	1185
	127	—	—	1535	1335

*Oversize frame.

Table 5 — Weight Distribution, Compressor Units (See drawing, Table 4)

COMPR	WT DISTR (LB)		NEMA FRAME SIZE
	A or D	B or C	
BELT DRIVE			
5F20	115	100	182T, 184T, 213T, 215T
5F30	140	118	184T, 213T, 215T, 254T
5F30*	168	145	184T, 213T, 215T, 254T
5F40	228	165	213T, 215T, 254T, 256T
5F60	280	210	215T, 254T, 256T, 284T
5H40	410	305	256T, 284T, 286T, 324T, 326T
5H60	515	395	286T, 324T, 326T
5H60*	630	533	324T, 326T, 364T, 365T
5H80	685	558	324T, 326T, 364T, 365T, 404T
5H120	1050	728	364T, 365T, 404T
DIRECT DRIVE			
5F40	210	145	213T, 215T, 254T, 256T
5F60	245	185	215T, 254T, 256T, 284T, 286T
5F60*	290	255	256T, 284T, 286T
5H40	380	275	256T, 284T, 286T, 324TS, 326TS
5H46	380	275	324TS, 326TS, 364TS, 365TS
5H80	480	360	286T, 324TS, 326TS, 364TS
5H60	480	360	365TS, 404TS
5H66	480	360	286T, 324TS, 326TS, 364TS, 365TS, 404TS
5H80	690	605	324TS, 326TS, 364TS, 365TS, 404TS
5H86	690	605	365TS, 404TS, 405TS
5H120	890	690	364TS, 365TS, 404TS, 405TS, 444TS
5H126	890	690	405TS, 444TS, 445TS

LEGEND

NEMA — National Electrical Manufacturers Association

*Oversize frame.

Capacity Control — The 5F and 5H compressor line has multiple configurations for cylinder unloading which are dependent on the compressor model type. For example the 5F20 and 5F30 models require an external pressure control valve kit to unload the compressor. For compressor models 5F40 through 5H126, the pressure control valve is internally installed.

Additionally there are external electric unloading conversion kits available for all 5FH compressor models, if pressure unloading is not preferred. These kits consist of 3-way valves, solenoid coils, and oil line sets that must be installed by the end user (reference instructions that come with these external unloading kits).

Factory-installed electrical unloading for the 5H40 – 5H126 compressor models are available. A redesign of the oil pump bearing end-bell incorporates electric unloading solenoid valves and oil pressure safety control factory installed. An external unloading kit is no longer required. The 5H41 – 5H81 ammonia compressors will be the first production models to utilize installed electrical unloading technology (see ammonia section). All 5H field compressors, that currently use pressure or external electric unloading, can be retrofitted with the redesigned electric unloading bearing head.

If cylinder head unloading is not preferred, all 5FH compressor models can be applied with a VFD for capacity control. The allowable speed range is 400 to 1750 rpm for non-ammonia models. These compressor models will not have cylinder unloading capability.

The cylinder unloading mechanism is powered by a compressor force-feed lubricating system. This feature assures unloading of all controlled cylinders at starting regardless of the position of the capacity control valve, since suction valves will be held in open position until the lubricating oil pressure reaches its normal operating level. Refer to Fig. 4 for cylinder unloading sequence.

An external adjusting stem is provided to set control point and maintain desired suction pressure. The control point is adjustable from 0 to 85 psig suction pressure. Differential over the complete range at any temperature level is 10.7 psig with Refrigerant 22. A 7-lb spring (for use on 5F40 and larger units) is furnished with the compressor which, when used, results in an adjustable control point from 0 to 50 psig with a 6.8 psig range (see Fig. 5).

With this arrangement, suction pressure will not drop below the control set point minus the differential within range of capacity steps since the compressor will unload to balance its capacity with evaporator load.

Power elements and valve lifting mechanisms are identical on all 5F,H compressors. However, when using capacity control, various methods are used to activate the power elements.

See Table 6 for unloading steps and power requirements at each step.

CAPACITY CONTROL FOR 5F20 AND 5F30 (Fig. 6)

Major Elements of Control Systems:

1. *Capacity Control Valve:* Function is to raise or lower oil pressure from oil pump in response to refrigerant suction pressure.
2. *Power Elements:* Function is to supply power necessary to operate valve lifting mechanism. It is modulated by the capacity control valve.
3. *Valve Lifting Mechanism:* Consists of a sleeve and push pin assembly around each controlled cylinder, designed to hold the suction valve open, or to permit the valve to remain in a normal operating position depending on its actuation by the power element.

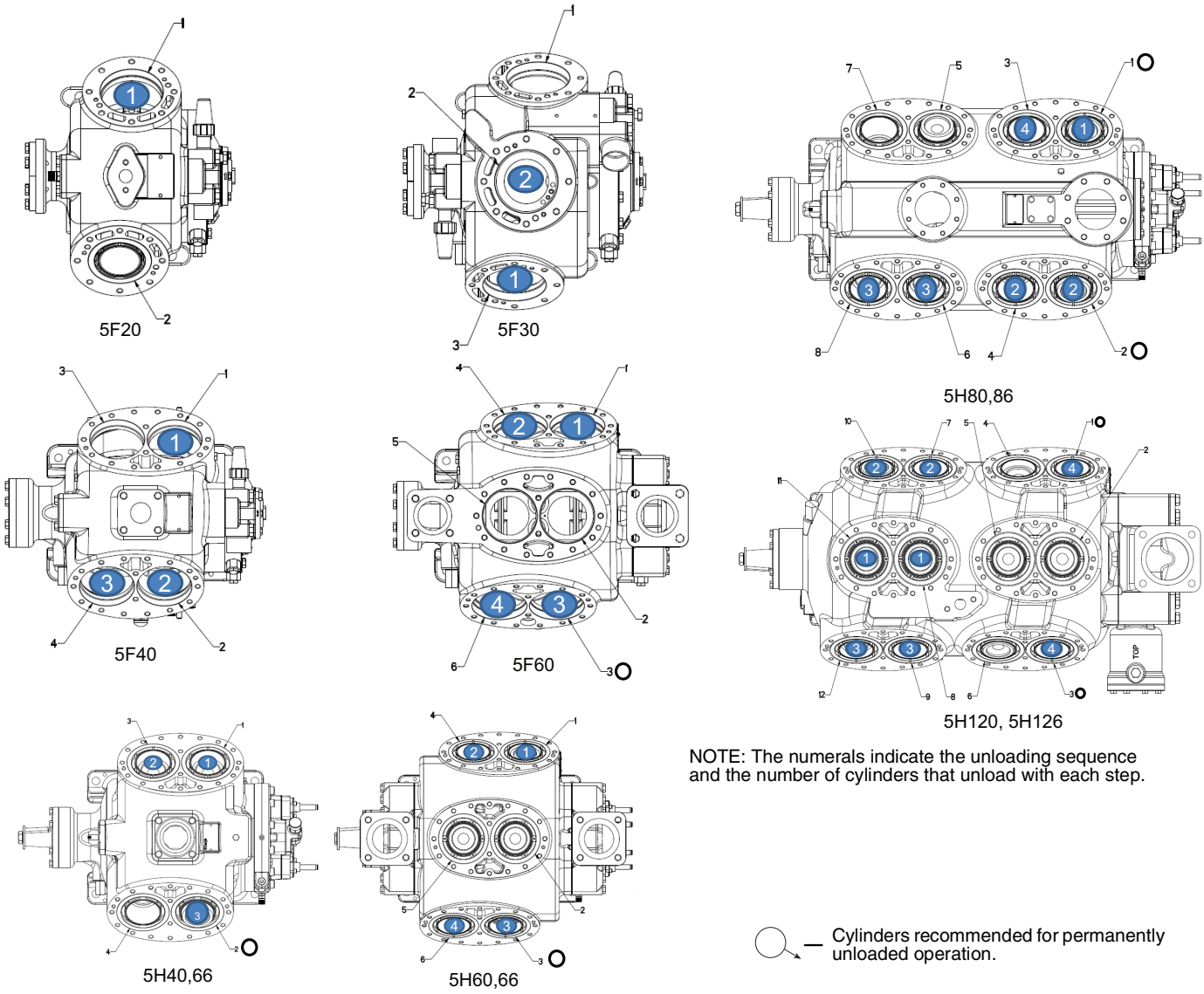

Fig. 4 — Cylinder Unloading Sequence

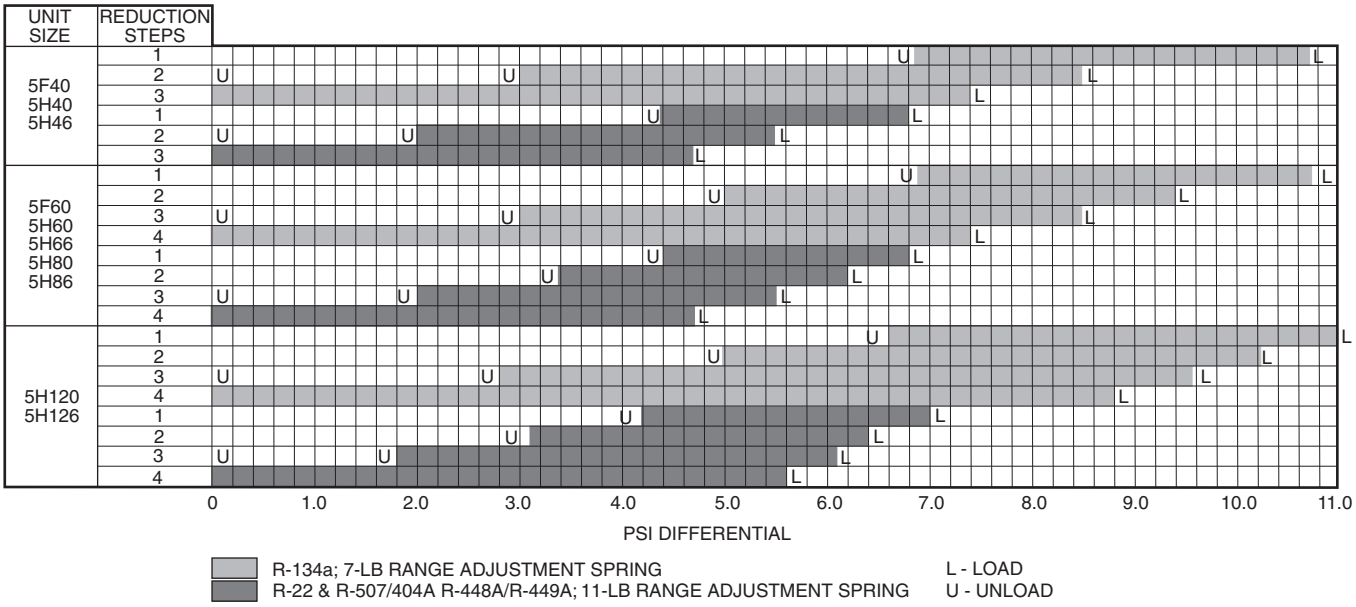

Fig. 5 — Operating Sequence of Capacity Reduction Steps

Table 6 — Capacity Control Reduction Steps

COMPR MODEL	CONTR CYL	CAP. STEPS (% FULL LOAD CAP.)									
		100	87 1/2	83 1/3	75	66 2/3	62 1/2	50	37 1/2	33 1/3	25
		% FULL LOAD BHP									
		100	90	86	80	74	71	60	50	45	38
		Number Of Active Cylinders									
5F20	1	2	—	—	—	—	—	1	—	—	—
5F30*	1	3	—	—	—	2	—	—	—	—	—
5F40	3	4	—	—	3	—	—	2	—	—	1
5F60	4	6	—	5	—	4	—	3	—	2	—
5H40	3	4	—	—	3	—	—	2	—	—	1
5H46	3	4	—	—	3	—	—	2	—	—	1
5H60	4	6	—	5	—	4	—	3	—	2	—
5H66	4	6	—	5	—	4	—	3	—	2	—
5H80	6	8	7	—	—	—	5	—	3	—	2
5H86	6	8	7	—	—	—	5	—	3	—	2
5H120	8	12	—	10	—	8	—	6	—	4	—
5H126	8	12	—	10	—	8	—	6	—	4	—

*Two controlled cylinders (to 33 1/3%) available on request for 5F30.

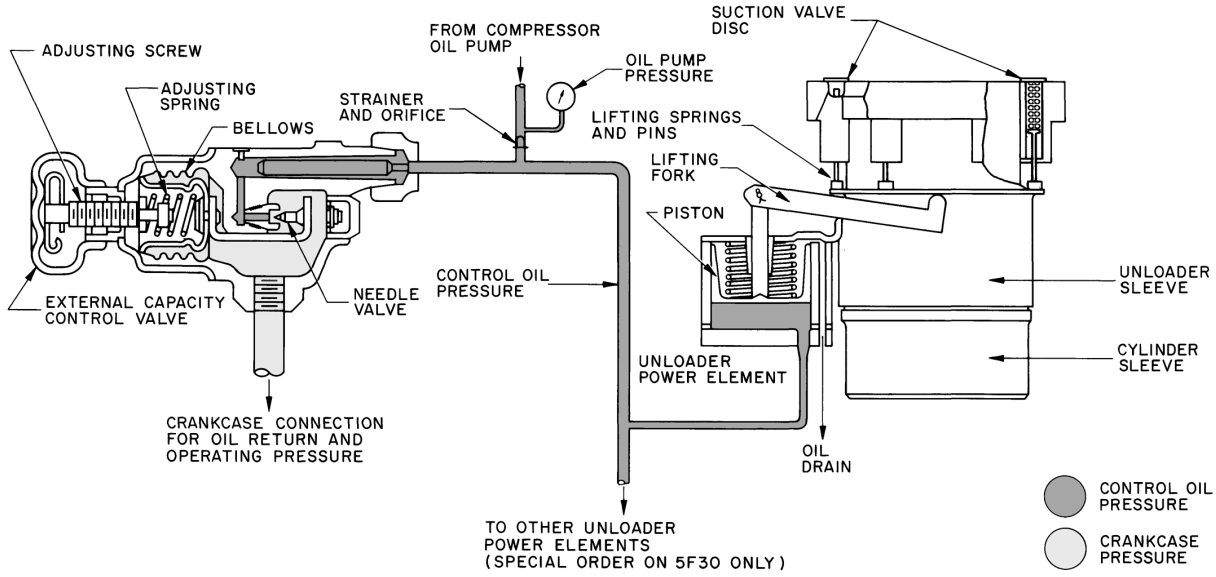

Fig. 6 — Capacity Control — 5F20, 5F30

Principle of Operation of the System — An increase in suction gas pressure, which requires increased compressor capacity, causes the needle valve to close. Therefore, lubrication oil pressure in power element increases. Increased oil pressure in power element moves the power piston upward and the suction valve discs are allowed to seat.

Table 7 indicates control oil pressure at which controlled cylinders start to unload and are completely unloaded.

Different points of control pressure on 5F30 are obtained by using springs with different loading rates in the power element.

CAPACITY CONTROL FOR 5F40 THROUGH 5H86 (Fig. 7)

Major Elements of Capacity Control Systems:

1. *Capacity Control Valve:* Function is to raise or lower the control oil pressure to the hydraulic relay piston in response to refrigerant suction pressure. Increase in suction pressure increases control oil pressure in the hydraulic relay.
2. *Hydraulic Relay:* Function is to feed lubrication oil from the oil pump at full pressure in sequence to one or more power elements. Relay is activated by control oil pressure from the capacity control valve.
3. *Power Element:* Supplies power to operate the valve lifting mechanism.
4. *Valve Lifting Mechanism:* Consists of a sleeve and push pin assembly around each controlled cylinder, designed to hold the suction valve open or to permit the valve to remain in a normal operating position, depending on its actuation by the power element.

Principle of Operation of the System — A decrease in suction gas pressure, which necessitates a decrease in compressor capacity, causes the range spring to open the capacity control modulating valve. This allows control oil to relieve from the hydraulic relay and thus reduces control oil pressure in the relay. With reduced control oil pressure, the spring in the hydraulic relay moves a piston and thus lubrication oil from the oil pump is prevented from flowing to a particular deactivated power element. This relieves oil pressure from the power element, allowing the spring in the power element to move the lifting fork and unload the cylinder. An increase in suction pressure reverses action and loads cylinders.

Table 7 — Initial and Final Unloading Oil Pressures — 5F20, 5F30

COMPR	NO. OF CONTROLLED CYLINDERS	START TO UNLOAD OIL PRESS. (PSI)	COMPLETELY UNLOADED OIL PRESS. (PSI)
5F20	1	19.8	13.0
5F30	1	30.0	20.2
	2	19.8	13.0

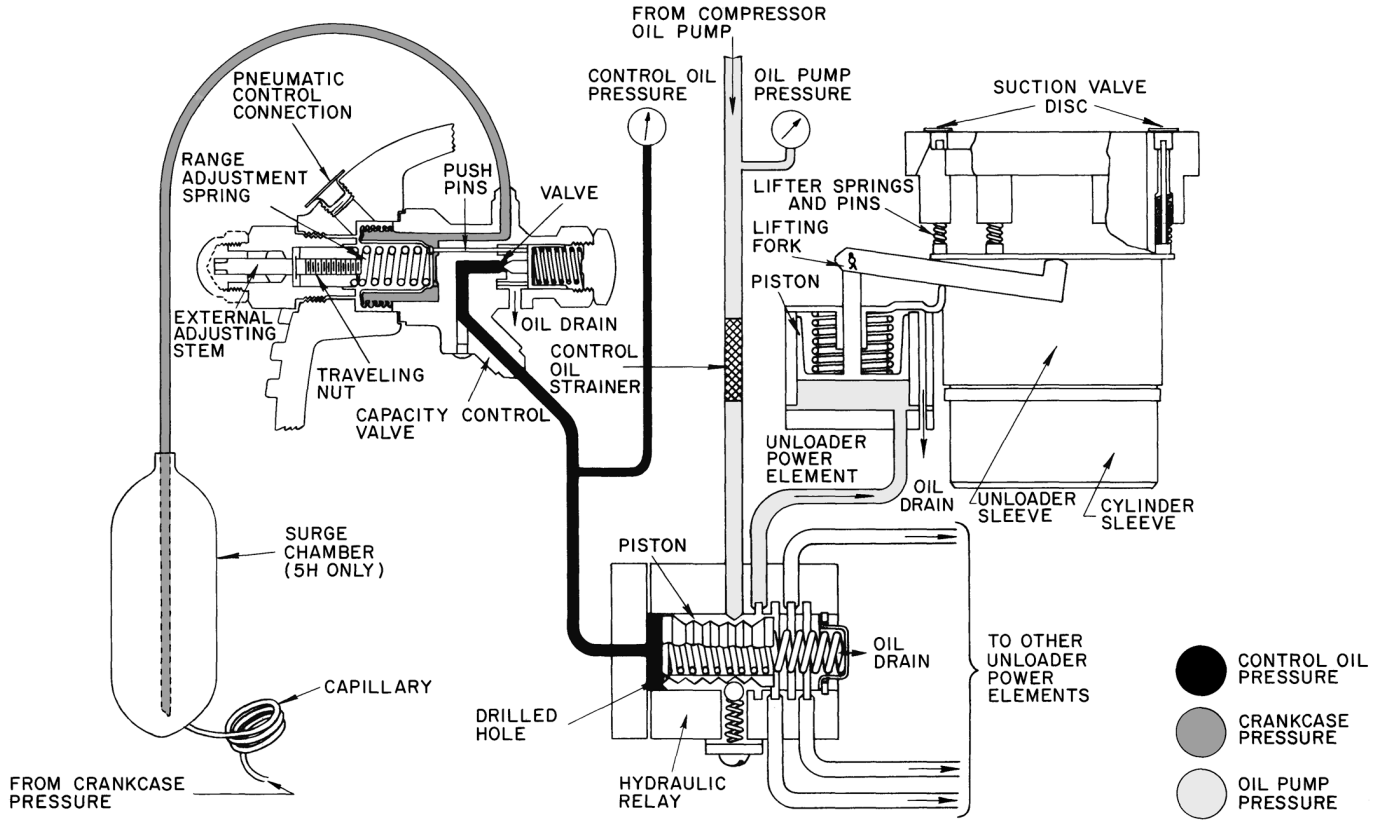

Fig. 7 — Capacity Control — 5F40, 60; 5H40, 46, 60, 66, 80 and 86

5H120, 5H126 CAPACITY CONTROL (FIG. 8) — This capacity control system is slightly different from the system on 5F40 through 5H86 compressors. Unloaded starting and capacity reduction is obtained by holding open the suction valves of a number of cylinders. For capacity control purposes, a suction-pressure-actuated capacity control valve pilots a hydraulic relay that loads or unloads cylinders in pairs.

Major Difference from the 5F40 through 5H86 Capacity Control:

1. The hydraulic relay design provides a wider pressure differential between cylinder cut-in and cutout points. The relay is a small, easily removed cartridge rather than an integral part of pump end cover.

PNEUMATIC COMPENSATION OF COMPRESSOR CAPACITY CONTROL — Adding a control air line to the external pneumatic control connection permits pneumatic resetting of the control point in accordance with changes in operating conditions. Each pound of change in air pressure resets the control one pound in the same direction. Thus, a one-pound rise in air pressure will cause unloading to begin at a suction pressure one pound higher than the original control point, etc. Figure 7 shows a typical pneumatic control arrangement. All components and installation instructions are field supplied.

Control Pressurestats — Dual pressurestats come factory-installed with some 5F,H compressor models. They are often referred to as high and low-pressure cutouts. Their function is to cut the circuit to the holding coil of the compressor motor starter when pressure setting limits are exceeded.

The high pressurestat has an operating range from 50 to 450 psig with a differential range from 170 to 235 psig (adj). The low pressurestat has an operating range from 20 to 60 psig and a differential range from 60 to 90 psig (adj).

Pressurestat settings should be adjusted on the job to meet particular operating conditions for which the compressor(s) have been selected. Directions for setting these pressurestats are in the 5F,H Installation Instructions.

Permanently Unloaded Cylinders — Operation of an open-drive compressor with its cylinders permanently unloaded requires field modification. 5F60 through 5H66 compressors can operate with one cylinder unloaded; 5H80 through 5H126 compressors can operate with 2 cylinders unloaded. Compressors are modified by removing the suction valve and suction valve springs from the cylinder(s) shown in Fig. 4.

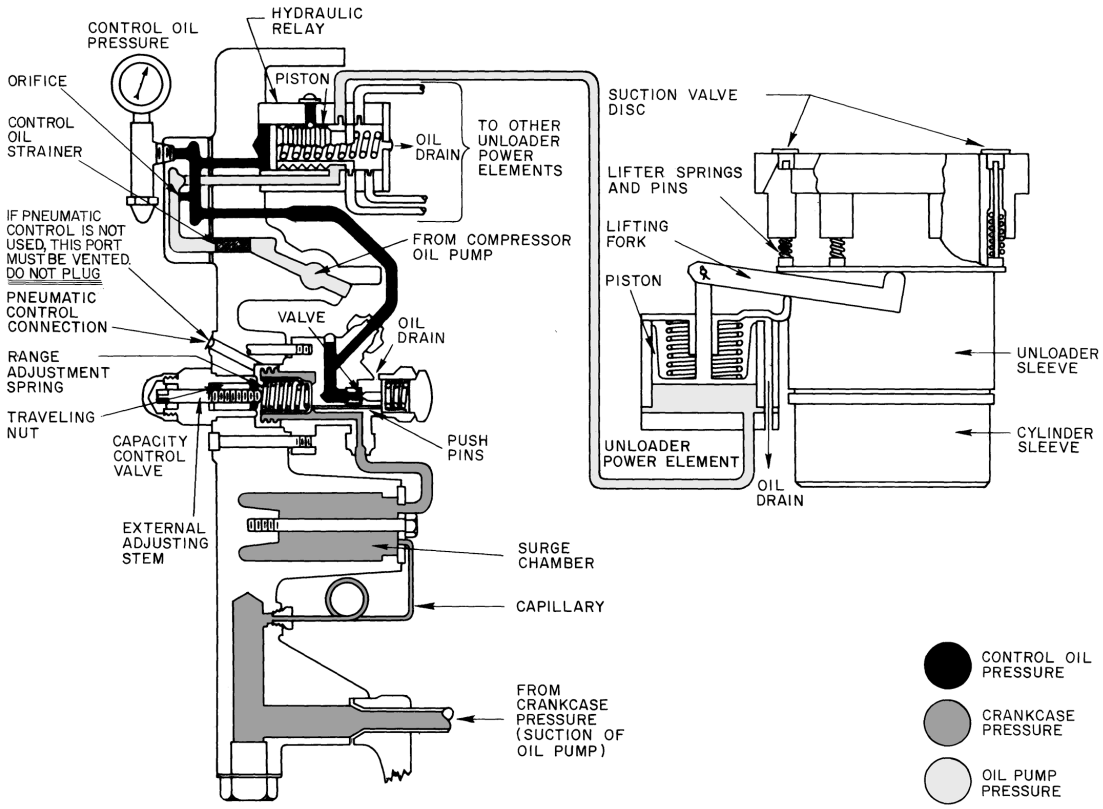

Fig. 8 — Capacity Control — 5H120, 5H126

Motor Selection Data — Motor selection data based on brake horsepower occurring at design operating condition is usually satisfactory for applications in air conditioning suction temperature range.

Required compressor starting torque is dependent on discharge pressure as well as pressure differential occurring during start-up and is the same for any compressor speed. Values shown in Table 8 indicate maximum starting torque for R-134a, R-22, and R-507/404A. In most cases, a standard torque motor can be selected because of the partially unloaded starting feature of the 5F and 5H compressors.

In selection of a motor, the required motor starting torque must exceed the compressor starting torque only when the compressor is operating at same speed as the motor. If compressor speed is less than motor speed, as on some belt drive units, the motor starting torque requirements are reduced in proportion to the speed ratio between the compressor and motor because of mechanical advantage available to the motor.

In special applications or systems where there is a large pull-down requirement, the bhp requirement during pull-down may significantly exceed bhp at design conditions. The motor must not be overloaded during pull-down operation. If the motor is sized for pull-down, it will be only partially loaded during design operation and will run inefficiently. Therefore, select a motor that will be optimized for system design requirements and not for pull-down requirements. Two ways for handling this are:

1. Install a crankcase pressure regulator in the system to maintain a given saturated suction temperature, thereby controlling bhp requirement, or
2. Install a current sensing device so that the motor current draw does not exceed the maximum rated motor current.

Drive Packages — Table 9 indicates drive package components for 5F,H standard belt drive packages. Figure 9 and Tables 10 and 11 indicate data for the flywheel used in each of these packages.

Approved Oils

FOR HFCs

Carlyle has approved the following UL listed refrigerants **R-134a, R-404A, R-407A, R-407C, R-407F, R-448A, R-449A, R-450A, R-452A, R-507, and R-513A** for use in 5F and 5H compressors.

The following POLYOL-ESTER (POE) are approved oils for HFCs:

Totaline® (see note 5)	P903-1001, 1701
Castrol (see Note 5)	E68
ICI Emkarate	RL68H
CPI	CP-2916S
CPI	Solest 68
BP Marine Enersyn	MP-S68

All POE oils are very hygroscopic (will readily pick up and retain mosture from the air) and should be used completely once the container is opened. It is extremely difficult to reseal the oil container effectively enough to prevent moisture absorption, which in turn forms damaging acids.

NOTES:

1. The use of any non-approved refrigerant may be dangerous and may void the warranty. Contact the Carlyle Compressor engineering department before using any refrigerant or oil not listed in this guide as approved for use in a Carlyle semi-hermitic compresor.
2. Using the wrong type or weight of oil for the refrigerant selected will void the warranty.

3. Follow the refrigerant and/or oil manufacturer instructions when installing or retrofitting.
4. Castrol SW68 (Totaline® P903-1001) is approved for use in Carrier chiller applications as well as Carrier and Carlyle semi-hermetic compressors for air conditioning and medium temperature applications. **Castrol SW68 (Totaline® P903-1001) cannot be used in any new low temperature refrigeration applications using Carlyle OEM semi-hermetic compressors. Castrol E68 is approved for use in Carlyle OEM compressors for low, medium, and high temperature ranges.**
5. All HFC/POE applications require a crankcase heater.
6. Moisture must be kept below 50 ppm for POE oils.
7. In retrofit applications, a high flow oil pump is required.

For HFCs not listed above, please contact Carlyle Engineering for oil recommendations.

FOR Ammonia

AMMONIA R-717: CAMCO-717-H Oil

For CFCs

Carlyle has historically approved the following UL listed refrigerants R-22, R-500, and R-502 for use in 5F and 5H compressors.

The following MINERAL/ALKYLBENZINE are approved oils for CFCs:

Totaline® P903-2001

Witco Suniso 3GS

Shrieve Chemical Zerol 150

Texaco Capella WFI-32-150

IGI Petroleum Ind CRYOL-150

NOTE: For CFCs not listed above, please contact Carlyle Engineering for oil recommendations.

Table 8 — Compressor Starting Torques

COMPRESSOR SIZE	% UNLOADING DURING STARTING	SATURATED DISCHARGE TEMPERATURE (F)								
		80°F			100°F			120°F		
		R-134a	R-22	R-507/404A	R-134a	R-22	R-507/404A	R-134a	R-22	R-507/404A
		Maximum Starting Torque (lb-ft)								
5F20	None	19	30	32	27	42	45	34	53	57
5F30	None	22	34	37	30	47	50	39	61	65
5F40	75	18	28	30	25	39	42	32	50	53
5F60	$66^2/_3$	22	34	37	30	47	50	39	61	65
5H40	75	42	65	70	57	89	95	74	115	123
5H46	75	53	81	87	71	111	119	92	144	154
5H60	$66^2/_3$	51	79	85	69	107	115	90	140	149
5H66	$66^2/_3$	64	99	106	86	134	144	113	175	186
5H80	75	58	90	96	79	123	130	102	158	169
5H86	75	73	113	120	99	154	162	127	197	212
5H120	$66^2/_3$	91	141	151	123	191	204	160	249	266
5H126	$66^2/_3$	114	176	189	154	239	255	200	311	332

NOTE: R-507/R-404A starting torque values apply to R-448A and R-449A.

Table 9 — Belt Drive Packages

DRIVE PACKAGE PART NUMBER	COMPR SIZE	HP	FRAME	SHAFT DIAM (IN.)	COMPR RPM	CENTER TO CENTER (IN.)	FLYWHEEL		PULLEY		BELTS	
							Pkg No.	OD	Pkg No.	PD	Pkg No.	No. of Belts
5F20-A181	5F20	3	182T	1 1/8	1750	19.3	5F20-394	7.5	5F20-861	7.4	5F20-851	2
	5F20	5	184T	1 1/8	1750	19.3	5F20-394	7.5	5F20-861	7.4	5F20-851	2
	5F30	5	184T	1 1/8	1750	19.3	5F20-394	7.5	5F20-861	7.4	5F20-851	2
5F20-A191	5F20	3	182T	1 1/8	1450	20.2	5F20-394	7.5	5F20-881	6.2	5F20-851	2
	5F30	5	184T	1 1/8	1450	20.2	5F20-394	7.5	5F20-881	6.2	5F20-851	2
5F20-A201	5F20	7.5	213T	1 3/8	1750	19.3	5F20-394	7.5	5F20-891	7.4	5F20-851	2
	5F20	10	215T	1 3/8	1750	19.3	5F20-394	7.5	5F20-891	7.4	5F20-851	2
	5F30	7.5	213T	1 1/8	1750	19.3	5F20-394	7.5	5F20-891	7.4	5F20-851	2
	5F30	10	215T	1 3/8	1750	19.3	5F20-394	7.5	5F20-891	7.4	5F20-851	2
5F20-A211	5F20	7.5	213T	1 3/8	1450	20.2	5F20-394	7.5	5F20-901	6.2	5F20-851	2
	5F30	7.5	213T	1 3/8	1450	20.2	5F20-394	7.5	5F20-901	6.2	5F20-851	2
	5F30	10	215T	1 3/8	1450	20.2	5F20-394	7.5	5F20-901	6.2	5F20-851	2
5F30-A201	5F30	15	254T	1 5/8	1750	19.3	5F30-394	7.5	5F30-921	7.4	5F30-831	3
5F40-A181	5F40	7.5	213T	1 5/8	1750	26.6	5F40-394	9.5	5F30-881	9.4	5F40-841	3
	5F40	10	215T	1 3/8	1750	26.6	5F40-394	9.5	5F30-881	9.4	5F40-841	3
	5F60	10	215T	1 3/8	1750	26.6	5F40-394	9.5	5F30-881	9.4	5F40-841	3
5F40-A191	5F40	7.5	213T	1 3/8	1450	25.5	5F40-394	9.5	5F40-891	8.0	5F30-841	3
	5F40	10	215T	1 3/8	1450	25.5	5F40-394	9.5	5F30-891	8.0	5F30-841	3
	5F60	10	215T	1 3/8	1450	25.5	5F40-394	9.5	5F30-891	8.0	5F30-841	3
5F40-A201	5F40	15	254T	1 5/8	1750	26.6	5F40-394	9.5	5F40-871	9.4	5F40-841	3
	5F40	20	256T	1 5/8	1750	26.6	5F40-394	9.5	5F40-871	9.4	5F40-841	3
	5F60	15	254T	1 5/8	1750	26.6	5F40-394	9.5	5F40-871	9.4	5F40-841	3
	5F60	20	256T	1 5/8	1750	26.6	5F40-394	9.5	5F40-871	9.4	5F40-841	3
5F40-A211	5F40	15	254T	1 5/8	1450	25.5	5F40-394	9.5	5F30-901	8.0	5F30-841	3
	5F60	15	254T	1 5/8	1450	25.5	5F40-394	9.5	5F30-901	8.0	5F30-841	3
	5F60	20	256T	1 5/8	1450	25.5	5F40-394	9.5	5F30-901	8.0	5F30-841	3
5F60-A191	5F60	25	284T	1 7/8	1750	26.6	5F40-394	9.5	5F40-881	9.4	5F40-841	3
5F60-A211	5F60	25	284T	1 7/8	1450	25.5	5F40-394	9.5	5F40-891	8.0	5F30-841	3
5H40-911	5H40	20	256T	1 5/8	1750	32.2	5H40-394	11.0	5H40-811	11.0	5H40-861	3
5H40-921	5H40	20	256T	1 5/8	1450	30.7	5H40-394	11.0	5H60-811	9.0	5H60-861	3
5H40-931	5H40	25	284T	1 7/8	1750	32.2	5H40-394	11.0	5H80-811	11.0	5H40-861	3
	5H40	30	286T	1 7/8	1750	32.2	5H40-394	11.0	5H80-811	11.0	5H40-861	3
	5H60	30	286T	1 7/8	1750	32.2	5H40-394	11.0	5H80-811	11.0	5H40-861	3
5H40-941	5H40	25	284T	1 7/8	1450	30.7	5H40-394	11.0	5H120-811	9.0	5H60-861	3
	5H40	30	286T	1 7/8	1450	30.7	5H40-394	11.0	5H120-811	9.0	5H60-861	3
	5H60	30	286T	1 7/8	1450	30.7	5H40-394	11.0	5H120-811	9.0	5H60-861	3
5H40-951	5H40	40	324T	2 1/8	1750	32.2	5H40-394	11.0	5H40-821	11.0	5H40-861	3
	5H40	50	326T	2 1/8	1750	32.2	5H40-394	11.0	5H40-821	11.0	5H40-861	3
	5H60	40	324T	2 1/8	1750	32.2	5H40-394	11.0	5H40-821	11.0	5H40-861	3
5H40-961	5H40	40	324T	2 1/8	1450	30.7	5H60-394	11.0	5H60-821	9.0	5H80-861	5
	5H40	50	326T	2 1/8	1450	30.7	5H60-394	11.0	5H60-821	9.0	5H80-861	5
	5H60	40	324T	2 1/8	1450	30.7	5H60-394	11.0	5H60-821	9.0	5H80-861	5
	5H60	50	326T	1 1/8	1450	30.7	5H60-394	11.0	5H60-821	9.0	5H80-861	5
5H60-921	5H60	50	326T	2 1/8	1750	32.2	5H60-394	11.0	5H80-821	11.0	5H120-861	5
5H60-931	5H80	60	364T	2 3/8	1750	36.7	5H60-394	11.0	5H120-821	11.0	5H40-871	5
	5H80	75	365T	2 3/8	1750	36.7	5H60-394	11.0	5H120-821	11.0	5H40-871	5
	5H120	60	364T	2 3/8	1750	36.7	5H60-394	11.0	5H120-821	11.0	5H40-871	5
	5H120	75	365T	2 3/8	1750	36.7	5H60-394	11.0	5H120-821	11.0	5H40-871	5
5H60-941	5H60	60	364T	2 3/8	1750	32.8	5H60-394	11.0	5H120-821	11.0	5H120-861	5
	5H60	75	365T	2 3/8	1750	32.8	5H60-394	11.0	5H120-821	11.0	5H120-861	5
5H80-911	5H80	40	324T	2 1/8	1750	36.7	5H60-394	11.0	5H80-821	11.0	5H40-871	5
	5H80	50	326T	2 1/8	1750	36.7	5H60-394	11.0	5H80-821	11.0	5H40-871	5
5H80-921	5H80	40	324T	2 1/8	1450	38.2	5H60-394	11.0	5H60-821	9.0	5H40-871	5
	5H80	50	326T	2 1/8	1450	38.2	5H60-394	11.0	5H60-821	9.0	5H40-871	5
5H80-931	5H80	60	364T	2 3/8	1450	38.2	5H60-394	11.0	5H60-831	9.0	5H40-871	5
	5H120	60	364T	2 3/8	1450	38.2	5H60-394	11.0	5H60-831	9.0	5H40-871	5
5H80-941	5H80	75	365T	2 3/8	1450	38.2	5H80-394	11.0	5H80-831	9.0	5H80-871	6
5H120-941	5H120	75	365T	2 3/8	1450	38.2	5H120-394	11.0	5H80-831	9.0	5H80-871	6
5H80-951	5H80	100	404T	2 7/8	1750	36.7	5H120-394	11.0	5H120-831	11.0	5H120-871	9
	5H120	100	404T	2 7/8	1750	36.7	5H120-394	11.0	5H120-831	11.0	5H120-871	9
5H120-911	5H120	100	404T	2 7/8	1450	38.2	5H120-394	11.0	5H40-841	9.0	5H120-871	9

LEGEND

PD — Pitch Diameter (in.)

NOTE:
Compressor shaft diameter before taper begins:
5F20, 30=1.0 in.
5F40, 60=1.5 in.
All 5H=2.0

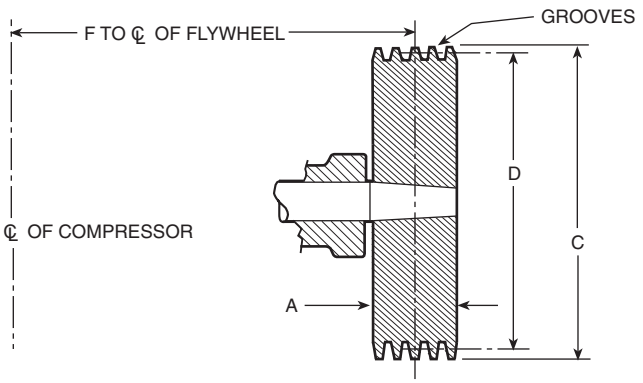

Fig. 9 — Flywheel

Table 10 — Flywheel Data

FLYWHEEL PACKAGE NUMBER	FLYWHEEL MODEL	WIDTH A (IN.)*	OD C (IN.)*	PITCH DIAM D (IN.)*	GROOVES (NO. AND TYPE)
5F20-394	5F20-1053	1 3/4	8.0	7.5	2-B
5F30-394	5F30-1053	2 1/2	8.0	7.5	3-B
5F40-394	5F40-1054	2 1/2	10.0	9.5	3-B
5F60-394	5F60-1054	3 1/8	10.0	9.5	4-B
5H40-394	5H40-1104	3 3/8	11.75	11.0	3-C
5H60-394	5H60-1104	5 3/8	11.75	11.0	5-C
5H80-394	5H80-1104	6 3/8	11.75	11.0	6-C
5H120-394	5H120-1104	9 3/8	11.75	11.0	9-C

*Refer to Fig. 9.

Table 11 — Flywheel — Compressor Dimensions

COMPRESSOR MODEL	FLYWHEEL MODEL	DIMENSIONS F (IN.)*
5F20	5F20-1053	6 7/8
5F30	5F20-1053	8 5/8
	5F30-1053	8 3/4
5F40	5F40-1054	10 5/8
5F60	5F40-1054	11 5/8
	5F60-1054	11 3/4
5H40	5H40-1104	13 1/4
	5H60-1104	13 11/16
5H60	5H40-1104	14
	5H60-1104	14 7/16
5H80	5H40-1104	20
	5H60-1104	20 7/16
	5H80-1104	18 9/16
	5H120-1104	21 5/16
5H120	5H60-1104	20 11/16
	5H120-1104	21 9/16

*Refer to Fig. 9.

BOOSTER COMPRESSORS FOR REFRIGERANT 22 AND 507/404A

Booster Application Data — The following data supplements the single-stage compressor application data, and adds information pertaining to booster application only. Refer to the single-stage compressor data for all other information.

Rating Basis — All booster ratings are given in refrigeration effect and are based on:

1. Use of a liquid-suction heat interchanger. All liquid-suction interchangers should have a bypass connection on the liquid side so that adjustment can be made in event that too much superheating of suction gas causes excessive heating of compressor.
2. Use of only half of the standard number of suction valve springs per cylinder. All 5F,H compressors are factory assembled with the standard number of suction valve springs; therefore, one-half of the springs per cylinder must be removed in the field for booster applications.
3. Booster ratings are based on 1750 rpm compressor speed.

R Factors — In a multistage compression system, the intermediate or high-stage compressor must have sufficient capacity to handle the low-stage (booster) compressor load plus heat added to refrigerant gas by a low-stage machine during compression. Likewise, if an intermediate stage compressor should be used, the high-stage compressor must have sufficient capacity to handle the intermediate stage compressor load plus heat added to the refrigerant gas by an intermediate stage machine during compression.

To assist in the selection of higher stage compressors, Table 12 presents "R" factors that depict approximate required relationship between stages at various saturated temperature conditions.

To determine the required capacity of a higher stage compressor, multiply lower stage compressor capacity by the proper "R" factor from Table 12. Any additional loads handled at intermediate pressure must be added to this figure to arrive at the total higher stage load.

Multistage System Pointers — A staged system is essentially a combination of 2 or more simple refrigerant cycles. In combining 2 or more simple flow cycles to form a staged system for low temperature refrigeration, 2 basic types of combinations are common.

DIRECT STAGING — Involves use of compressors, in series, compressing a single refrigerant.

CASCADE STAGING — Usually employs 2 or more refrigerants of progressively lower boiling points. Compressed refrigerant of low stage is condensed in an exchanger (cascade condenser) that is cooled by evaporation of another lower pressured refrigerant in the next higher stage.

Safety Factors — Use of capacity safety factors in selecting booster compressors must be a matter of judgment when making selection.

Factors that have a bearing on satisfactory compressor selections are: accuracy of load estimate, amount of safety factor included in the total load, degree of importance of meeting specified capacity at given condition, temperature level of operation and magnitude of refrigeration load. All of the factors must be recognized when considering the use of a capacity safety factor in selecting a booster compressor.

When a capacity safety factor is used, the compressor is selected at its maximum speed to handle design load plus safety factor (Fig. 10). Multiplying factors for non-standard speeds are shown in Fig. 11.

Whether or not added capacity offered by the safety factor is incorporated at once is a matter of judgment. If it is, then the compressor will be operated at maximum speed at the start and any excess capacity achieved will be reflected in faster pulldowns or lower temperatures. It is also a good practice to drive the machine at a speed that will provide slightly more rated capacity than is required by design load. Additional speed-up available will then constitute reserve capacity in the event it is needed. Motors should be sized to run the compressor at maximum speed to forestall any motor changes, should this maximum compressor speed be required in the future.

Table 12 — Booster "R" Factors

SUCT TEMP (F)	R-22 DISCHARGE TEMPERATURE (F)								
	–50	–40	–30	–20	–10	0	10	20	30
–100	1.261	1.310	1.360	1.410	1.453	—	—	—	—
	1.221	1.271	1.319	1.371	1.414	—	—	—	—
–90	1.214	1.263	1.313	1.361	1.407	1.448	—	—	—
	1.175	1.221	1.270	1.321	1.368	1.408	—	—	—
–80	1.170	1.218	1.269	1.315	1.360	1.400	1.434	—	—
	1.129	1.172	1.221	1.271	1.319	1.359	1.394	—	—
–70	—	1.172	1.221	1.269	1.313	1.351	1.388	1.424	—
	—	1.125	1.173	1.221	1.270	1.311	1.348	1.382	—
–60	—	—	1.178	1.220	1.267	1.303	1.340	1.377	1.406
	—	—	1.125	1.172	1.221	1.263	1.300	1.337	1.367
–50	—	—	—	1.175	1.219	1.256	1.291	1.329	1.360
	—	—	—	1.123	1.173	1.217	1.252	1.289	1.319
–40	—	—	—	—	1.171	1.209	1.245	1.281	1.311
	—	—	—	—	1.126	1.169	1.205	1.241	1.261
–30	—	—	—	—	—	1.160	1.199	1.233	1.265
	—	—	—	—	—	1.121	1.159	1.196	1.227

Air-Cooled Cylinder Heads

Water-cooled Cylinder Heads

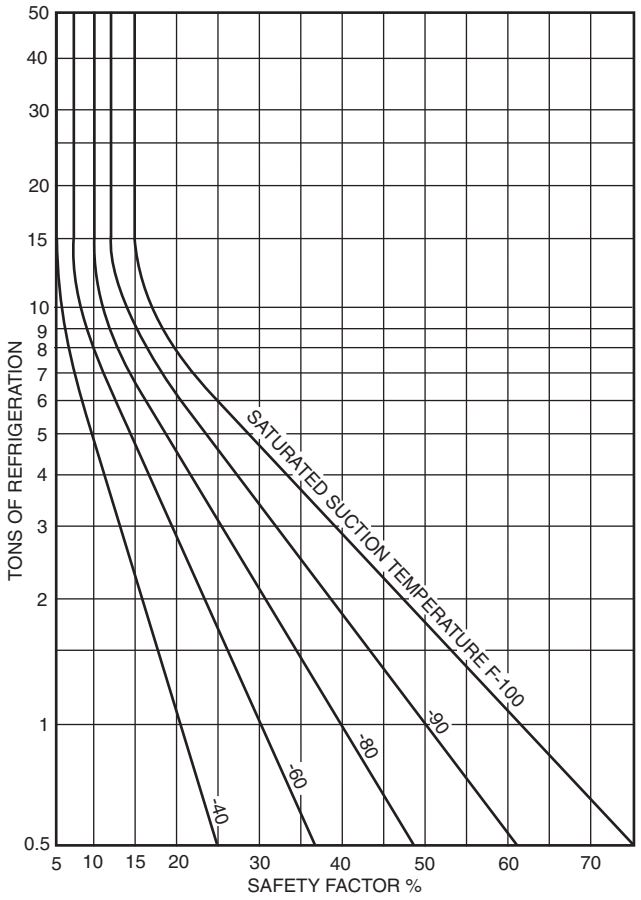

Fig. 10 — Booster Compressor Selection Safety Factors

Determining Intermediate Pressure — In application of commercial compressors to staged systems, the lowest total bhp per ton and most economical equipment selection results when using approximately equal compression ratios for each stage. It is also economical to juggle assigned compression ratios to fit available sizes of machines.

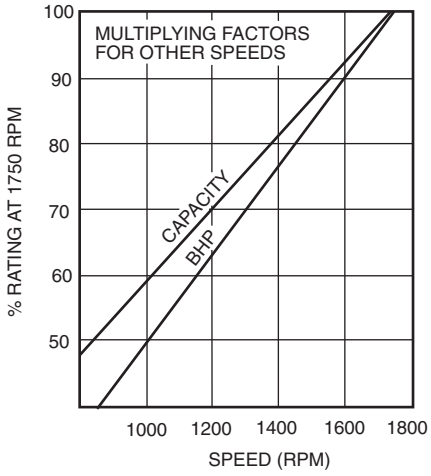

Fig. 11 — Multiplying Factors — Nonstandard Speeds

The use of Fig. 12 will allow direct determination of proper intermediate pressure that will result in equal compression ratios per stage for a direct 2-stage system. Information in Fig. 12 is given in terms of saturated temperature instead of pressures, for easier use with compressor ratings.

Existence of a second appreciable load, at some higher suction pressure level, will often dictate the most convenient intermediate pressure.

Gas De-superheating — Operation of a direct staged system requires cooling of the gas between stages; otherwise, highly superheated discharge gas from low-stage machine would be taken directly into the suction of higher stage compressor and further compression would result in excessive heating of this compressor.

Liquid Cooling — It is also necessary to employ liquid cooling between stages and increase refrigeration effect of liquid delivered to evaporator to realize rated capacity of booster compressor. Amount of refrigeration expended in cooling liquid between stages is accomplished more economically at the level of high-stage compressor suction than at the level of low-stage suction.

In open-type systems, refrigerant liquid is cooled down to the saturation temperature corresponding to intermediate pressure. In closed-type systems, good intercooler design usually results in refrigerant liquid being cooled down to 10 to 20 degrees above saturation temperature corresponding to intermediate pressure.

Oil Separators and Lubrication — In cascade-type systems, where evaporators and suction lines are properly designed for oil return to the compressor, oil separators are usually not used.

In direct stage systems, however, oil may tend to accumulate in one of the stages and thus result in lack of lubrication in other machine. By use of oil transfer lines, equalization of oil level between crankcases can be achieved by manual operation at periodic intervals. Automatic control of proper oil return to both compressors is effected by use of a high stage discharge line oil separator, returning oil to high stage machine, and a high side float, connected to high stage machine crankcase, which continually drains excess oil from this crankcase down to the next lower stage compressor.

For booster application, factory oil charge should be drained and replaced with a suitable viscosity oil for low temperature application.

Control Pressurestat for Booster Application — The standard dual pressure switch furnished with the 5F,H compressor cannot be used for booster application. Replace it with an appropriate low temperature dual pressurestat that can operate at values shown in Table 13. Any commercial pressure switch is acceptable.

Table 13 — Control Pressurestats for Low Stage Application

CHARACTERISTICS		R-22 OR R-507/404A
Switch Action	— High	Open on pressure rise
	— Low	Open on pressure fall
Range	— High	30″ Vac to 110 psig
	— Low	30″ Vac to 25 psig
Differential	— High	12 to 30 psi adjust.
	— Low	9 to 30 psi adjust.
Max Pressure	— High	300 psig
	— Low	300 psig

Discharge Valve Springs — When 5H compressors are used for booster applications where discharge pressure is below 10 psig, the standard discharge valve springs furnished with the machine should be replaced with an equal number of lighter weight springs, Part Number 5H41-1801. No change in discharge valve springs is recommended for 5F compressors.

Water-Cooled Heads — Standard 5F,H compressors are not equipped with water-cooled heads but they are available. For applications involving high compression ratios, 5 or above, 5F,H booster compressors should be equipped with water-cooled heads.

Motor Selection Data — In staged refrigeration systems, the high stage compressor starts first and runs until low stage pressure has been reduced to a predetermined level before the low stage machine starts. With direct staged arrangements, the high stage machine draws gas from the evaporator through low stage machine bypass during this initial period. Size of the selected motor must be related to the maximum condition at which booster compressor can operate.

Compressor may run under heavy loads during periods of high suction pressure, especially on starting when system is warm. To handle these situations the motor must be sized larger than the actual balanced operation brake horsepower indicates, or special attention must be paid to operation of the system when starting initially. Tables 14 and 15 give balanced brake horsepower values at 1750 rpm.

If the system is to operate only at a fixed low temperature, it is possible to avoid oversizing of motors providing careful operation is followed when the system is first put in operation.

On applications requiring reduction from ambient conditions to some extremely low temperature, the compression system will be operated at high suction pressures for considerable periods of time. General practice is to drive the high stage compressor with a motor that will operate compressor at the highest expected evaporator temperature. This is generally the "air conditioning" rating of unit. For intermediate or low stage compressors, it is generally sufficient to size motor to take care of double the balance load indicated horsepower plus friction horsepower.

Also consider compressor starting torque requirements when selecting motor for a booster compressor. Starting torque of a motor only large enough to provide required normal operating bhp for booster applications may not be large enough to start the compressor. Recommended minimum motor sizes shown in Table 16 have been selected to assure adequate starting torque. Actual motor size selected is usually larger, depending on the maximum bhp conditions under which the compressor will run during pulldown or other abnormal operating periods.

It is good practice to select motors with allowance for 10% voltage reduction unless there is a certainty that this cannot occur.

Compressor Starting Torque — Required compressor starting torque is dependent on the discharge pressure as well as the pressure differential occurring during start-up. Maximum expected torque required during the starting period for 5F,H compressors, used as boosters, is shown in Table 16 at 2 saturated discharge temperatures.

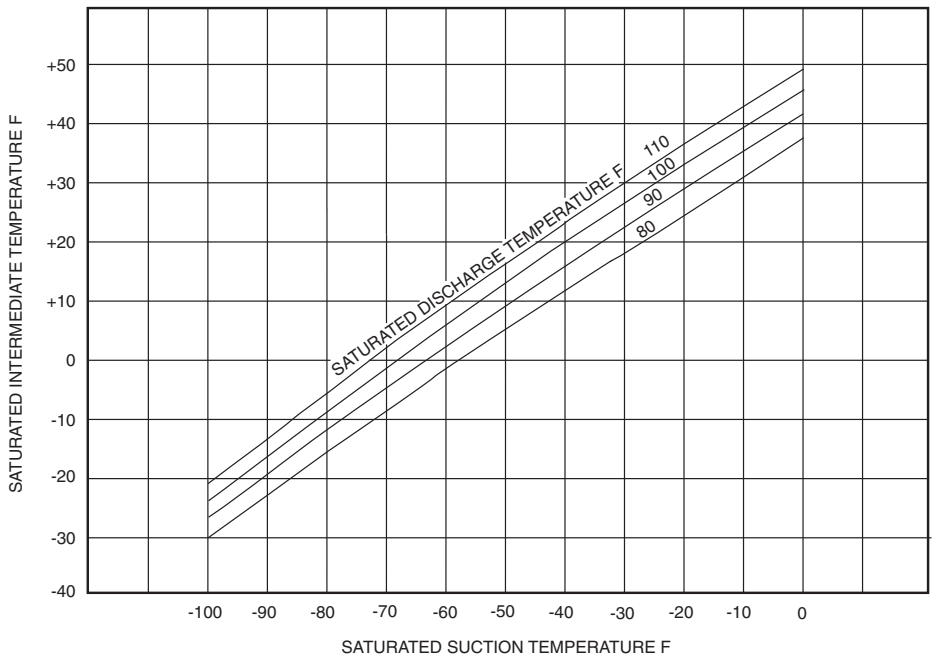

Fig. 12 — Optimum Intermediate Temperature for 2-Stage Compression (Incorporating Equal Compression Ratios per Stage)

Table 14 — 5F,H Booster Ratings; R-22

SST	SDT*	5F20		5F30		5F40		5F60	
		CAP.	BHP	CAP.	BHP	CAP.	BHP	CAP.	BHP
–100	–50	0.27	0.95	0.40	1.35	0.54	1.75	0.80	2.25
	–40	0.22†	1.00	0.33†	1.36	0.43†	1.75	0.65†	2.45
	–30	0.18†	1.05	0.28†	1.38	0.37†	1.80	0.55†	2.50
	–20	0.15†	1.10	0.23†	1.38	0.30†	1.80	0.45†	2.60
	–10	0.10†	1.15	0.15†	1.40	0.20†	1.85	0.30†	2.70
–90	–50	0.42	1.05	0.62	1.53	0.83	1.95	1.40	2.65
	–40	0.38	1.11	0.56	1.55	0.75	1.95	1.10	2.75
	–30	0.35†	1.14	0.53†	1.58	0.70†	2.00	1.10†	2.80
	–20	0.29†	1.19	0.44†	1.59	0.58†	2.00	0.88†	2.81
	–10	0.27†	1.24	0.40†	1.61	0.54†	2.05	0.80†	2.90
	0	0.24†	1.23	0.36†	1.62	0.48†	2.10	0.73†	3.00
–80	–50	0.63	1.25	0.94	1.80	1.30	2.20	1.90	3.20
	–40	0.57	1.25	0.85	1.81	1.10	2.20	1.70	3.25
	–30	0.54	1.28	0.81	1.82	1.10	2.25	1.60	3.30
	–20	0.50	1.30	0.75	1.85	1.10	2.25	1.50	3.35
	–10	0.46†	1.33	0.69†	1.86	0.92†	2.30	1.40†	3.40
	0	0.43†	1.36	0.65†	1.90	0.87†	2.30	1.30†	3.50
	10	0.36†	1.39	0.53†	1.91	0.71†	2.40	1.10†	3.50
–70	–40	0.83	1.45	1.20	2.11	1.70	2.70	2.50	3.94
	–30	0.79	1.48	1.20	2.15	1.60	2.72	2.40	4.00
	–20	0.75	1.50	1.10	2.18	1.50	2.72	2.20	4.05
	–10	0.71	1.53	1.10	2.19	1.40	2.80	2.10	4.10
	0	0.67†	1.59	1.00†	2.20	1.30†	2.85	2.00†	4.17
	10	0.59†	1.50	0.89†	2.21	1.20†	3.00	1.80†	4.20
	20	0.51†	1.55	0.75†	2.22	1.00†	3.00	1.60†	4.42
–60	–30	1.10	1.75	1.70	2.45	2.40†	3.30	3.40	4.78
	–20	1.10	1.79	1.60	2.48	2.10	3.30	3.20	4.80
	–10	1.00	1.82	1.60	2.60	2.10	3.40	3.10	5.00
	0	0.99	1.88	1.50	2.62	2.00	3.50	3.00	5.08
	10	0.91†	1.81	1.40†	2.65	1.80†	3.60	2.70†	5.25
	20	0.82†	1.82	1.20†	2.68	1.60†	3.57	2.50†	5.29
	30	0.73†	1.84	1.10†	2.70	1.50†	3.50	2.20†	5.40
–50	–20	1.50	2.12	2.30	3.05	3.00	4.00	4.60	5.50
	–10	1.40	2.16	2.20	3.10	2.90	4.10	4.30	6.00
	0	1.40	2.10	2.20	3.15	2.90	4.15	4.30	6.19
	10	1.30	2.23	2.00	3.25	2.60	4.25	4.00	6.28
	20	1.20	2.22	1.90	3.30	2.50	4.30	3.70	6.40
	30	1.20†	2.28	1.70†	3.31	2.30†	4.20	3.50†	6.50
–40	–10	1.90	2.60	2.90	3.50	3.90	4.88	5.80	7.50
	0	1.90	2.50	2.80	3.88	3.80	5.08	5.60	7.68
	10	1.80	2.78	2.70	4.17	3.60	5.40	5.40	7.96
	20	1.70	2.82	2.60	4.08	3.50	5.40	5.20	8.09
	30	1.70	2.85	2.50	4.17	3.30	5.50	5.00	8.19
–30	0	2.40	2.85	3.60	5.19	4.80	7.40	7.30	9.78
	10	2.30	3.60	3.50	5.34	4.60	7.58	7.00	10.00
	20	2.30	3.62	3.40	5.44	4.50	7.00	6.80	10.10
	30	2.20	3.70	3.30	5.47	4.40	7.87	6.60	10.20

SST	SDT*	5H40		5H46		5H60		5H66	
		CAP.	BHP	CAP.	BHP	CAP.	BHP	CAP.	BHP
–100	–50	1.30	3.10	1.60	4.03	1.90	5.50	2.40	7.15
	–40	1.10†	3.50	1.30†	4.55	1.60†	5.58	2.00†	7.25
	–30	0.92†	3.50	1.10†	4.55	1.40†	5.78	1.70†	7.50
	–20	0.79†	3.68	0.97†	4.78	1.20†	6.00	1.50†	7.80
	–10	0.67†	3.75	0.83†	4.87	1.00†	6.08	1.20†	7.90
–90	–50	1.90	3.70	2.30	4.80	2.90†	6.18	3.60	8.03
	–40	1.70	3.98	2.10	5.17	2.60	6.40	3.20	8.31
	–30	1.60†	4.04	2.00†	5.25	2.40†	6.58	3.00†	8.55
	–20	1.04†	4.09	1.70†	5.31	2.10†	6.58	2.60†	8.55
	–10	1.30†	4.14	1.60†	5.38	2.00†	6.65	2.50†	8.64
	0	1.20†	4.19	1.50†	5.44	1.80†	6.75	2.20†	8.77
–80	–50	2.80	4.49	3.50	5.84	4.30	7.30	5.30	9.48
	–40	2.60	4.79	3.20	6.22	3.90	7.50	4.80	9.74
	–30	2.40	4.89	3.00	6.35	3.60	7.68	4.50	9.97
	–20	2.30	4.94	2.80	6.41	3.40	7.78	4.20	10.10
	–10	2.20†	5.00	2.70†	6.50	3.30†	7.88	4.10†	10.20
	0	1.90†	5.12	2.30†	6.65	2.90†	7.99	3.60†	10.40
	10	1.70†	5.25	2.10†	6.82	2.50†	8.00	3.10†	10.40
–70	–40	3.80	5.90	4.70†	7.66	5.80	9.18	7.20	11.90
	–30	3.60	5.98	4.40	7.77	5.40	9.28	6.70	12.10
	–20	3.30	5.97	4.10	7.75	5.00	9.28	6.20	12.10
	–10	3.30	6.08	4.10	7.90	4.90	9.50	6.10	12.40
	0	3.10†	6.19	3.80	8.04	4.60†	9.75	5.70†	12.70
	10	2.70†	6.25	3.30†	8.42	4.10†	10.00	5.10†	13.00
	20	2.40†	6.25	2.90†	8.12	3.60†	10.10	4.50†	13.10
–60	–30	5.20	7.08	6.40†	9.19	7.80	11.30	9.70	14.70
	–20	4.90	7.28	6.10	9.45	7.40	11.60	9.20	15.10
	–10	4.80	7.34	5.90	9.53	7.20	11.80	8.90	15.40
	0	4.50	7.70	5.60	10.00	6.80	12.10	8.40	15.70
	10	4.10†	7.75	5.10†	10.05	6.20†	12.30	7.70†	16.00
	20	3.80†	7.75	4.70†	10.05	5.60†	12.30	6.90†	16.00
	30	3.50†	7.87	4.30†	10.20	5.20†	12.50	6.40†	16.30
–50	–20	6.90	8.88	8.50	11.50	10.30	14.00	12.80	18.20
	–10	6.80	9.00	8.40	11.70	10.20	14.50	12.60	18.90
	0	6.40	9.25	7.90	12.00	9.60	14.60	11.90	19.00
	10	6.00	9.50	7.40	12.30	9.30	14.70	11.50	19.10
	20	5.60	9.66	6.90	12.60	8.50	15.00	10.50	19.50
	30	5.30†	9.75	6.60†	12.70	7.90†	15.10	9.80†	19.60
–40	–10	9.00	10.30	11.20	13.40	13.60	17.20	16.90	22.40
	0	8.70	11.60	10.50	15.10	13.00	17.70	16.10	23.00
	10	8.20	12.00	10.20	15.60	12.30	18.20	15.30	23.60
	20	7.90	12.30	9.80	16.00	11.90	18.60	14.80	24.20
	30	7.70	12.40	9.50	16.10	11.50	18.90	14.30	24.20
–30	0	11.50	15.10	14.30	19.60	17.20	22.50	21.20	29.20
	10	11.10	15.50	13.70	20.10	16.70	23.20	20.70	30.10
	20	10.90	15.80	13.50	20.50	16.30	24.00	20.00	31.20
	30	10.60	16.10	13.10	20.90	15.90	24.60	19.70	32.00

SST	SDT*	5H80		5H86		5H120		5H126	
		CAP.	BHP	CAP.	BHP	CAP.	BHP	CAP.	BHP
–100	–50	2.50	7.00	3.10	9.10	3.80	9.50	4.70	12.40
	–40	2.20†	7.25	2.70†	9.40	3.30†	9.60	4.10†	12.50
	–30	1.80†	7.50	2.20†	9.70	2.80†	10.10	3.50†	13.10
	–20	1.60†	7.75	2.00†	10.10	2.40†	10.50	3.00†	13.70
	–10	1.30†	8.12	1.60†	10.00	2.00†	10.60	2.50†	13.80
–90	–50	3.80	8.00	4.70	10.40	5.80	10.90	7.20	14.20
	–40	3.40	8.25	4.20	10.70	5.10	11.30	6.30	14.70
	–30	3.20†	8.50	4.00†	11.00	4.80†	11.60	5.90†	15.10
	–20	2.80†	8.87	3.50†	11.50	4.30†	11.60	5.30†	15.10
	–10	2.70†	9.00	3.30†	11.70	4.00†	11.80	5.00†	15.40
	0	2.30†	9.00	2.80†	11.70	3.50†	12.00	4.30†	15.60
–80	–50	5.70†	9.50	7.10	12.40	8.50†	13.10	10.50	17.10
	–40	5.20	10.00	6.40	13.00	7.80	13.50	9.70	17.50
	–30	4.80	10.30	5.90	13.40	7.30	13.90	9.00	18.10
	–20	4.50	10.50	5.60	13.70	6.80	14.10	8.40	18.30
	–10	4.30†	10.60	5.30†	13.80	6.50†	14.30	8.10†	18.60
	0	3.80†	10.60	4.70†	13.80	5.80†	14.50	7.20†	18.90
	10	3.30†	10.80	4.10†	14.00	5.00†	14.50	6.20†	18.90
–70	–40	7.70	12.10	9.50	15.70	11.50	16.90	14.30	22.00
	–30	7.20	12.50	8.90	16.20	10.80	17.10	13.40	22.00
	–20	6.70	12.70	8.30	16.50	10.00	17.10	12.40	22.20
	–10	6.50	12.70	8.00	16.50	9.80	17.50	12.20	22.80
	0	6.20†	13.00	7.70†	16.90	9.30†	18.00	11.50	23.40
	10	5.40†	12.60	6.70†	16.40	8.10†	18.50	10.00†	24.00
	20	4.80†	13.30	5.90†	17.30	7.30†	18.70	9.00†	24.30
–60	–30	10.40	15.00	12.90	19.50	15.40	21.00	19.10	27.30
	–20	9.90†	15.20	12.30	19.80	14.80	21.80	18.30	28.40
	–10	9.60	15.50	11.90	20.20	14.40	22.00	17.90	28.60
	0	9.00	15.80	11.20	20.60	12.60	22.80	15.60	29.60
	10	8.20†	16.00	10.20†	20.80	12.30†	23.00	15.30†	29.90
	20	7.50†	16.40	9.30†	21.30	11.30†	23.00	14.00†	29.90
	30	6.90†	16.50	8.50†	21.40	10.40†	23.50	12.90†	30.60
–50	–20	13.70	18.70	17.00	24.30	20.60	26.50	25.50	34.40
	–10	13.50	19.00	16.70	24.70	20.30†	27.50	25.20	35.70
	0	12.90	19.20	16.00	25.00	19.30	27.70	23.90	36.00
	10	12.00	19.50	14.90	25.40	18.10	28.00	22.40	36.40
	20	11.30	20.00	14.00	26.00	16.90	28.50	20.90	37.00
	30	10.50†	20.20	13.00†	26.20	15.80†	28.80	19.60†	37.40
–40	–10	18.00	23.00	22.30	29.80	27.10	33.00	33.50	42.90
	0	17.40	23.70	21.60	30.80	26.00	34.00	32.20	44.20
	10	16.40	24.20	20.40	31.40	24.50	35.00	30.40	45.40
	20	15.90	25.00	19.70	32.50	23.80	38.20	29.50	49.70
	30	15.40	25.20	14.10	32.80	23.00	36.20	28.50	47.00
–30	0	22.90	29.00	28.40	37.70	34.40	43.50	42.60	56.50
	10	22.20	30.00	27.50	39.00	33.30	45.00	41.30	58.50
	20	21.70	31.00	26.90	40.30	35.60	46.50	44.10	60.40
	30	21.20	31.20	26.20	40.50	31.80	47.70	39.40	62.00

LEGEND

Bhp — Brake Horsepower
Cap. — Capacity (Tons)
SDT — Saturated Discharge Temperature (F)
SST — Saturated Suction Temperature (F)

*Also referred to as Saturated Intermediate Temperature.
†Requires water-cooled heads.

Table 15 — 5F,H Booster Ratings; R-404A / R-507

SST	SDT*	5F20		5F30		5F40		5F60	
		CAP.	BHP	CAP.	BHP	CAP.	BHP	CAP.	BHP
–90	–30	0.6	1.0	0.9	1.6	1.1	1.7	1.7	3.2
	–20	0.5	1.0	0.7	1.7	1.0	1.8	1.5	3.3
	–10	0.4	1.1	0.6	1.7	0.9	1.9	1.3	3.3
	0	0.3	1.0	0.5	1.7	0.7	1.9	1.1	3.3
	10	0.3	1.0	0.4	1.5	0.6	1.8	0.9	3.1
	20	0.2	0.9	0.3	1.5	0.5	1.7	0.7	2.9
	30	0.1	0.8	—	—	0.3	1.5	0.5	2.6
–80	–30	0.9	1.1	1.3	1.8	1.7	1.9	2.6	3.5
	–20	0.8	1.2	1.2	2.0	1.5	2.1	2.3	3.8
	–10	0.7	1.3	1.0	2.1	1.4	2.3	2.0	4.0
	0	0.6	1.3	0.9	2.1	1.2	2.4	1.8	4.1
	10	0.5	1.3	0.8	2.1	1.0	2.4	1.5	4.1
	20	0.4	1.3	0.6	2.0	0.9	2.4	1.3	4.0
	30	0.3	1.2	0.5	1.9	0.7	2.3	1.0	3.8
–70	–30	1.2	1.2	1.9	2.0	2.5	2.1	3.7	3.8
	–20	1.1	1.4	1.7	2.2	2.3	2.4	3.4	3.2
	–10	1.0	1.5	1.5	2.3	2.1	2.7	3.1	4.6
	0	0.9	1.6	1.4	2.5	1.8	2.9	2.8	4.8
	10	0.8	1.6	1.2	2.6	1.6	3.0	2.4	5.0
	20	0.7	1.7	1.1	2.6	1.4	3.1	2.1	5.1
	30	0.6	1.6	0.9	2.6	1.2	3.1	1.8	5.0
–60	–30	1.7	1.2	2.6	2.0	3.5	2.2	5.2	3.8
	–20	1.6	1.4	2.4	2.3	3.2	2.6	4.8	4.4
	–10	1.5	1.6	2.2	2.6	3.0	3.0	4.4	5.0
	0	1.3	1.8	2.0	2.8	2.7	3.3	4.0	5.5
	10	1.2	1.9	1.8	3.0	2.4	3.6	3.6	5.9
	20	1.1	2.0	1.6	3.1	2.1	3.8	3.2	6.2
	30	0.9	2.1	1.4	3.2	1.9	4.0	2.8	6.3
–50	–20	2.2	1.4	3.3	2.3	4.4	2.6	6.7	4.4
	–10	2.1	1.7	3.1	2.7	4.1	3.1	6.2	5.2
	0	1.9	2.0	2.8	3.1	3.8	3.6	5.7	6.0
	10	1.7	2.2	2.6	3.4	3.4	4.1	5.2	6.6
	20	1.5	2.4	2.3	3.6	3.1	4.4	4.7	7.1
	30	1.4	2.5	2.1	3.8	2.8	4.7	4.2	7.5
–40	–20	3.0	1.3	4.5	2.2	6.0	2.5	9.0	4.0
	–10	2.8	1.7	4.2	2.7	5.6	3.2	8.4	5.1
	0	2.6	2.0	3.9	3.2	5.2	3.8	7.7	6.2
	10	2.4	2.3	3.6	3.6	4.7	4.4	7.1	7.1
	20	2.2	2.6	3.3	4.0	4.3	4.9	6.5	7.9
	30	2.0	2.8	3.0	4.3	3.9	5.4	5.9	8.6
–30	–10	3.7	1.6	5.5	2.5	7.4	3.0	11.1	4.6
	0	3.4	2.0	5.2	3.1	6.9	3.8	10.3	6.0
	10	3.2	2.4	4.8	3.7	6.4	4.6	9.6	7.2
	20	2.9	2.8	4.4	4.3	5.9	5.3	8.8	8.4
	30	2.7	3.1	4.1	4.8	5.4	6.0	8.1	9.4

SST	SDT*	5H40		5H46		5H60		5H66	
		CAP.	BHP	CAP.	BHP	CAP.	BHP	CAP.	BHP
–90	–30	2.7	6.3	3.4	8.2	4.1	8.7	5.1	11.3
	–20	2.4	6.4	3.0	8.3	3.6	8.9	4.5	11.5
	–10	2.1	6.4	2.6	8.4	3.1	9.0	3.9	11.6
	0	1.8	6.4	2.2	8.3	2.7	8.9	3.3	11.5
	10	1.4	6.2	1.8	8.1	2.2	8.6	2.7	11.2
	20	1.1	5.9	1.4	7.7	1.7	8.2	2.2	10.7
	30	—	—	—	—	—	—	—	—
–80	–30	4.1	6.9	5.1	8.9	6.1	9.6	7.6	12.4
	–20	3.7	7.2	4.6	9.4	5.6	10.1	6.9	13.1
	–10	3.3	7.4	4.1	9.6	5.0	10.4	6.2	13.5
	0	2.9	7.5	3.6	9.8	4.4	10.6	5.4	13.8
	10	2.5	7.5	3.1	9.8	3.8	10.6	4.7	13.8
	20	2.1	7.4	2.6	9.6	3.2	10.4	4.0	13.5
	30	1.7	7.1	2.1	9.3	2.6	10.0	3.2	13.0
–70	–30	5.9	7.3	7.3	9.5	8.8	10.3	11.0	13.3
	–20	5.4	7.9	6.7	10.3	8.1	11.1	10.1	14.4
	–10	4.9	8.3	6.1	10.8	7.4	11.8	9.2	15.3
	0	4.4	8.7	5.5	11.3	6.6	12.3	8.2	16.0
	10	3.9	8.9	4.9	11.5	5.9	12.6	7.3	16.4
	20	3.4	8.9	4.2	11.6	5.2	12.8	6.4	16.6
	30	2.9	8.8	3.6	11.5	4.4	12.7	5.5	16.5
–60	–30	8.3	7.5	10.2	9.8	12.3	10.6	15.3	13.7
	–20	7.7	8.4	9.4	10.9	11.4	11.9	14.2	15.4
	–10	7.0	9.1	8.7	11.8	10.5	13.0	13.1	16.8
	0	6.4	9.7	7.9	12.6	9.6	13.9	11.9	18.0
	10	5.8	10.2	7.2	13.2	8.7	14.6	10.8	19.0
	20	5.2	10.5	6.4	13.7	7.8	15.1	9.7	19.6
	30	4.6	10.7	5.7	13.9	6.9	15.4	8.6	20.0
–50	–20	10.5	8.3	12.9	11.1	15.6	12.1	19.4	15.7
	–10	9.8	9.6	12.0	12.5	14.5	13.7	18.0	17.8
	0	9.0	10.6	11.1	13.7	13.4	15.2	16.7	19.7
	10	8.2	11.4	10.1	14.8	12.3	16.4	15.3	21.3
	20	7.5	12.0	9.2	15.6	11.2	17.4	13.9	22.6
	30	6.7	12.5	8.3	16.2	10.1	18.1	12.5	23.5
–40	–20	14.1	8.2	17.3	10.7	20.9	11.7	26.0	15.2
	–10	13.2	9.7	16.2	12.7	19.6	13.9	24.3	18.1
	0	12.2	11.1	15.1	14.4	18.2	16.0	22.6	20.7
	10	11.3	12.3	13.9	16.0	16.9	17.8	20.9	23.1
	20	10.4	13.3	12.8	17.3	15.5	19.3	19.2	25.1
	30	9.4	14.1	11.7	18.4	14.1	20.6	17.5	26.8
–30	–10	17.4	9.3	21.3	12.1	25.8	13.3	32.1	17.3
	0	16.3	11.1	20.0	14.5	24.2	16.0	30.0	20.8
	10	15.1	12.8	18.6	16.6	22.5	18.5	28.0	24.1
	20	14.0	14.2	17.2	18.5	20.9	20.7	25.9	27.0
	30	12.9	15.5	15.9	20.2	19.2	22.7	23.9	29.5

SST	SDT*	5H80		5H86		5H120		5H126	
		CAP.	BHP	CAP.	BHP	CAP.	BHP	CAP.	BHP
–90	–30	5.4	11.6	6.8	15.1	8.2	17.0	10.1	21.8
	–20	4.8	11.9	6.0	15.4	7.2	17.4	9.0	22.4
	–10	4.2	12.0	5.2	15.5	6.3	17.5	7.8	22.6
	0	3.6	11.8	4.4	15.4	5.3	17.3	6.6	22.3
	10	2.9	11.5	3.7	15.0	4.4	16.8	5.4	21.7
	20	2.3	11.0	2.9	14.3	3.5	16.0	4.3	20.6
	30	—	—	—	—	—	—	—	—
–80	–30	8.2	12.8	10.2	16.6	12.3	18.8	15.2	24.2
	–20	7.4	13.5	9.2	17.5	11.1	19.8	13.8	25.5
	–10	6.6	13.9	8.2	18.1	9.9	20.5	12.3	26.4
	0	5.8	14.1	7.2	18.4	8.7	20.8	10.8	26.8
	10	5.0	14.1	6.3	18.4	7.5	20.8	9.4	26.8
	20	4.3	13.9	5.3	18.1	6.4	20.4	7.9	26.3
	30	3.5	13.4	4.4	17.4	5.2	19.6	6.5	25.4
–70	–30	11.8	13.7	14.6	17.8	17.7	20.1	21.9	25.9
	–20	10.8	14.8	13.4	19.3	16.2	21.9	20.1	28.2
	–10	9.8	15.7	12.2	20.4	14.8	23.2	18.3	29.9
	0	8.9	16.4	11.0	21.3	13.3	24.2	16.5	31.3
	10	7.9	16.8	9.8	21.9	11.8	24.8	14.7	32.1
	20	6.9	17.0	8.6	22.1	10.3	25.1	12.8	32.4
	30	6.0	16.9	7.4	21.9	8.9	24.9	11.1	32.2
–60	–30	16.4	14.1	—	—	—	—	—	—
	–20	15.2	15.8	18.9	20.5	22.9	23.2	28.4	30.1
	–10	14.0	17.3	17.4	22.5	21.1	25.5	26.1	32.9
	0	12.8	18.5	15.9	24.0	19.2	27.4	23.9	35.3
	10	11.6	19.4	14.4	25.3	17.4	28.8	21.6	37.2
	20	10.4	20.1	12.9	26.1	15.6	29.8	19.4	38.5
	30	9.2	20.5	11.4	26.6	13.8	30.3	17.1	39.2
–50	–20	20.9	16.2	25.9	21.0	31.3	23.8	38.9	30.7
	–10	19.4	18.3	24.1	23.8	29.1	27.1	36.1	35.0
	0	17.9	20.2	22.2	26.3	26.9	29.9	33.3	38.6
	10	16.4	21.8	20.4	28.3	24.6	32.3	30.6	41.8
	20	14.9	23.1	18.5	30.0	22.4	34.2	27.8	44.3
	30	13.4	24.0	16.7	31.3	20.2	35.7	25.0	46.2
–40	–20	27.9	15.6	34.6	20.2	41.9	22.9	52.0	29.6
	–10	26.1	18.6	32.4	24.1	39.2	27.4	48.6	35.5
	0	24.3	21.3	30.2	27.6	36.5	31.5	45.3	40.7
	10	22.5	23.6	27.9	30.7	33.8	35.1	41.9	45.3
	20	20.7	25.7	25.6	33.4	31.0	38.1	38.5	49.3
	30	18.8	27.4	23.4	35.6	28.3	40.7	35.1	52.7
–30	–10	34.5	17.7	42.7	23.1	51.7	26.1	64.2	33.9
	0	32.3	21.4	40.0	27.8	48.4	31.6	60.1	40.9
	10	30.0	24.7	37.3	32.1	45.1	36.6	56.0	47.4
	20	27.8	27.6	34.5	35.9	41.8	41.0	51.8	53.1
	30	25.6	30.2	31.8	39.2	38.5	44.9	47.7	58.1

LEGEND

Bhp — Brake Horsepower
Cap. — Capacity (Tons)
SDT — Saturated Discharge Temperature (F)
SST — Saturated Suction Temperature (F)

*Also referred to as Saturated Intermediate Temperature.

Table 16 — Booster Compressor Starting Data

COMPR SIZE	UNLOADING DURING STARTING	MAX COMPR STARTING TORQUE (LB-FT)		RECOMMENDED MIN MOTOR SIZE HP		FRICTION HP* (FHP)
		R-22		R-22		
		Saturated Discharge Temperature (F)		High Torque	Normal Torque	
		10 F	30 F			
5F20	None	15	21	3	3	.67
5F30	None	16	24	5	5	.91
5F40	75%	13	19	5	5	1.15
5F60	66 2/3%	16	24	5	7 1/2	1.64
5H40	75%	30	45	7 1/2	10	2.25
5H46	75%	38	56	10	15	2.25
5H60	66 2/3%	37	54	10	15	3.07
5H66	66 2/3%	46	68	15	20	3.07
5H80	75%	41	60	20	20	3.82
5H86	75%	51	75	20	30	3.82
5H120	66 2/3%	65	94	20	30	5.25
5H126	66 2/3%	81	118	30	40	5.25

*Based on 1750 rpm with 5F,H compressors. Will vary directly with rpm at other speeds.

5F and 5H Compressor Drawings — See Fig. 13-20 for drawings of the 5F and 5H compressors. Dimensions are shown in inches [mm].

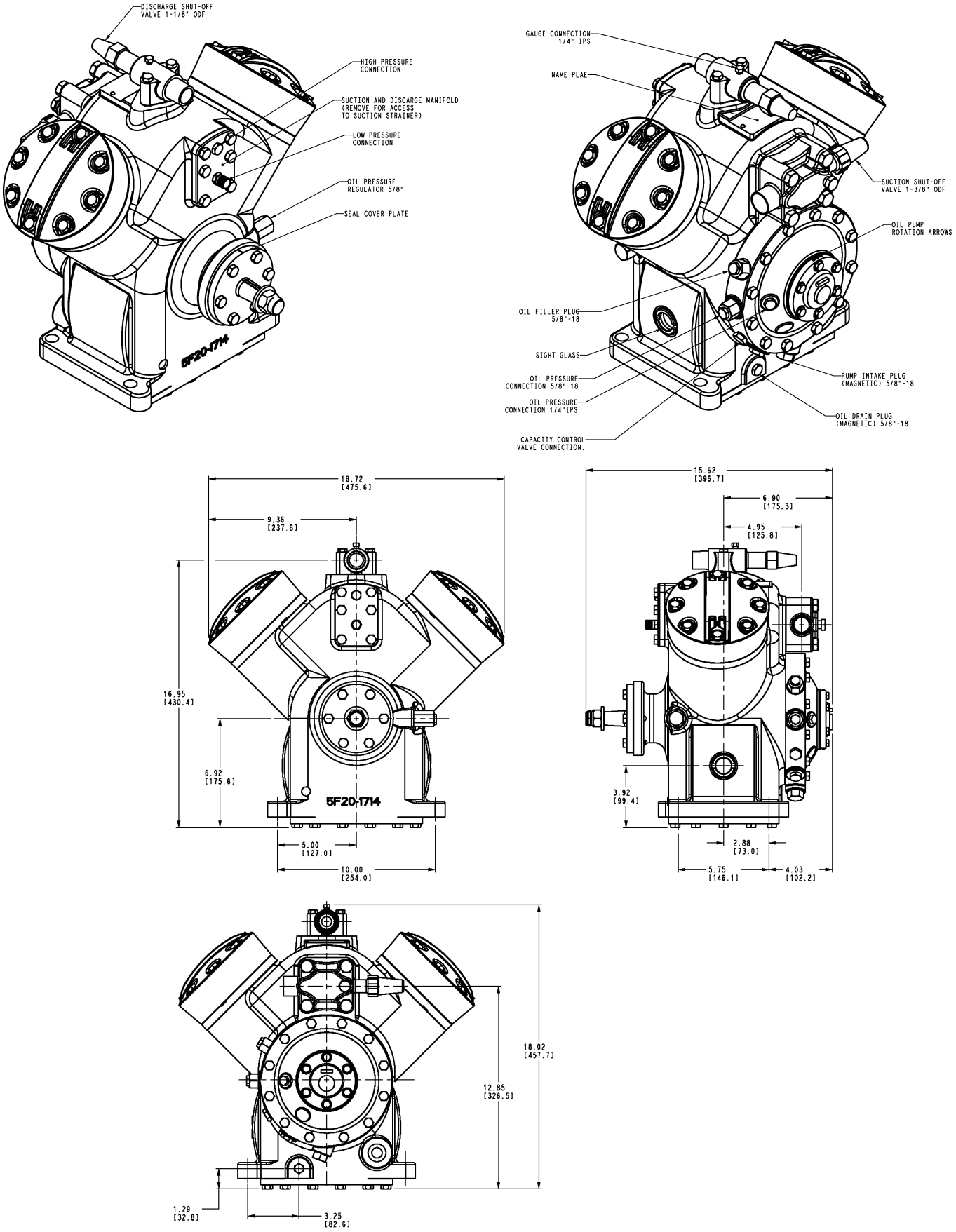

Fig. 13 — 5F20 Model

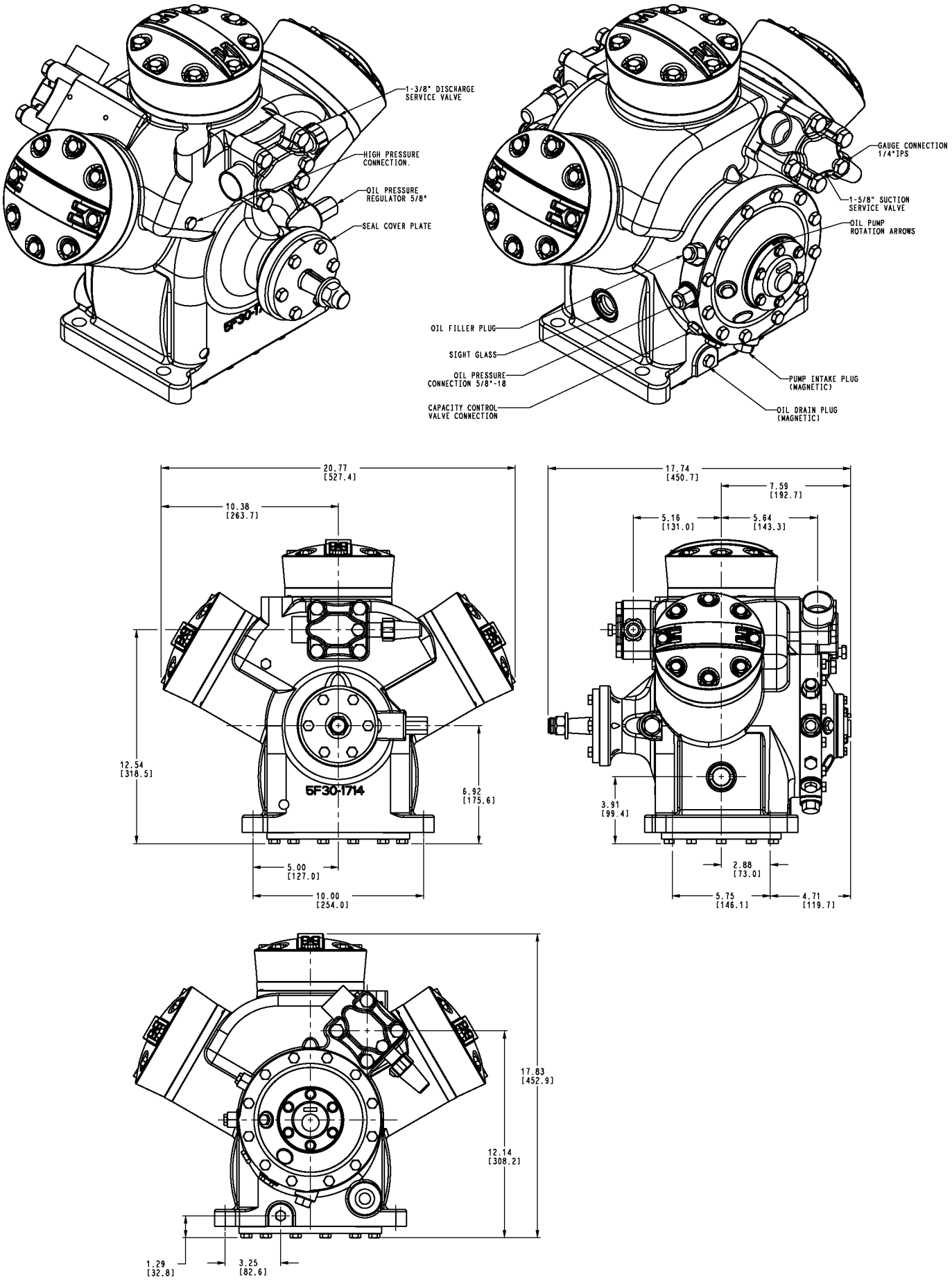

Fig. 14 — 5F30 Model

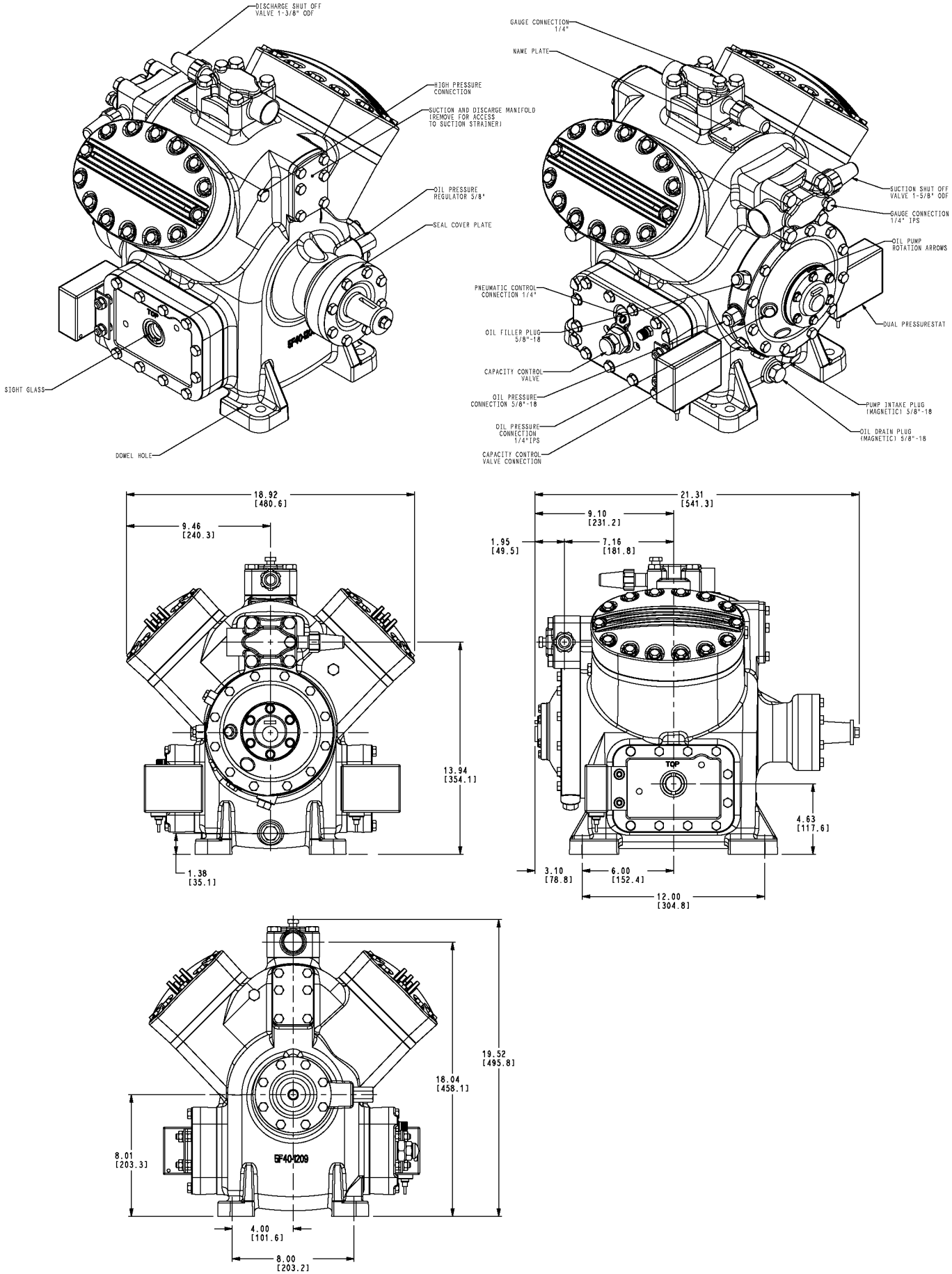

Fig. 15 — 5F40 Model

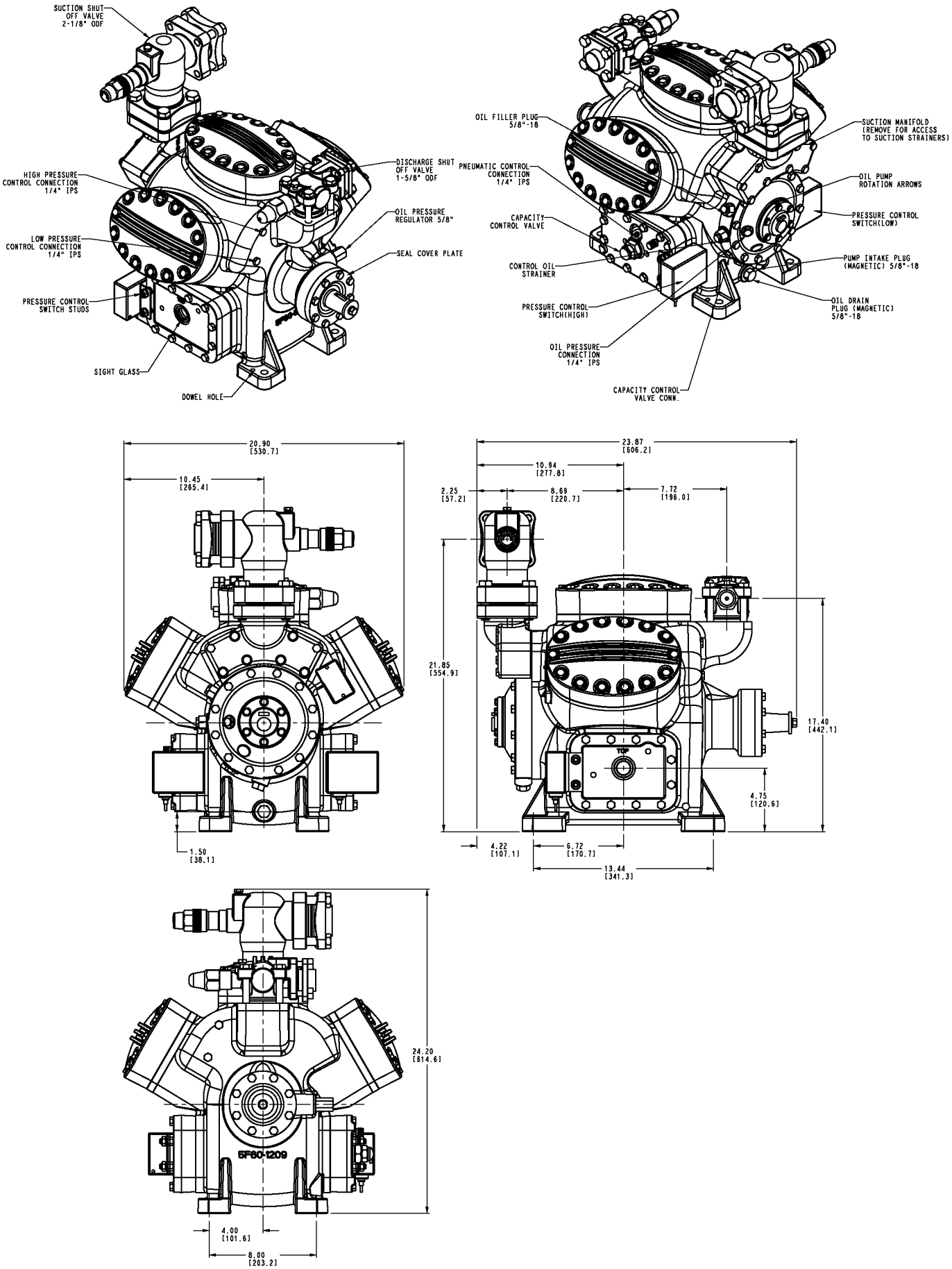

Fig. 16 — 5F60 Model

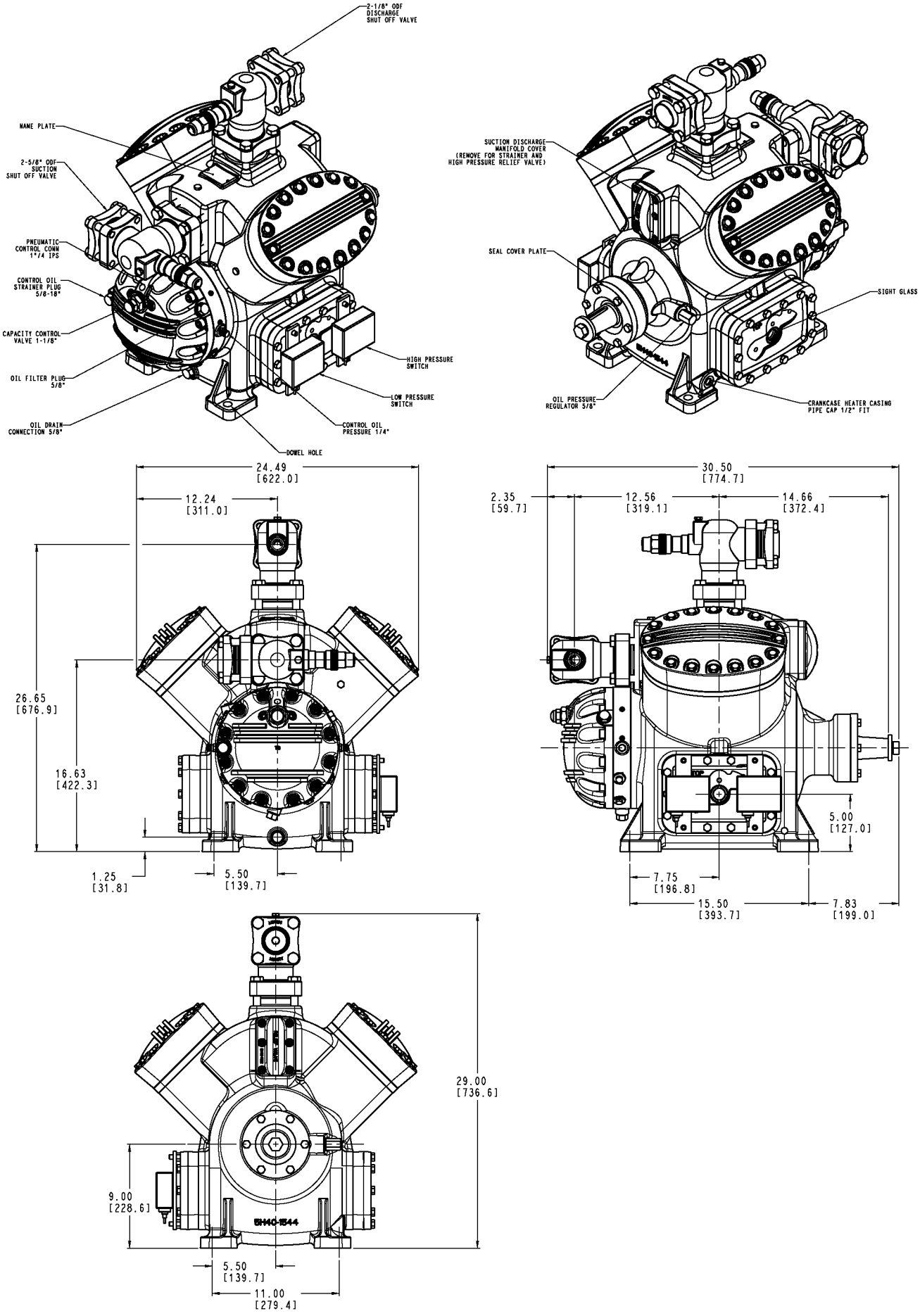

Fig. 17 — 5H40 Model

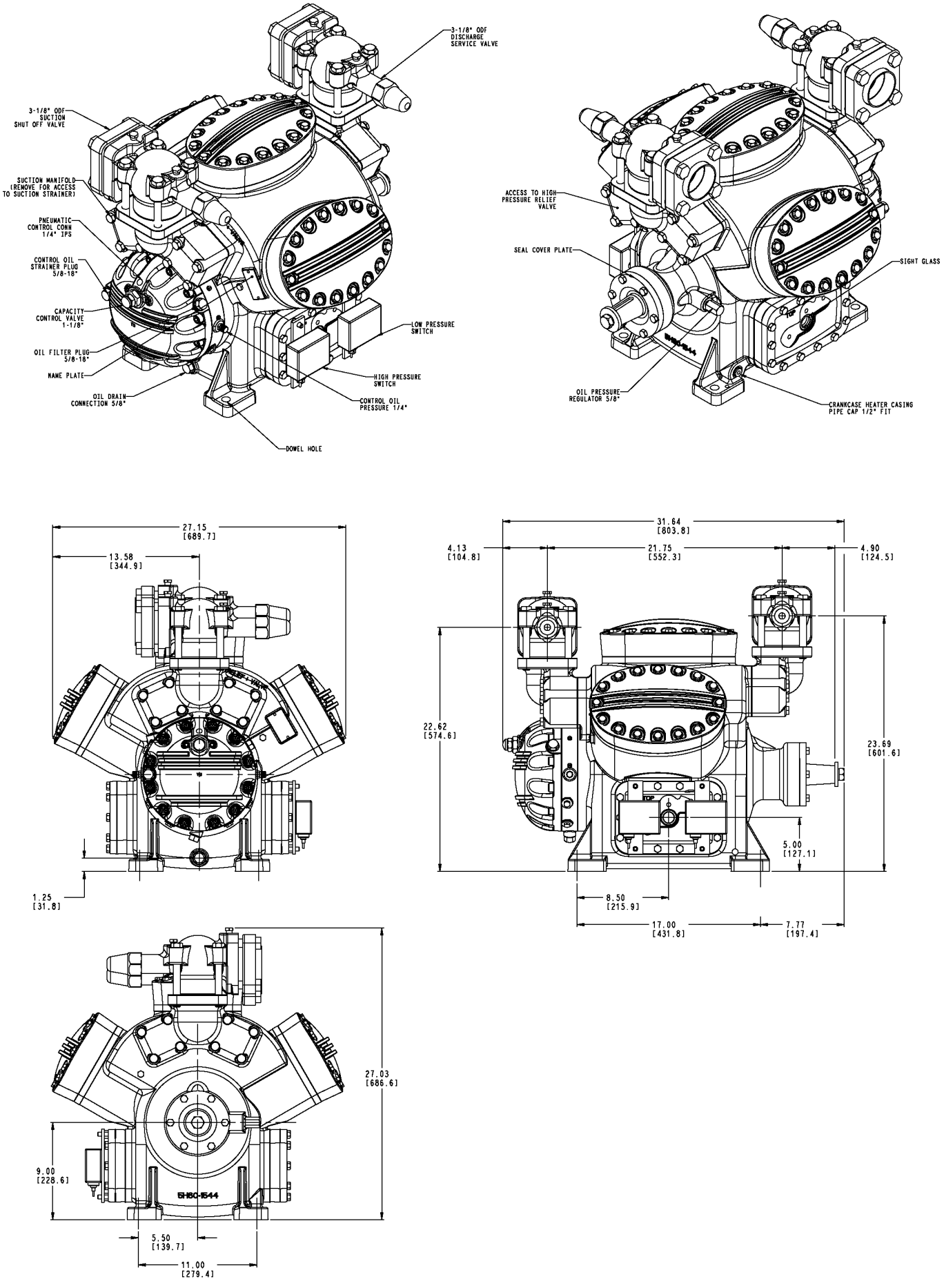

Fig. 18 — 5H60 Model

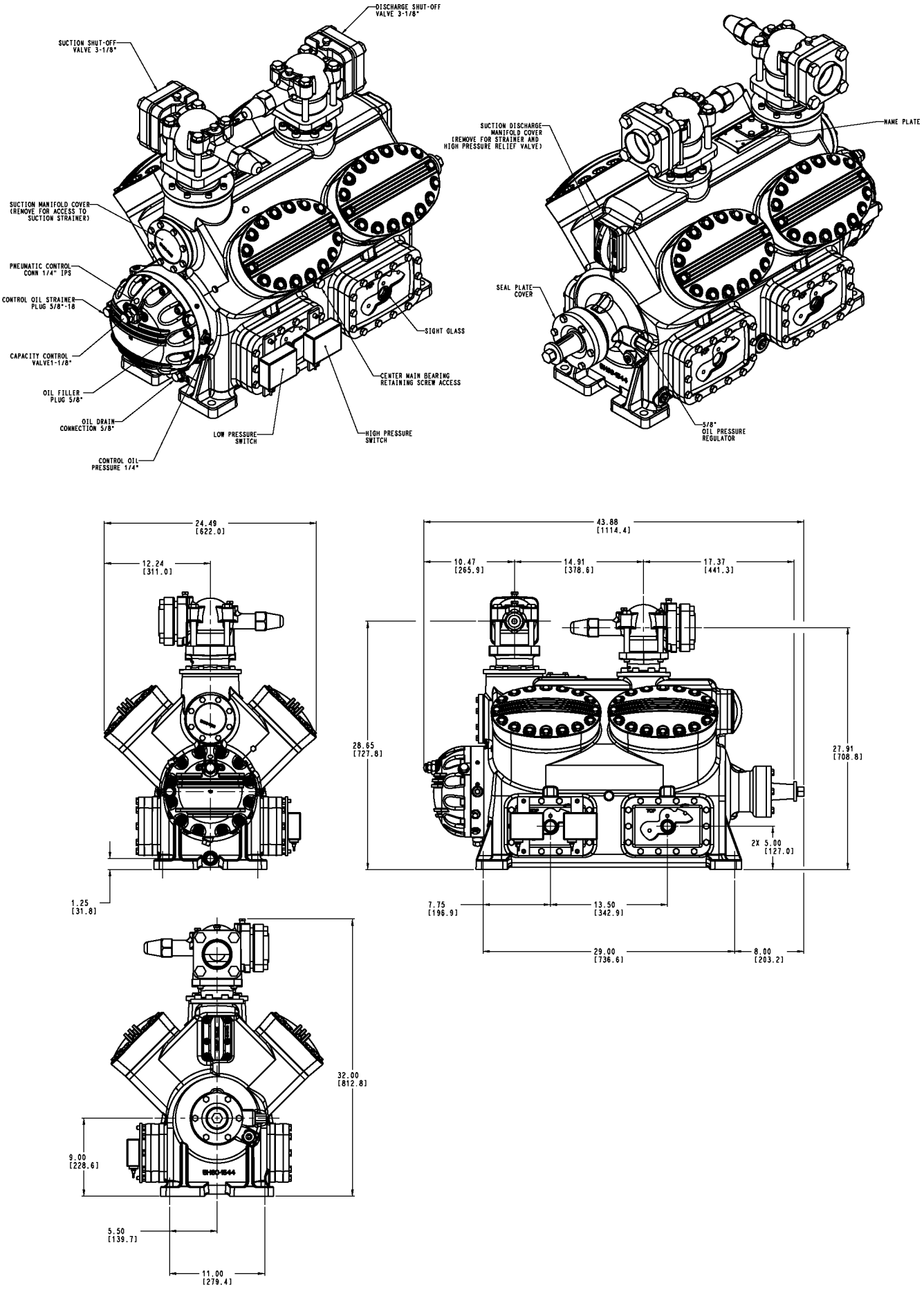

Fig. 19 — 5H80 Model

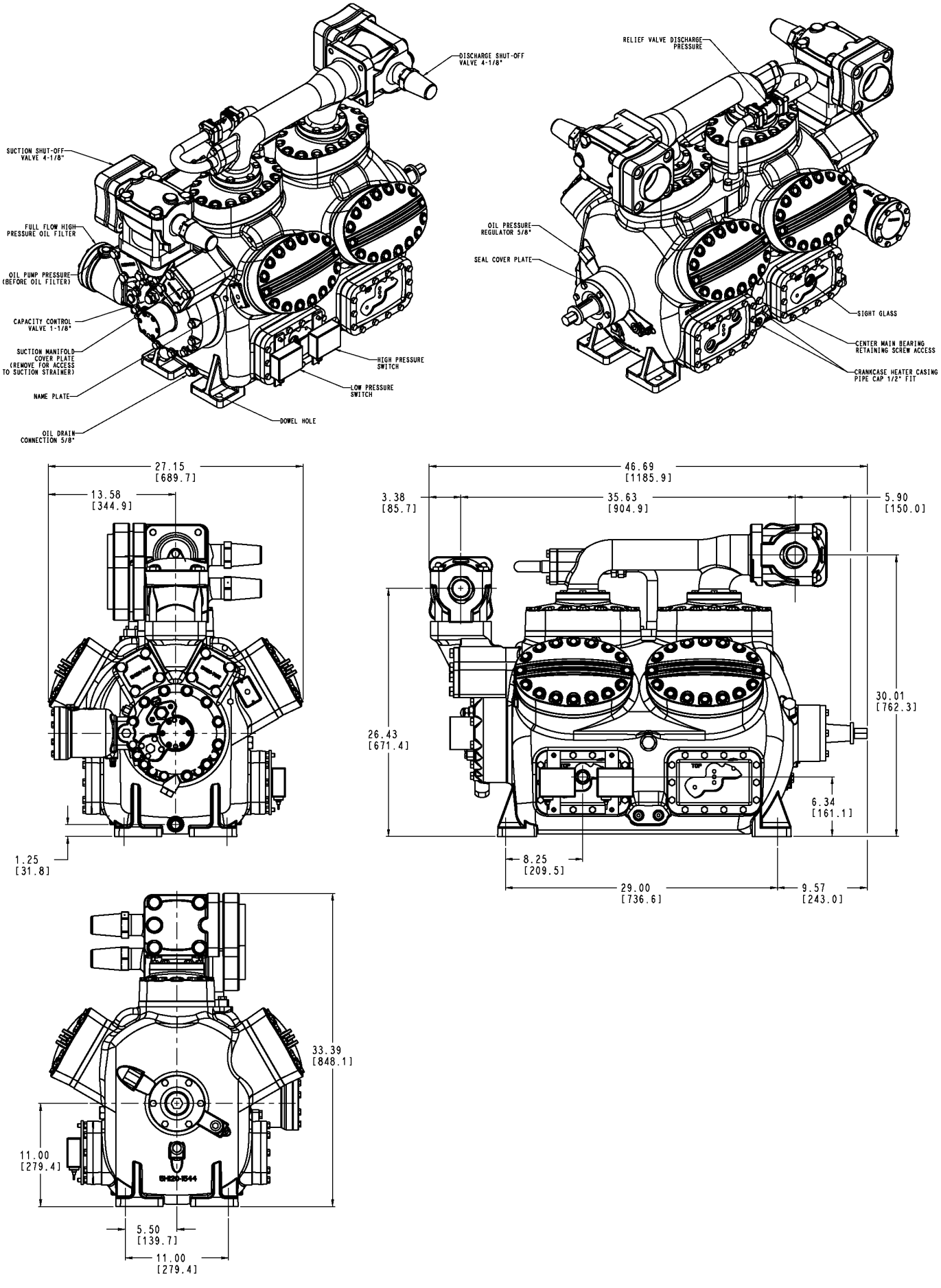

Fig. 20 — 5H120 Model

AMMONIA COMPRESSORS

Ammonia Compressor Models — Ammonia compressor models are shown in Table 17.

SAFETY RELIEF VALVES — All 5H compressors are equipped with built-in safety relief valves that are factory set to relieve from discharge to suction side of the compressor at a pressure differential of 350 psi.

Brake Horsepower — Power input to the compressor is given in brake horsepower. These values are compressor brake horsepower and do not include any losses incurred by the use of a belt drive. Approximately 3% should be added to account for drive belt losses.

Liquid Subcooling — Subcooling the liquid below the condensing temperature by an external means results in improved system performance. If the supply water temperature is low enough, subcooling may be accomplished in a water to ammonia heat exchanger with the same water used to cool the heads. Subcooling can also be accomplished in the subcooling coil of an evaporative condenser.

Compressor Operating Limits — Operation of ammonia compressors within the limits indicated in the published rating tables will result in trouble-free operation providing the following recommendations and limitations are applied. For physical data see Table 18; for ratings information see the rating tables on pages 31-33 and the figures on page 34.

Discharge Temperature — The discharge temperature as measured just after the compressor stop valve must never exceed 275°F.

Compression Ratio — The compression ratio in an ammonia compressor should not exceed 8. On light loading, the compressor must be prevented from pulling down to a low suction pressure which could result in a compression ratio appreciably higher than 8. A compression ratio greater than 8 can result in excessive discharge temperatures and compressor failure.

Suction Gas Superheat — With ammonia compressors, the suction gas temperature should be as close to saturation as possible, without actual liquid. At high compression ratios, excessive suction gas superheat will result in high discharge temperatures and compressor failure. In practice, the suction gas usually enters the compressor in a slightly superheated condition because of heat gain in the suction line and superheat necessary for satisfactory expansion valve operation. To keep the suction gas temperature rise to a minimum, liquid-suction heat exchangers are never used and the suction line is usually insulated. With ammonia, the suction gas superheat must be kept to a minimum to prevent excessive discharge temperatures.

Table 17 — 5H Ammonia Compressor Models

5H AMMONIA COMPRESSOR MODELS									
5H41	5H61	5H81	MODEL NOMENCLATURE	CAPACITY CONTROL	UNLOADER ELEMENTS INSTALLED	SERVICE VALVES	WATER-COOLED HEADS	OPSS	HI/LOW PRESSURE SWITCHES
X	X	X	- C835	Electric Unloading	Yes	Yes	No	Yes	No
X	X	X	- C875			Yes	Yes		
X	X	X	- C915	Low Torque Start (No Unloading)		Yes	No		
X	X	X	- C925			Yes	Yes		
X	X	X	- C935	(VFD) No Unloading	No	Yes	No		
X	X	X	- C945			Yes	Yes		

Example: 5H61-C875 model number is a compressor configured with Electric Unloading, Service Valves, Water Cooled Heads, and OPSS oil safety sensor.

VFD compressor models will start fully loaded. VFD range is 30 Hz to 60 Hz.

Table 18 — Physical Data

COMPRESSOR MODEL	AMMONIA	5H41	5H61	5H81
Nominal HP	—	25	40	50
Number of Cylinders	—	4	6	8
Unloading Cylinders	Standard	2	4	5
Suction Service valve	Standard	2 1/8"	2 1/8"	2 5/8"
Discharge Service Valve	Standard	1 5/8"	2 1/8"	2 1/8"
Oil Pressure Safety	Standard	Yes		
Maximum Speed (rpm)	Single High Stage	1275	1275	1275
	Low Stage Booster	1600	1600	1600
Displacement at 1275 rpm	CFM	67	101	135
Displacement at 1600 rpm		85	127	169
Minimum Speed (rpm)	For Unloading	800	900	900
	For Lubrication	400	400	400
Recommend Net Oil DP Pressure	psid	45	45	45
Recommend Oil Type CAMCO 717-HT	Pint	20	24	45
Weight (water cooled heads)	lbs	715	965	1340

Head Pressure — Non-condensables such as air must be kept purged from the system and the quantity and/or temperature of the air or water through the condenser set so that the designed condensing pressure will be maintained.

Discharge Pressure — The discharge pressure should not exceed 235 psig which corresponds to a saturated condensing temperature of approximately 100°F. Higher saturated discharge temperatures may result in oil breakdown, inadequate lubrication and excessive discharge temperature.

Compressor Design Characteristics and Accessories

OIL COOLER — The 5H ammonia compressors can be equipped with an external, water-cooled, oil cooler. This oil cooler is piped in series with the water-cooled cylinder heads and receives the water flow first.

Cooling of the oil improves the compressor operating efficiency as well as the quality of the oil. The oil temperature will be maintained within the safe limits of 100°F to 120°F when the water quantity and discharge temperature from the heads are as indicated in Table 19.

Table 19 — Water Flow Through Heads and Oil Cooler (gpm) Based on 30°F Rise

COMPRESSION RATIO	5H41	5H61	5H81
2	0.7	1.0	1.4
3	0.9	1.3	1.8
4	1.0	1.5	2.0
6	1.1	1.7	2.2
8	1.1	1.7	2.2

WATER-COOLED HEADS — Some 5H ammonia compressor models are equipped with water-cooled heads. The valve plate is effectively cooled by water flow around the side and top of the heads.

The amount of water required for oil cooler and compressor heads is indicated in Table 19. The temperature of cooling water leaving the heads should be between 100°F and 120°F with 120°F being the maximum permissible temperature.

OIL SAFETY SWITCH — An oil safety sensor is standard equipment on all 5H ammonia compressors. This factory-installed sensor must be properly installed and checked for proper operation. This is particularly important because oil tends to collect in the evaporator due to the immiscibility of ammonia and oil.

SAFETY RELIEF VALVES — All 5H ammonia compressors are equipped with safety relief valves to relieve from the discharge to the suction side of the compressor at a pressure differential of 300 psi.

HIGH PRESSURE SWITCH — A pressure switch should be installed and set to cut out at a maximum pressure of 240 psi. As a safety control, this pressurestat should be a manual reset type.

COMPRESSOR LUBRICATION — Ammonia and oil are practically immiscible, and therefore, very little oil is in circulation in the system. When excess oil is circulated in an ammonia system, this oil will collect in the evaporator(s), resulting in compressor failure from lack of oil.

Therefore, it is essential that the oil level in the crankcase be checked at frequent intervals and oil added when required. The operating oil level in the crankcase of these compressors should be between the bottom of the bull's eye and halfway up the bull's eye. All 5H compressors have the force feed type of lubrication; thus, to ensure proper lubrication, the operating speed should never be less than 400 rpm.

COMPRESSOR CAPACITY CONTROL — The 5H ammonia compressor models can be configured with electric unloading or no unloading for variable frequency drive (VFD) operation.

Electric Capacity Control — When operating with capacity control, three-way solenoid valve(s) are supplied on the compressor and are connected as shown in Fig. 21. These valves either supply oil pump pressure to the unloader power cylinder or bleed these elements to crankcase pressure.

During normal operation, when full capacity is required, the appropriate three-way solenoid valves are energized. At this time, the passage from the oil pump to the unloader power elements is open, thus providing oil pressure to the power elements and permitting normal operation of the suction valves.

When capacity reduction is required, the appropriate three-way solenoid valve is de-energized. The oil pump pressure connection is then closed and the oil pressure line from the unloader power elements is open to the crankcase. This relieves the oil pressure from the power elements; thus, they position themselves to hold the suction valves open and unload those particular cylinders.

Based on the compressor model, up to four electrical unloading solenoid valves may be installed on the compressor's bearing head. The unloader valves are normally closed valves and will allow the compressor to start to fully unload upon a compressor start. Therefore the unloader solenoid coil must be energized to load the compressor and sequenced per Fig. 21 and 22 for proper capacity control.

The 5H ammonia compressor will still utilize the standard power element, unloader sleeve, cylinder sleeve, and lifting fork. But the pressure activated capacity control hardware has been replaced with electrically activated solenoid controls, mounted to the oil pump bearing head and energized via solenoid coils (see Fig. 23 and 24).

VFD Capacity Control — The 5H ammonia compressor is approved for VFD operation. The compressor can be configured with no unloading, which means all cylinders will start and operate LOADED only. The compressor's permissible VFD operating range is from 400-1450 RPM for high stage and 400-1600 RPM for low stage.

R Factor — In a staged compression system, the high stage compressor must have sufficient capacity to handle both the low stage, or booster compressor load, and the heat added to the refrigerant by the low stage compressor.

For THR factors for high stage heat rejection, see Table 20. To determine the required capacity of a high stage compressor, multiple the low stage capacity by the "R" Factor corresponding to the saturated discharge temperature. If any additional loads are to be handled by the high stage compressor at its operating suction temperature level, these loads must be added to arrive at the total tonnage capacity of the high stage compressor.

Compressor Operating Limits — Operation of ammonia compressors within the limits indicated in the published rating tables will result in trouble-free operation providing the following recommendations and limitations are applied. For physical data see Table 18; for ratings information see Tables 21-23 and Fig. 25 and 26.

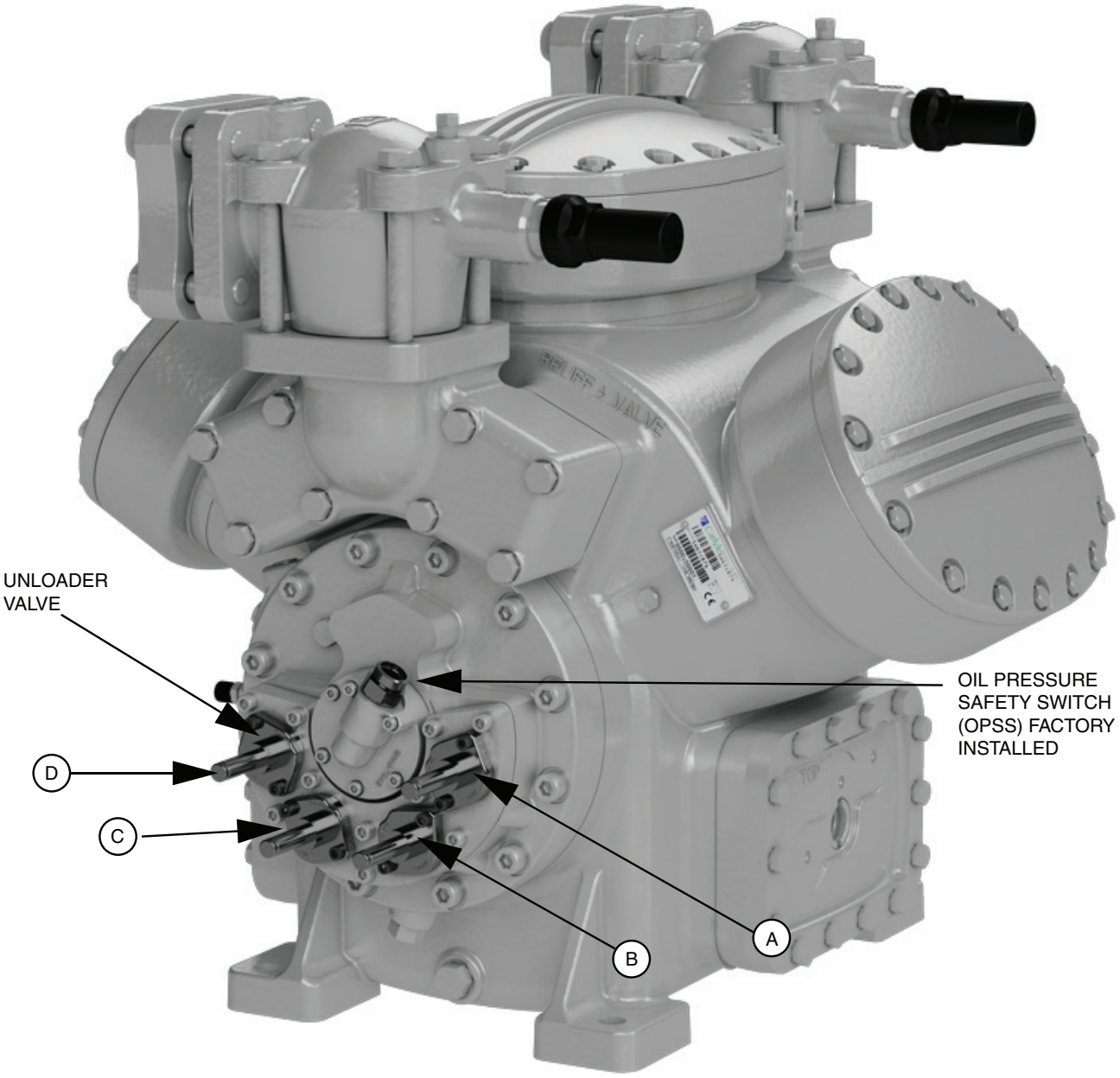

CAPACITY CONTROL STEPS - AMMONIA					
MODEL	**UNLOADING CYLINDERS**	**CAPACITY (% of full load)**	**UNLOADER VALVE DESIGNATION**	**UNLOADING STEP**	**CYLINDER NO.**
5H41	2 of 4 (2 steps)	75	A	1	1
		50	D	2	2
5H61	4 of 6 (4 steps)	83	A	1	1
		67	B	2	2
		50	D	3	3
		33	C	4	4
5H81	5 of 8 (3 steps)	87	A	1	1
		63	B	2	2, 2
		38	D	3	3, 3

Fig. 21 — Unloader Valve/Cylinder Designation

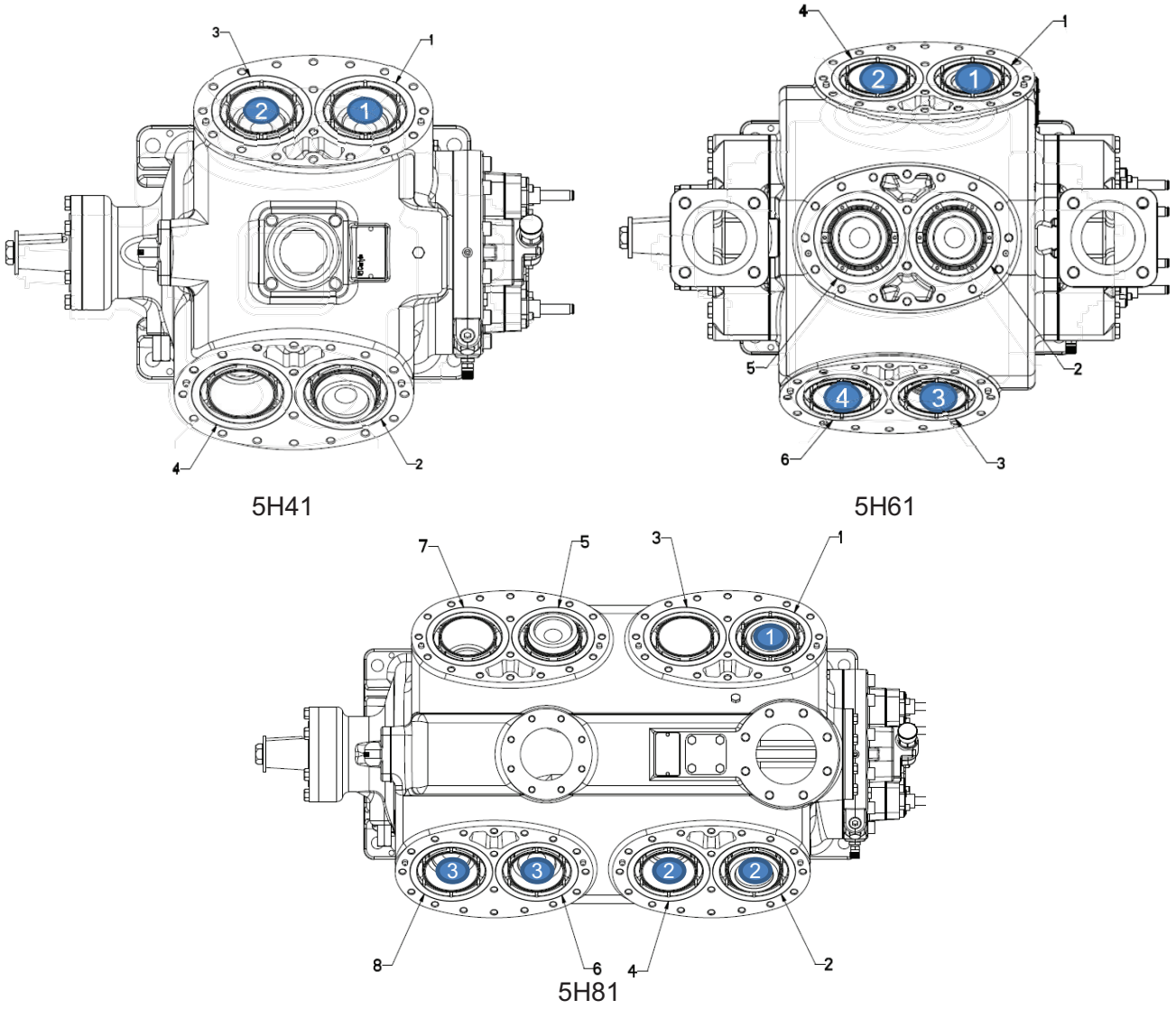

Fig. 22 — Cylinder Unloading Sequence

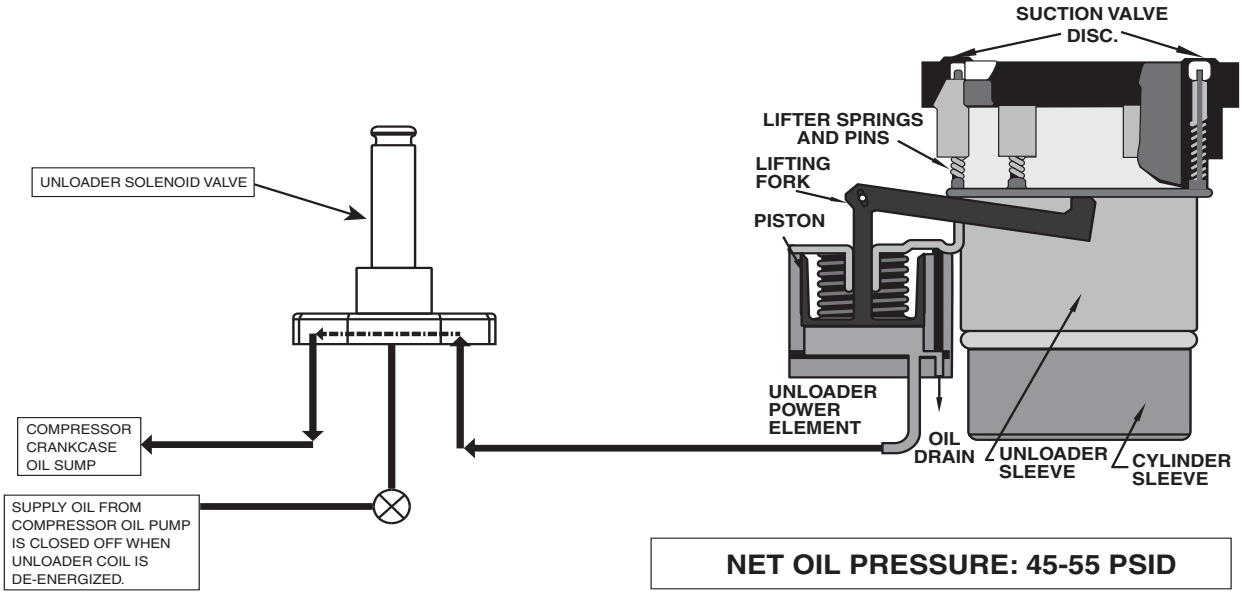

DE-ENERGIZING THE UNLOADER SOLENOID COIL WILL UNLOAD THE COMPRESSOR. THE 3-WAY UNLOADING VALVE WILL DIVERT OIL FROM THE POWER ELEMENT, DRAINING THE OIL BACK TO THE COMPRESSOR CRANKCASE, CAUSING THE CYLINDER TO UNLOAD.

Fig. 23 — Compressor Unloaded

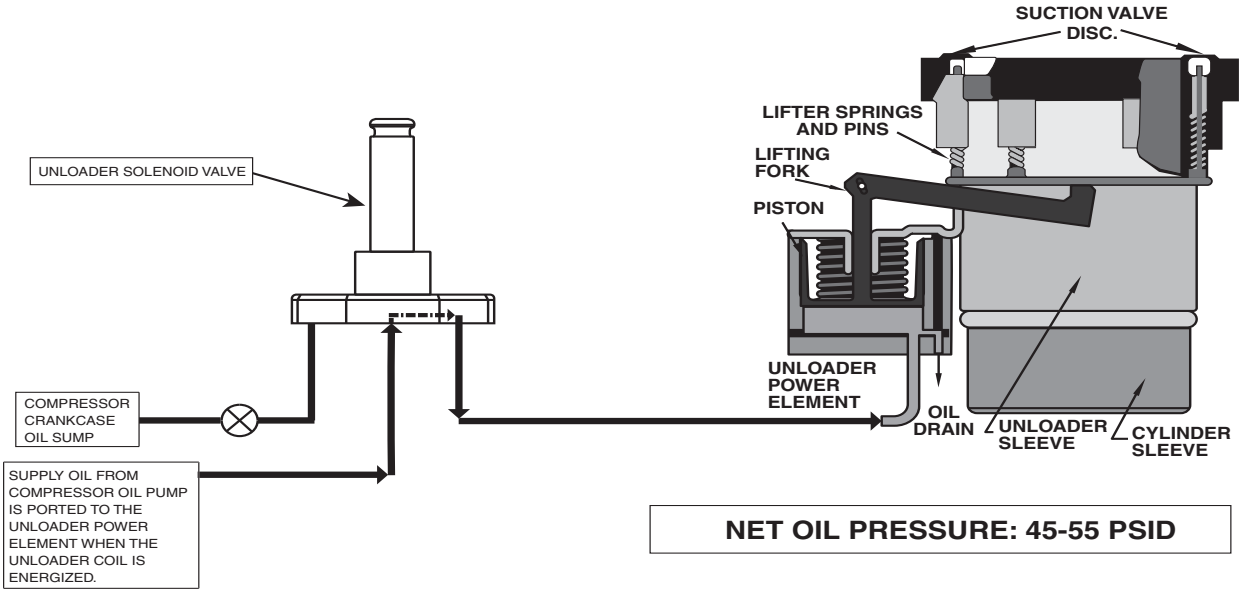

ENERGIZING THE UNLOADER SOLENOID COIL WILL LOAD THE COMPRESSOR. THE 3-WAY UNLOADING VALVE WILL DIVERT OIL FROM THE OIL PUMP TO THE UNLOADER POWER ELEMENT, CAUSING THE CYLINDER TO LOAD.

Fig. 24 — Compressor Loaded

Table 20 — THR Factors - High Stage Heat Rejection

MULTIPLY THE CAPACITY BY THE THR FACTOR TO DETERMINE CONDENSER HEAT REJECTION (BTU/HR)								
High Stage Heat Rejection Factors For Ammonia								
SDT (F)	SST (F)							
	-30	-20	-10	0	10	20	30	40
70	1.166	1.16	1.152	1.149	1.141	1.118	1.095	1.073
75	1.188	1.18	1.170	1.161	1.151	1.128	1.104	1.080
80	—	1.20	1.190	1.180	1.165	1.140	1.115	1.090
85	—	1.22	1.208	1.198	1.178	1.150	1.125	1.098
90	—	—	1.250	1.214	1.190	1.164	1.138	1.106
95	—	—	—	1.233	1.206	1.178	1.150	1.118
100	—	—	—	1.253	1.224	1.194	1.165	1.130

Table 21 — 5H41, R-717 — High Stage Rating at 1200 RPM

SDT (F)	5H41, R-717 HIGH STAGE RATING AT 1200 RPM		SST (F)														
			-30	-25	-20	-15	-10	-5	0	5	10	15	20	25	30	35	40
70	Power	BHP	9.2	10.6	11.8	12.8	13.6	14.3	15.0	15.5	15.9	16.1	16.1	16.0	15.6	15.0	14.1
	Capacity	BTU/HR	41,872	57,315	73,888	91,039	109,166	129,355	151,992	177,148	204,779	234,822	267,241	302,053	339,234	378,913	421,146
	EER	BTU/W-HR	5.70	6.77	7.82	8.88	10.01	11.26	12.67	14.26	16.08	18.18	20.65	23.59	27.16	31.59	37.22
	RGT	F	-20	-15	-10	-5	0	5	10	15	20	25	30	35	40	45	50
	Mass Flow	LB/HR	86.2	117.5	151.0	185.3	221.4	261.5	306.2	355.7	409.8	468.5	531.6	599.1	671.0	747.4	828.6
	Suct P	PSIA	13.9	16.0	18.3	20.9	23.7	26.9	30.4	34.3	38.5	43.1	48.2	53.7	59.7	66.3	73.3
	Disch P	PSIA	128.9	128.9	128.9	128.9	128.9	128.9	128.9	128.9	128.9	128.9	128.9	128.9	128.9	128.9	128.9
	Pressure Ratio		9.3	8.1	7.0	6.2	5.4	4.8	4.2	3.8	3.3	3.0	2.7	2.4	2.2	1.9	1.8
80	Power	BHP			11.7	13.2	14.4	15.3	16.2	16.9	17.6	18.1	18.4	18.6	18.5	18.2	17.7
	Capacity	BTU/HR			63,506	81,645	100,668	120,257	141,752	165,764	192,471	221,865	253,889	288,504	325,628	365,326	407,605
	EER	BTU/W-HR			6.75	7.72	8.72	9.77	10.91	12.19	13.64	15.28	17.16	19.35	21.92	25.00	28.75
	RGT	F			-10	-5	0	5	10	15	20	25	30	35	40	45	50
	Mass Flow	LB/HR			132.9	170.2	209.0	248.8	292.3	340.6	394.2	453.0	516.8	585.5	659.0	737.3	820.4
	Suct P	PSIA			18.3	20.9	23.7	26.9	30.4	34.3	38.5	43.1	48.2	53.7	59.7	66.3	73.3
	Disch P	PSIA			153.1	153.1	153.1	153.1	153.1	153.1	153.1	153.1	153.1	153.1	153.1	153.1	153.1
	Pressure Ratio				8.4	7.3	6.5	5.7	5.0	4.5	4.0	3.6	3.2	2.9	2.6	2.3	2.1
90	Power	BHP					14.8	16.3	17.4	18.4	19.2	20.0	20.6	21.1	21.4	21.4	21.2
	Capacity	BTU/HR					90,519	111,484	132,733	155,600	180,984	209,206	240,324	274,304	311,031	350,503	392,669
	EER	BTU/W-HR					7.61	8.54	9.51	10.56	11.73	13.04	14.52	16.21	18.15	20.42	23.09
	RGT	F					0	5	10	15	20	25	30	35	40	45	50
	Mass Flow	LB/HR					192.6	236.3	280.4	327.5	379.7	437.5	501.0	570.1	644.5	724.2	809.2
	Suct P	PSIA					23.7	26.9	30.4	34.3	38.5	43.1	48.2	53.7	59.7	66.3	73.3
	Disch P	PSIA					180.8	180.8	180.8	180.8	180.8	180.8	180.8	180.8	180.8	180.8	180.8
	Pressure Ratio						7.6	6.7	5.9	5.3	4.7	4.2	3.8	3.4	3.0	2.7	2.5
100	Power	BHP							18.5	19.8	20.9	21.9	22.8	23.5	24.1	24.5	24.6
	Capacity	BTU/HR							123,648	146,809	171,144	197,910	227,617	260,417	296,247	335,082	376,819
	EER	BTU/W-HR							8.35	9.24	10.21	11.27	12.46	13.81	15.32	17.06	19.06
	RGT	F							10	15	20	25	30	35	40	45	50
	Mass Flow	LB/HR							267.8	316.8	368.1	424.2	486.3	554.6	629.1	709.5	795.7
	Suct P	PSIA							30.4	34.3	38.5	43.1	48.2	53.7	59.7	66.3	73.3
	Disch P	PSIA							212.0	212.0	212.0	212.0	212.0	212.0	212.0	212.0	212.0
	Pressure Ratio								7.0	6.2	5.5	4.9	4.4	3.9	3.5	3.2	0.0

LEGEND

— Water-cooled heads required
— N/A

Table 22 — 5H61, R-717 — High Stage Rating at 1200 RPM

SDT (F)	5H61, R-717 HIGH STAGE RATING AT 1200 RPM		SST (F)														
			-30	-25	-20	-15	-10	-5	0	5	10	15	20	25	30	35	40
70	Power	BHP	13.5	15.6	17.4	18.9	20.1	21.2	22.2	23.0	23.6	23.9	24.0	23.7	23.1	22.2	20.9
	Capacity	BTU/HR	62,811	85,976	110,835	136,563	163,754	194,038	227,994	265,729	307,176	352,241	400,872	453,090	508,863	568,383	631,734
	EER	BTU/W-HR	5.81	6.88	7.94	9.00	10.14	11.39	12.80	14.39	16.22	18.35	20.84	23.82	27.45	31.97	37.77
	RGT	F	-20	-15	-10	-5	0	5	10	15	20	25	30	35	40	45	50
	Mass Flow	LB/HR	129.3	176.3	226.5	278.0	332.1	392.2	459.3	533.5	614.8	702.8	797.4	898.7	1006.5	1121.2	1243.0
	Suct P	PSIA	13.9	16.0	18.3	20.9	23.7	26.9	30.4	34.3	38.5	43.1	48.2	53.7	59.7	66.3	73.3
	Disch P	PSIA	128.9	128.9	128.9	128.9	128.9	128.9	128.9	128.9	128.9	128.9	128.9	128.9	128.9	128.9	128.9
	Pressure Ratio		9.3	8.1	7.0	6.2	5.4	4.8	4.2	3.8	3.3	3.0	2.7	2.4	2.2	1.9	1.8
80	Power	BHP			17.3	19.5	21.3	22.8	24.0	25.2	26.2	26.9	27.5	27.7	27.6	27.1	26.3
	Capacity	BTU/HR			95,263	122,472	151,007	180,390	212,633	248,653	288,714	332,806	380,844	432,767	488,455	548,003	611,423
	EER	BTU/W-HR			6.85	7.83	8.83	9.88	11.03	12.31	13.76	15.40	17.30	19.50	22.10	25.22	29.03
	RGT	F			-10	-5	0	5	10	15	20	25	30	35	40	45	50
	Mass Flow	LB/HR			199.3	255.3	313.6	373.2	438.4	511.0	591.4	679.5	775.2	878.3	988.5	1105.9	1230.7
	Suct P	PSIA			18.3	20.9	23.7	26.9	30.4	34.3	38.5	43.1	48.2	53.7	59.7	66.3	73.3
	Disch P	PSIA			153.1	153.1	153.1	153.1	153.1	153.1	153.1	153.1	153.1	153.1	153.1	153.1	153.1
	Pressure Ratio				8.4	7.3	6.5	5.7	5.0	4.5	4.0	3.6	3.2	2.9	2.6	2.3	2.1
90	Power	BHP					21.9	24.1	25.8	27.3	28.6	29.8	30.7	31.4	31.8	31.9	31.6
	Capacity	BTU/HR					135,783	167,231	199,106	233,407	271,484	313,818	360,495	411,467	466,558	525,768	589,018
	EER	BTU/W-HR					7.72	8.65	9.61	10.66	11.83	13.14	14.63	16.32	18.28	20.56	23.26
	RGT	F					0	5	10	15	20	25	30	35	40	45	50
	Mass Flow	LB/HR					288.9	354.5	420.6	491.3	569.5	656.2	751.4	855.1	966.8	1086.4	1213.8
	Suct P	PSIA					23.7	26.9	30.4	34.3	38.5	43.1	48.2	53.7	59.7	66.3	73.3
	Disch P	PSIA					180.8	180.8	180.8	180.8	180.8	180.8	180.8	180.8	180.8	180.8	180.8
	Pressure Ratio						7.6	6.7	5.9	5.3	4.7	4.2	3.8	3.4	3.0	2.7	2.5
100	Power	BHP							27.4	29.4	31.1	32.6	33.9	35.0	35.9	36.5	36.7
	Capacity	BTU/HR							185,477	220,220	256,724	296,874	341,434	390,636	444,382	502,635	565,243
	EER	BTU/W-HR							8.44	9.34	10.30	11.37	12.56	13.90	15.42	17.16	19.17
	RGT	F							10	15	20	25	30	35	40	45	50
	Mass Flow	LB/HR							401.7	475.2	552.1	636.3	729.5	832.0	943.6	1064.3	1193.5
	Suct P	PSIA							30.4	34.3	38.5	43.1	48.2	53.7	59.7	66.3	73.3
	Disch P	PSIA							212.0	212.0	212.0	212.0	212.0	212.0	212.0	212.0	212.0
	Pressure Ratio								7.0	6.2	5.5	4.9	4.4	3.9	3.5	3.2	2.9

LEGEND

— Water-cooled heads required
— N/A

Table 23 — 5H81, R-717 — High Stage Rating at 1200 RPM

SDT (F)	5H81, R-717 HIGH STAGE RATING AT 1200 RPM		SST (F)														
			-30	-25	-20	-15	-10	-5	0	5	10	15	20	25	30	35	40
70	Power	BHP	17.9	20.6	23.1	25.0	26.7	28.1	29.4	30.5	31.3	31.7	31.8	31.4	30.6	29.4	27.6
	Capacity	BTU/HR	83,744	114,630	147,775	182,078	218,331	258,710	303,983	354,295	409,557	469,643	534,483	604,105	678,467	757,825	842,291
	EER	BTU/W-HR	5.85	6.93	7.99	9.06	10.20	11.46	12.88	14.49	16.33	18.47	20.98	23.98	27.63	32.18	38.02
	RGT	F	-20	-15	-10	-5	0	5	10	15	20	25	30	35	40	45	50
	Mass Flow	LB/HR	172.4	235.1	301.9	370.6	442.9	523.0	612.4	711.3	819.7	937.0	1063.2	1198.2	1341.9	1494.9	1657.2
	Suct P	PSIA	13.9	16.0	18.3	20.9	23.7	26.9	30.4	34.3	38.5	43.1	48.2	53.7	59.7	66.3	73.3
	Disch P	PSIA	128.9	128.9	128.9	128.9	128.9	128.9	128.9	128.9	128.9	128.9	128.9	128.9	128.9	128.9	128.9
	Pressure Ratio		9.3	8.1	7.0	6.2	5.4	4.8	4.2	3.8	3.3	3.0	2.7	2.4	2.2	1.9	1.8
80	Power	BHP			22.9	25.8	28.2	30.2	31.8	33.4	34.7	35.7	36.4	36.6	36.5	35.9	34.8
	Capacity	BTU/HR			127,012	163,290	201,336	240,513	283,503	331,529	384,941	443,730	507,779	577,007	651,256	730,653	815,210
	EER	BTU/W-HR			6.90	7.89	8.89	9.94	11.10	12.39	13.85	15.50	17.41	19.63	22.25	25.39	29.22
	RGT	F			-10	-5	0	5	10	15	20	25	30	35	40	45	50
	Mass Flow	LB/HR			265.7	340.3	418.1	497.7	584.6	681.3	788.5	906.0	1033.6	1171.0	1317.9	1474.6	1640.9
	Suct P	PSIA			18.3	20.9	23.7	26.9	30.4	34.3	38.5	43.1	48.2	53.7	59.7	66.3	73.3
	Disch P	PSIA			153.1	153.1	153.1	153.1	153.1	153.1	153.1	153.1	153.1	153.1	153.1	153.1	153.1
	Pressure Ratio				8.4	7.3	6.5	5.7	5.0	4.5	4.0	3.6	3.2	2.9	2.6	2.3	2.1
90	Power	BHP					29.1	31.9	34.2	36.1	37.9	39.4	40.7	41.6	42.1	42.2	41.8
	Capacity	BTU/HR					181,037	222,967	265,466	311,200	361,968	418,412	480,648	548,608	622,061	701,005	785,338
	EER	BTU/W-HR					7.77	8.70	9.68	10.73	11.91	13.23	14.72	16.43	18.40	20.70	23.41
	RGT	F					0	5	10	15	20	25	30	35	40	45	50
	Mass Flow	LB/HR					385.2	472.6	560.7	655.0	759.4	874.9	1001.9	1140.1	1289.0	1448.5	1618.3
	Suct P	PSIA					23.7	26.9	30.4	34.3	38.5	43.1	48.2	53.7	59.7	66.3	73.3
	Disch P	PSIA					180.8	180.8	180.8	180.8	180.8	180.8	180.8	180.8	180.8	180.8	180.8
	Pressure Ratio						7.6	6.7	5.9	5.3	4.7	4.2	3.8	3.4	3.0	2.7	2.5
100	Power	BHP							36.3	38.9	41.1	43.1	44.9	46.4	47.6	48.4	48.7
	Capacity	BTU/HR							247,294	293,617	342,288	395,820	455,233	520,834	592,494	670,163	753,638
	EER	BTU/W-HR							8.50	9.40	10.37	11.44	12.64	13.99	15.52	17.28	19.30
	RGT	F							10	15	20	25	30	35	40	45	50
	Mass Flow	LB/HR							535.6	633.6	736.1	848.4	972.6	1109.3	1258.1	1419.0	1591.3
	Suct P	PSIA							30.4	34.3	38.5	43.1	48.2	53.7	59.7	66.3	73.3
	Disch P	PSIA							212.0	212.0	212.0	212.0	212.0	212.0	212.0	212.0	212.0
	Pressure Ratio								7.0	6.2	5.5	4.9	4.4	3.9	3.5	3.2	2.9

LEGEND

— Water-cooled heads required
— N/A

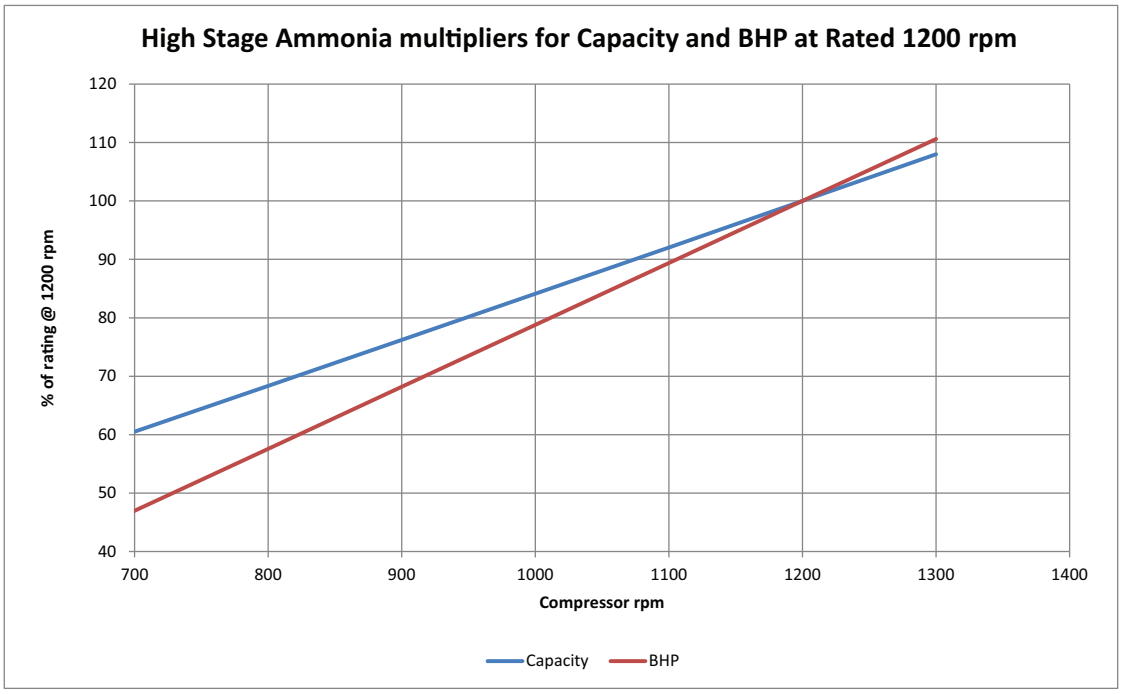

Fig. 25 — Multiplying Factors — High Stage Ammonia Multiplier

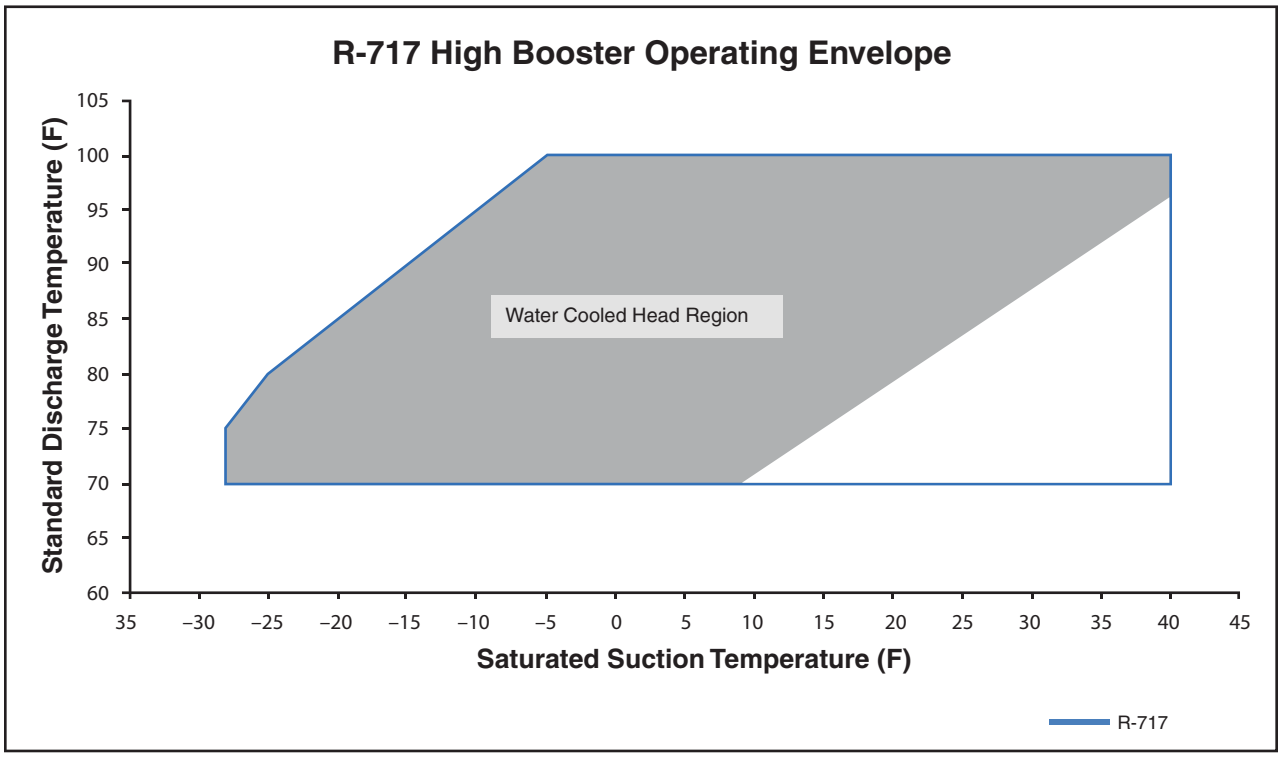

Fig. 26 — Operating Envelope - High Stage R-717

AMMONIA BOOSTER LOW STAGE COMPRESSORS

Refrigeration effect values given are based on:

1. 10°F superheated suction gas.
2. Liquid at the expansion valve being cooled to the saturated discharge temperature of the booster compressor, as when using a flash type intercooler. When the liquid is sub-cooled to some higher temperature, the compressor rating is decreased 2% for each 10°F higher liquid temperature to the evaporator. See Fig. 27.
3. Three suction valve springs per cylinder. All compressors are factory equipped with size springs and three of these must be removed in the field for booster application.

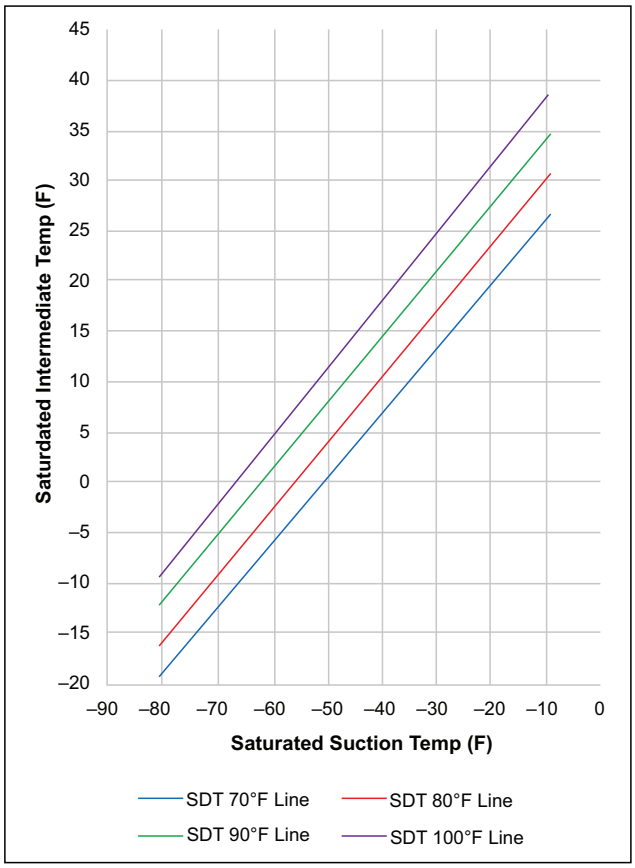

Fig. 27 — Optimum Intermediate Temperature for Low Stage Ammonia Compression, Suction Temperature (F)

R Factor — In a staged compression system, the high stage compressor must have sufficient capacity to handle both the low stage, or booster compressor load, and the heat added to the refrigerant by the low stage compressor.

For THR factors for high stage and low stage heat rejection, see Tables 20 and 24. To determine the required capacity of a high stage compressor, multiple the low stage capacity by the "R" Factor corresponding to the saturated discharge temperature. If any additional loads are to be handled by the high stage compressor at its operating suction temperature level, these loads must be added to arrive at the total tonnage capacity of the high stage compressor.

Compressor Operating Limits — Operation of ammonia compressors within the limits indicated in the published rating tables will result in trouble-free operation providing the following recommendations and limitations are applied. For physical data see Table 18; for ratings information see Tables 25-27 and Fig. 28 and 29.

Discharge Pressure Switch — For booster operation, an additional discharge pressure switch is usually required to accomplish one or both of the following:

1. To automatically control the booster from the interstage pressure.
2. To prevent booster compressor operation above a specified interstage pressure to stay within the installed motor horsepower.

Notes for Ammonia Ratings

1. With superheating of the suction gas, compressor rating will be decreased slightly.
2. When selecting a condenser, allowance must be made for any pressure drop in the interconnecting hot gas piping.
3. Power input to the compressor is given in brake horsepower. These values are compressor bhp and do not include any losses incurred by the use of a belt drive. Approximately 3% should be added to these values to include allowance for belt drive losses.
4. Selection of the motor size should be based on the maximum suction and condensing condition under which the compressor will operate. If the motor is selected for the brake horsepower occurring at normal operating suction pressure, it may be seriously overloaded during pulldown or other abnormal periods.
5. Water temperature leaving head should not exceed 120°F.
6. Operating pressure ratio should not exceed those shown by rating table and curves.
7. Capacities and brake horsepower at lower speeds are approximately proportional to rpm.

Table 24 — THR Factors - Low Stage Heat Rejection

MULTIPLY THE CAPACITY BY THE THR FACTOR TO DETERMINE MID-STAGE HEAT REJECTION (BTU/HR)										
Low Stage Booster Heat Rejection Factors for Ammonia with Water-Cooled Heads										
SDT (F)	SST (F)									
	-60	-55	-50	-45	-40	-35	-30	-25	-20	-15
-10	1.182	1.159	1.135	1.113	1.096	1.078	1.060	—	—	—
0	1.230	1.200	1.174	1.150	1.129	1.109	1.090	1.072	—	—
10	1.274	1.241	1.212	1.184	1.160	1.139	1.119	1.100	1.081	—
20	1.323	1.288	1.254	1.225	1.199	1.173	1.515	1.131	1.112	1.098
30	1.379	1.338	1.300	1.268	1.239	1.212	1.189	1.168	1.149	1.131

Table 25 — 5H41, R-717 — Low Stage Booster Rating at 1450 rpm

SDT (F)	5H41, R-717 LOW STAGE BOOSTER RATING AT 1450 RPM		SST (F)									
			-60	-55	-50	-45	-40	-35	-30	-25	-20	-15
-10	Power	BHP	5.5	5.6	5.6	5.6	5.6	5.5	5.3			
	Capacity	Btu/hr	41,831	51,094	61,670	73,699	87,317	102,666	119,902			
	EER	Btu/W-hr	9.54	11.42	13.64	16.29	19.48	23.37	28.22			
	RGT	F	-50	-45	-40	-35	-30	-25	-20			
	Mass Flow	lb/hr	74.4	90.6	108.9	129.7	153.1	179.4	208.9			
	Suct P	psia	5.5	6.5	7.7	8.9	10.4	12.0	13.9			
	Disch P	psia	23.7	23.7	23.7	23.7	23.7	23.7	23.7			
	Pressure Ratio		4.3	3.6	3.1	2.7	2.3	2.0	1.7			
0	Power	BHP	6.0	6.3	6.4	6.5	6.6	6.6	6.5	6.3	6.1	
	Capacity	Btu/hr	37,841	46,821	57,089	68,783	82,037	96,991	113,797	132,620	153,600	
	EER	Btu/W-hr	7.83	9.34	11.09	13.14	15.55	18.44	21.92	26.19	31.51	
	RGT	F	-50	-45	-40	-35	-30	-25	-20	-15	-10	
	Mass Flow	lb/hr	68.6	84.6	102.8	123.4	146.6	172.8	202.0	234.7	270.9	
	Suct P	psia	5.5	6.5	7.7	8.9	10.4	12.0	13.9	15.9	18.3	
	Disch P	psia	30.4	30.4	30.4	30.4	30.4	30.4	30.4	30.4	30.4	
	Pressure Ratio		5.5	4.7	4.0	3.4	2.9	2.5	2.2	1.9	1.7	
10	Power	BHP	6.5	6.9	7.2	7.4	7.6	7.7	7.7	7.7	7.5	
	Capacity	Btu/hr	33,528	42,211	52,159	63,506	76,382	90,928	107,290	125,632	146,097	
	EER	Btu/W-hr	6.43	7.66	9.07	10.69	12.57	14.76	17.35	20.45	24.19	
	RGT	F	-50	-45	-40	-35	-30	-25	-20	-15	-10	
	Mass Flow	lb/hr	62.0	77.8	95.8	116.2	139.2	165.2	194.2	226.6	262.7	
	Suct P	psia	5.5	6.5	7.7	8.9	10.4	12.0	13.9	16.0	18.3	
	Disch P	psia	38.5	38.5	38.5	38.5	38.5	38.5	38.5	38.5	38.5	
	Pressure Ratio		6.9	5.9	5.0	4.3	3.7	3.2	2.8	2.4	2.1	
20	Power	BHP	6.8	7.4	7.8	8.2	8.6	8.8	9.0	9.1	9.1	9.0
	Capacity	Btu/hr	28,888	37,261	46,876	57,862	70,348	84,470	100,375	118,221	138,152	160,352
	EER	Btu/W-hr	5.28	6.31	7.46	8.76	10.25	11.96	13.95	16.28	19.02	22.30
	RGT	F	-50	-45	-40	-35	-30	-25	-20	-15	-10	-5
	Mass Flow	lb/hr	54.5	70.1	87.8	108.0	130.8	156.5	185.4	217.6	253.4	293.1
	Suct P	psia	5.5	6.5	7.7	8.9	10.4	12.0	13.9	16.0	18.3	20.9
	Disch P	psia	48.2	48.2	48.2	48.2	48.2	48.2	48.2	48.2	48.2	48.2
	Pressure Ratio		8.7	7.4	6.3	5.4	4.6	4.0	3.5	3.0	2.6	2.3
30	Power	BHP	6.9	7.7	8.4	8.9	9.5	9.9	10.2	10.5	10.6	10.7
	Capacity	Btu/hr	23,921	31,972	41,240	51,852	63,933	77,619	93,053	110,389	129,769	151,375
	EER	Btu/W-hr	4.31	5.19	6.16	7.23	8.43	9.80	11.36	13.16	15.24	17.67
	RGT	F	-50	-45	-40	-35	-30	-25	-20	-15	-10	-5
	Mass Flow	lb/hr	46.1	61.4	78.9	98.8	121.4	146.8	175.4	207.3	242.9	282.4
	Suct P	psia	5.5	6.5	7.7	8.9	10.4	12.0	13.9	16.0	18.3	20.9
	Disch P	psia	59.7	59.7	59.7	59.7	59.7	59.7	59.7	59.7	59.7	59.7
	Pressure Ratio		10.8	9.1	7.8	6.7	5.7	5.0	4.3	3.7	3.3	2.9

LEGEND

— Water-cooled heads required
— N/A

Table 26 — 5H61, R-717 — Low Stage Booster Rating at 1450 rpm

SDT (F)	5H61, R-717 LOW STAGE BOOSTER RATING AT 1450 RPM		SST (F)									
			-60	-55	-50	-45	-40	-35	-30	-25	-20	-15
-10	Power	BHP	8.2	8.4	8.5	8.5	8.4	8.3	8.0			
	Capacity	Btu/hr	62,676	76,544	92,377	110,386	130,773	153,753	179,555			
	EER	Btu/W-hr	9.51	11.38	13.58	16.19	19.33	23.15	27.87			
	RGT	F	-50	-45	-40	-35	-30	-25	-20			
	Mass Flow	lb/hr	111.5	135.7	163.1	194.2	229.3	268.7	312.8			
	Suct P	psia	5.5	6.5	7.7	8.9	10.4	12.0	13.9			
	Disch P	psia	23.7	23.7	23.7	23.7	23.7	23.7	23.7			
	Pressure Ratio		4.3	3.6	3.1	2.7	2.3	2.0	1.7			
0	Power	BHP	9.0	9.4	9.6	9.8	9.9	9.9	9.8	9.5	9.2	
	Capacity	Btu/hr	56,713	70,157	85,530	103,038	122,881	145,269	170,430	198,608	230,025	
	EER	Btu/W-hr	7.82	9.33	11.07	13.10	15.50	18.34	21.77	25.94	31.12	
	RGT	F	-50	-45	-40	-35	-30	-25	-20	-15	-10	
	Mass Flow	lb/hr	102.9	126.8	154.0	184.8	219.6	258.8	302.5	351.4	405.7	
	Suct P	psia	5.5	6.5	7.7	8.9	10.4	12.0	13.9	16.0	18.3	
	Disch P	psia	30.4	30.4	30.4	30.4	30.4	30.4	30.4	30.4	30.4	
	Pressure Ratio		5.5	4.7	4.0	3.4	2.9	2.5	2.2	1.9	1.7	
10	Power	BHP	9.7	10.3	10.7	11.1	11.4	11.5	11.6	18.4	19.2	
	Capacity	Btu/hr	50,268	63,268	78,162	95,151	114,429	136,206	160,703	188,200	218,000	
	EER	Btu/W-hr	6.43	7.67	9.07	10.69	12.56	14.74	17.30	10.56	11.73	
	RGT	F	-50	-45	-40	-35	-30	-25	-20	-15	-10	
	Mass Flow	lb/hr	93.0	116.6	143.5	174.1	208.6	247.4	290.9	327.5	379.7	
	Suct P	psia	5.5	6.5	7.7	8.9	10.4	12.0	13.9	34.3	38.5	
	Disch P	psia	38.5	38.5	38.5	38.5	38.5	38.5	38.5	180.8	180.8	
	Pressure Ratio		6.9	5.9	5.0	4.3	3.7	3.2	2.8	5.3	4.7	
20	Power	BHP	10.2	11.0	11.7	12.3	12.8	13.2	13.4	13.6	13.6	13.5
	Capacity	Btu/hr	43,334	55,871	70,267	86,716	105,410	126,554	150,367	177,085	206,923	240,158
	EER	Btu/W-hr	5.29	6.32	7.47	8.78	10.27	11.98	13.95	16.26	18.98	22.21
	RGT	F	-50	-45	-40	-35	-30	-25	-20	-15	-10	-5
	Mass Flow	lb/hr	81.8	105.1	131.7	161.9	196.0	234.5	277.7	325.9	379.5	439.0
	Suct P	psia	5.5	6.5	7.7	8.9	10.4	12.0	13.9	16.0	18.3	20.9
	Disch P	psia	48.2	48.2	48.2	48.2	48.2	48.2	48.2	48.2	48.2	48.2
	Pressure Ratio		8.7	7.4	6.3	5.4	4.6	4.0	3.5	3.0	2.6	2.3
30	Power	BHP	10.3	11.5	12.5	13.4	14.1	14.8	15.3	15.6	15.9	16.0
	Capacity	Btu/hr	35,912	47,967	61,845	77,734	95,823	116,314	139,421	165,376	194,391	226,738
	EER	Btu/W-hr	4.33	5.21	6.18	7.25	8.46	9.83	11.39	13.18	15.25	17.67
	RGT	F	-50	-45	-40	-35	-30	-25	-20	-15	-10	-5
	Mass Flow	lb/hr	69.2	92.1	118.3	148.1	181.9	220.0	262.8	310.6	363.9	423.0
	Suct P	psia	5.5	6.5	7.7	8.9	10.4	12.0	13.9	16.0	18.3	20.9
	Disch P	psia	59.7	59.7	59.7	59.7	59.7	59.7	59.7	59.7	59.7	59.7
	Pressure Ratio		10.8	9.1	7.8	6.7	5.7	5.0	4.3	3.7	3.3	2.9

LEGEND

— Water-cooled heads required
— N/A

Table 27 — 5H81, R-717 — Low Stage Booster Rating at 1450 rpm

SDT (F)	5H81, R-717 LOW STAGE BOOSTER RATING AT 1450 RPM		SST (F)									
			-60	-55	-50	-45	-40	-35	-30	-25	-20	-15
-10	Power	BHP	10.9	11.2	11.3	11.3	11.2	11.0	10.7			
	Capacity	Btu/hr	83,568	102,059	123,170	147,182	174,365	205,004	239,408			
	EER	Btu/W-hr	9.51	11.38	13.58	16.19	19.33	23.15	27.88			
	RGT	F	-50	-45	-40	-35	-30	-25	-20			
	Mass Flow	lb/hr	148.7	180.9	217.5	259.0	305.8	358.3	417.0			
	Suct P	psia	5.5	6.5	7.7	8.9	10.4	12.0	13.9			
	Disch P	psia	23.7	23.7	23.7	23.7	23.7	23.7	23.7			
	Pressure Ratio		4.3	3.6	3.1	2.7	2.3	2.0	1.7			
0	Power	BHP	12.1	12.5	12.8	13.1	13.2	13.2	13.0	12.7	12.3	
	Capacity	Btu/hr	75,618	93,543	114,041	137,385	163,842	193,693	227,240	264,812	306,702	
	EER	Btu/W-hr	7.82	9.33	11.07	13.10	15.50	18.34	21.77	25.94	31.13	
	RGT	F	-50	-45	-40	-35	-30	-25	-20	-15	-10	
	Mass Flow	lb/hr	137.1	169.0	205.3	246.4	292.9	345.0	403.4	468.5	540.9	
	Suct P	psia	5.5	6.5	7.7	8.9	10.4	12.0	13.9	16.0	18.3	
	Disch P	psia	30.4	30.4	30.4	30.4	30.4	30.4	30.4	30.4	30.4	
	Pressure Ratio		5.5	4.7	4.0	3.4	2.9	2.5	2.2	1.9	1.7	
10	Power	BHP	13.0	13.7	14.3	14.8	15.1	15.4	15.4	15.4	15.1	
	Capacity	Btu/hr	67,024	84,358	104,217	126,868	152,573	181,609	214,271	250,884	291,735	
	EER	Btu/W-hr	6.43	7.67	9.07	10.69	12.56	14.74	17.30	20.36	24.03	
	RGT	F	-50	-45	-40	-35	-30	-25	-20	-15	-10	
	Mass Flow	lb/hr	124.0	155.5	191.4	232.1	278.1	329.9	387.9	452.6	524.5	
	Suct P	psia	5.5	6.5	7.7	8.9	10.4	12.0	13.9	34.3	38.5	
	Disch P	psia	38.5	38.5	38.5	38.5	38.5	38.5	38.5	180.8	180.8	
	Pressure Ratio		6.9	5.9	5.0	4.3	3.7	3.2	2.8	5.3	4.7	
20	Power	BHP	13.6	14.7	15.6	16.4	17.1	17.6	17.9	18.1	18.1	18.0
	Capacity	Btu/hr	57,778	74,495	93,690	115,621	140,547	168,739	200,490	236,114	275,898	320,212
	EER	Btu/W-hr	5.29	6.32	7.47	8.78	10.27	11.98	13.95	16.26	18.98	22.21
	RGT	F	-50	-45	-40	-35	-30	-25	-20	-15	-10	-5
	Mass Flow	lb/hr	109.1	140.1	175.6	215.8	261.4	312.7	370.2	434.5	506.0	585.3
	Suct P	psia	5.5	6.5	7.7	8.9	10.4	12.0	13.9	16.0	18.3	20.9
	Disch P	psia	48.2	48.2	48.2	48.2	48.2	48.2	48.2	48.2	48.2	48.2
	Pressure Ratio		8.7	7.4	6.3	5.4	4.6	4.0	3.5	3.0	2.6	2.3
30	Power	BHP	13.8	15.3	16.6	17.8	18.8	19.7	20.3	20.9	21.2	21.3
	Capacity	Btu/hr	47,882	63,956	82,461	103,646	127,765	155,086	185,896	220,502	259,190	302,318
	EER	Btu/W-hr	4.33	5.21	6.18	7.25	8.46	9.83	11.39	13.18	15.25	17.67
	RGT	F	-50	-45	-40	-35	-30	-25	-20	-15	-10	-5
	Mass Flow	lb/hr	92.3	122.8	157.8	197.5	242.6	293.4	350.4	414.2	485.2	564.0
	Suct P	psia	5.5	6.5	7.7	8.9	10.4	12.0	13.9	16.0	18.3	20.9
	Disch P	psia	59.7	59.7	59.7	59.7	59.7	59.7	59.7	59.7	59.7	59.7
	Pressure Ratio		10.8	9.1	7.8	6.7	5.7	5.0	4.3	3.7	3.3	2.9

LEGEND

— Water-cooled heads required
— N/A

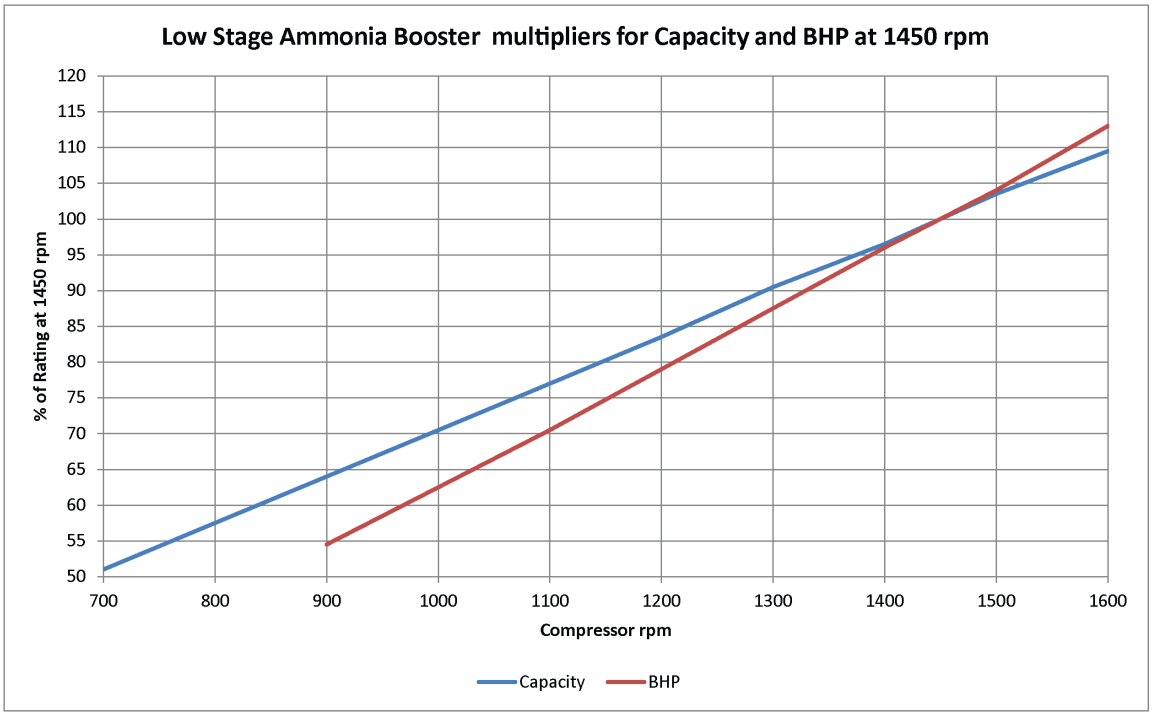

Fig. 28 — Multiplying factors – Low Stage Ammonia Booster for Other Than Rated Speeds

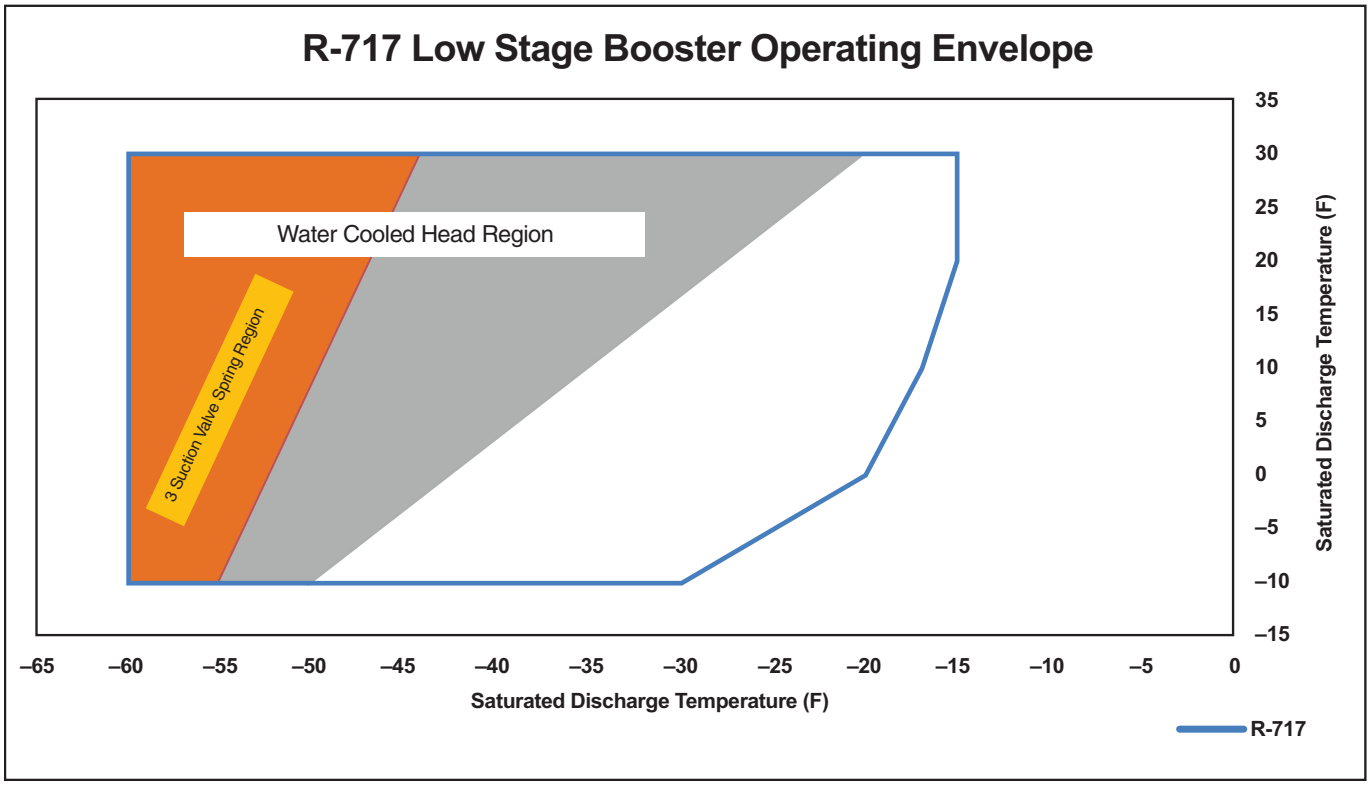

Fig. 29 — Operating Envelope - Low Stage R-717

Accessories

All 5H ammonia compressors have the following accessory items offered through Carlyle.

- OPSS electronic control, P/N 06DA509570
- Oil Cooler Kit, P/N 5H41-B283
- Discharge Line Muffler, 2 $^{5}/_{8}$ in. ODF, P/N LM680007
- Unloader Solenoid Coils (for Unloading models only)

See Tables 28-31 for additional accessories.

Table 28 — Crankcase Heaters

Part Number	QTY	WEIGHT (LB)	VOLTS	WATTS	USAGE
5H40-381	1	1	115	200	5H41-5H121*
5H40-391			230		

* 5H121 compressor model is not released for production.

NOTE: Two (2) crankcase heaters are required for use on 5H81 and 5H121 compressors.

Table 29 — Service Valve Accessory Parts

MODEL	SUCTION VALVE	DISCHARGE VALVE	VALVE ADAPTER, (QTY)	BOLTS, (QTY)	GASKETS, (QTY)
***5H41**	EM13FG051	EM13FG045	5H40-7712, (2)	AA06GR335, (8)	5H40-1361, (4)
			5H40-7722, (2)	AA44AA263, (16)	KK71EW147, (2)
			one each per service valve	AA44AA324, (8)	
***5H61**	EM13FG052	EM13FG052	N/A	AA06GR338, (8)	6L65-1101, (2)
***5H81**	EM13FG057	EM13FG052	Discharge, 5H40-1774, (1)	AA06GR338, (8)	6L65-1101, (2)
			Suction, 5H40-1794, (1)	AA44AA230, (8)	

* Parts required to install a suction and discharge service valve set on a 5H ammonia compressor.

Table 30 — Water-Cooled Cylinder Head Kits (Retrofit only)

PART NUMBER	COMPRESSOR USAGE	DESCRIPTION	QTY PER COMPRESSOR	WEIGHT (LBS)
5H660009	5H41	Water-Cooled Side Cylinder Head	2	150
	5H61		3	225
	5H81		4	300
	5H121		6	300
5H660010	5H121*	Water-Cooled Center Cylinder Head	2	120

* 5H121 compressor model is not released for production.

Table 31 — Water-Cooled Cylinder Head Hose Kit (Fig. 33-36)

PART NUMBER	COMPRESSOR USAGE	DESCRIPTION	QTY PER COMPRESSOR	WEIGHT (LBS)
5H660011	5H41	Water-Cooled Hose Kit	1	7
	5H61			
	5H81			
	5H121*		2	14

* 5H121 compressor model is not released for production.

OIL PRESSURE SAFETY SWITCH (OPSS) — Carlyle has approved the following oil pressure safety switch with the 5H ammonia compressors. The OPSS will mount directly to the oil pump bearing end of the compressor. All 5H ammonia compressors will have the OPSS stainless steel sensor (P/N 5H41-7602) installed and leak tested at the factory (see Fig. 30). The electronic oil safety switch (P/N 06DA509570) is provided as an accessory item that is installed by the OEM. The switch must be properly installed and tested for proper operation as a system pre-start condition.



Fig. 30 — Oil Pressure Safety Switch

The oil safety switch is designed to protect the compressor against the loss of lubrication. The OPSS switch will close the control circuit at compressor startup and allow 120 second oil pressure transitional time delay. The switch will open the control circuit and shut the compressor off when:

- The oil pump pressure drops to a minimum 9 psig above the oil sump pressure after 120 seconds, or
- A time-integrated low differential oil pressure (9 psig) between the oil pump and oil sump pressure that is fluctuating 60% of the time ≤ to 9 psig over a 5 minute rolling window.
- The OPSS will not reset automatically, but must be manual reset provided the differential pressure between the oil sump and pump pressure is above 13 psig.

CARLYLE P/N	TIME DELAY (sec)	PRESSURE DIFF (psid)		VOLTS	RESET	REMOTE ALARM CIRCUIT CAPABLE
		Cut-out	Cut-in			
06DA509570	120	9-11	12-14	115/230	Manual	Yes

OIL COOLER KIT — All 5H ammonia models will require oil cooling to maintain oil temperatures below 120°F. Kit 5H41-B283 consists of a shell/tube stainless steel heat exchange that mounts directly to the side of the compressor. Hardware is provided that will allow the end user to route tubing from the heat exchanger to the oil pump bearing head. Installation instruction, 99TA516195, will be provided with the kit. See Fig. 31.

The water flow through the oil cooler should be regulated to maintain a return oil temperature to the compressor below 125°F.

The 5H compressor muffler (Fig. 32) installs downstream of the discharge service valve line and functions to reduce the discharge gas pulsations. Failure to install a muffler may result in discharge line joint refrigerant leakage.

NOTE: Only install a muffler compatible for R-717 refrigerant. The muffler should contain no brass, copper, or bronze material. See Fig. 32.

PART NUMBER	**LM680007**
MODELS	5H41, 5H61, 5H81
WEIGHT (LBS.)	15
INLET / OUTLET	2-5/8" ODF
DIAMETER	6"
REFRIGERANT	R-717
OVERALL LENGTH	23”

SOLENOID COILS — An unloader solenoid coil is required for all 5H models with unloading capability. The table below is a list of qualified solenoid coils that can be applied with the 5H ammonia compressor.

PART NUMBER	QTY/PKG	VOLTAGE	WEIGHT (LBS.)
EF19ZZ001	1	24-1-50/60	1
EF19ZZ002	1	120-1-50/60	1
EF19ZZ003	1	208/240-1-50/60	1
06DA509584	1	24VDC	1

WATER COOLED HEADS — The piping schematic (Fig. 33-36) shows the location for entering/leaving water connections, which are all $^1/_2$ in. FPT. All piping between cylinder heads is factory installed and pressure tested.

The water flow through the cylinder heads should be regulated to maintain a return oil temperature to the compressor below 125°F and a gas discharge temperature below 250°F.

The associated water flow rates are based on an inlet water temperature of 80°F and a 30°F water temperature rise.

Precautionary Notes — The main risks in the use of ammonia as a refrigerant are associated with its toxicity and flammability characteristics. Ammonia gas is severely irritating to wet tissues including eyes, nose, and throat, and it has an unpleasant odor.

The threshold limit value (TLV) for ammonia exposure over an 8-hour period is 25 ppm. This is enough to produce a relatively strong smell without causing eyes to water. For a 15-minute period, the short-term exposure limit (STEL) is 35 ppm.

Only trained technicians with proof of competence should be permitted to work on ammonia refrigeration systems. The standards of competence are defined in BSEN13136 and additional guidance can be found in BSEN378 and the Health and Safety at Work Regulations.

Ammonia is immiscible with mineral oil and draining oil from evaporators is a common maintenance task. This should only be done by trained staff following approved procedures; it requires time and patience, since the cold oil can be very viscous.

Copper, brass, and bronze are easily corroded by ammonia when small amounts of water are present. Pipework is usually steel or stainless steel, and evaporator tubes may be galvanized steel, stainless steel, or aluminum.

5H41, 5H61, and 5H81 Ammonia Compressor Drawings — See Fig. 37-39 for drawings of the 5H41, 5H61, and 5H81 ammonia compressors.

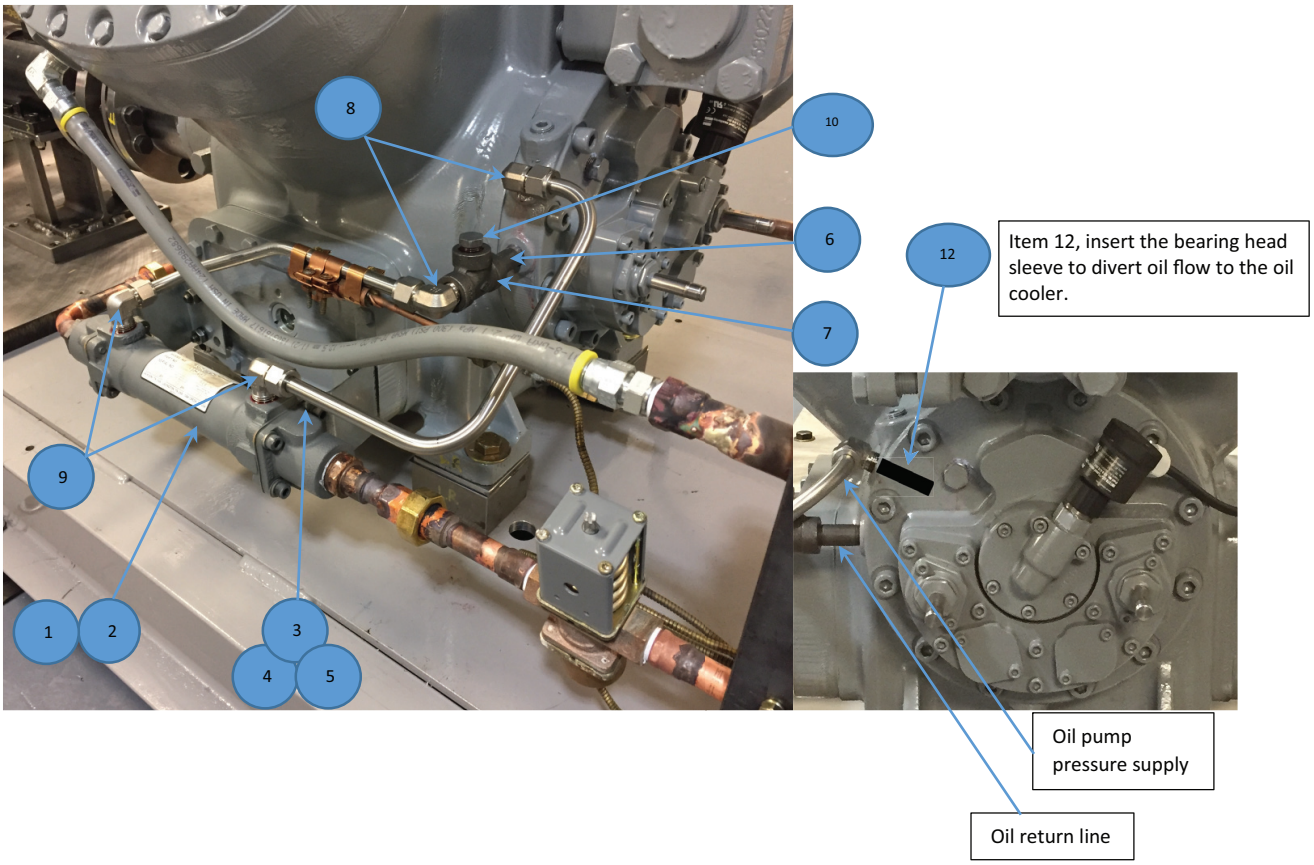

5H41-B283 Oil Cooler Package BOM							
ITEM #	**PART #**	**QTY**	**DESCRIPTION**	**ITEM #**	**PART #**	**QTY**	**DESCRIPTION**
1	KH51ZZ101	1	304 SST Oil Cooler	**7**	CE20RA101	1	3/8" FPT Tee
2	5H40-B243	2	Mounting Brackets	**8**	CA680003	2	3/8" MPT x 1/2" Flare Elbow
3	5H40-1781	4	3/8"-16 x 3.25" LG Stud	**9**	CA680004	2	1/2" MPT x 1/2" Flare Elbow
4	AU11AR241	4	3/8" Lock Washer	**10**	CA63AA101	1	3/8" Hex Head Pipe Plug
5	AT39AA241	4	3/8"-16 Hex Nut	**12**	5H40-7252	1	Bearing Head Sleeve
6	CE01CA110	1	3/8" MPT x 2" LG Nipple				

Fig. 31 — Oil Cooler

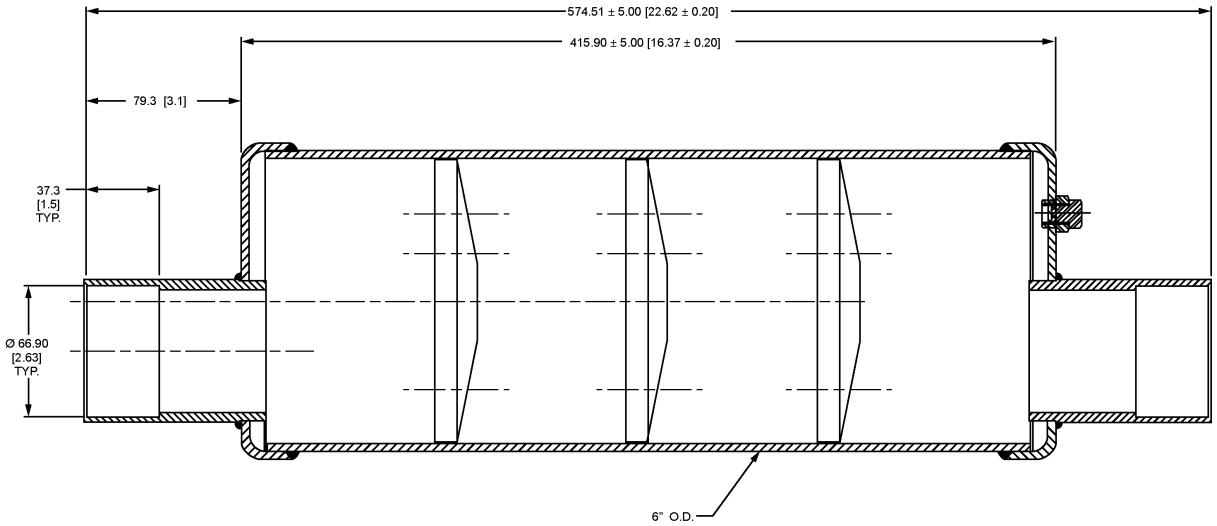

Fig. 32 — Typical Muffler

BILL OF MATERIAL			
ITEM NO.	PART NUMBER	DESCRIPTION	QTY
1	5H40-B222	HOSE ASSY,	1
2	DC82RA201	ELBOW, 45°	2

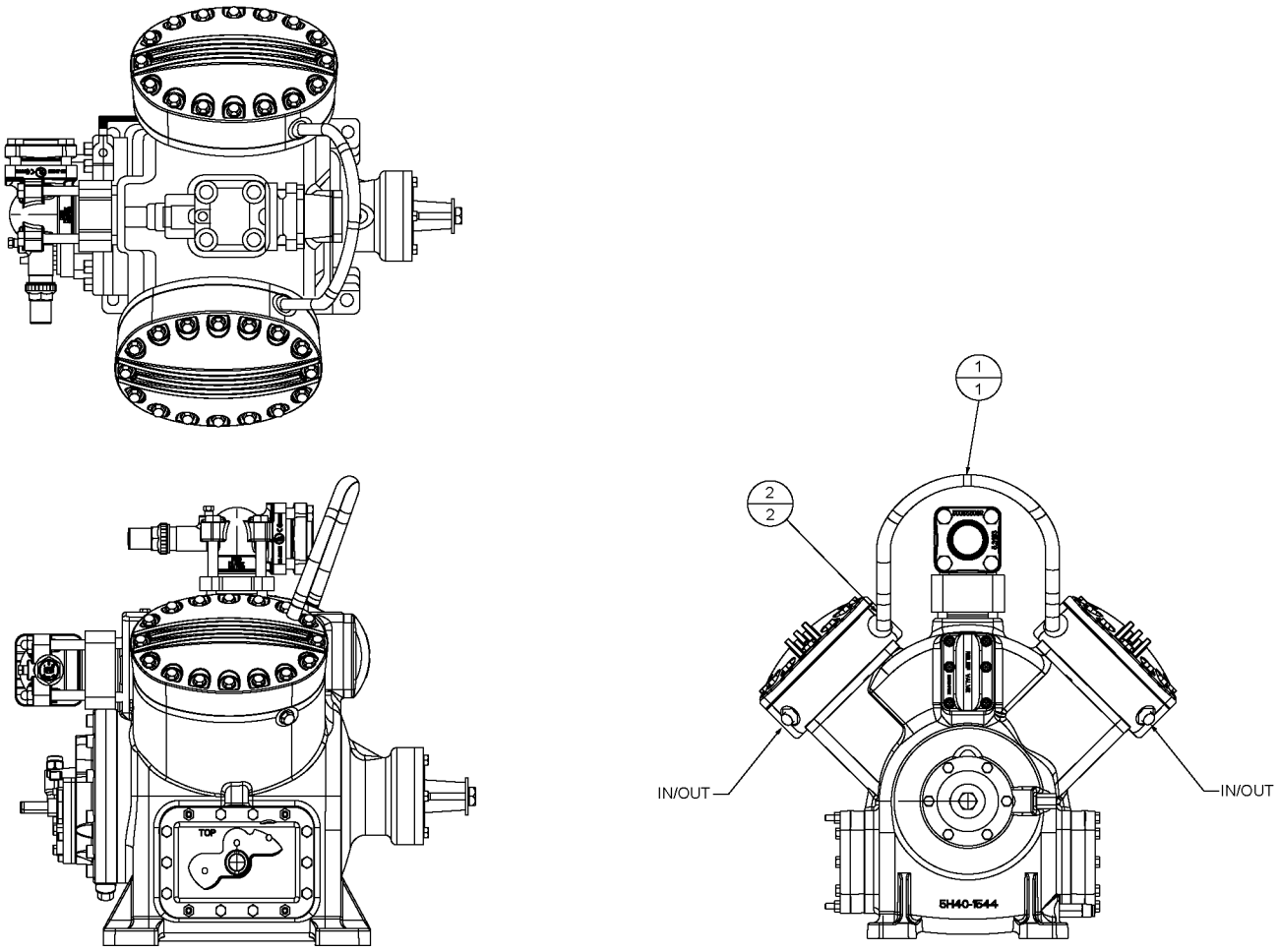

Fig. 33 — Water-Cooled Head Piping Schematic
5H40, 41, or 46 Single Circuit

BILL OF MATERIAL			
ITEM NO.	PART NUMBER	DESCRIPTION	QTY
1	5H40 - B222	HOSE ASSY,	2
2	DC82RA201	ELBOW, 45°	2
3	DC12RA201	ELBOW, 90°	2

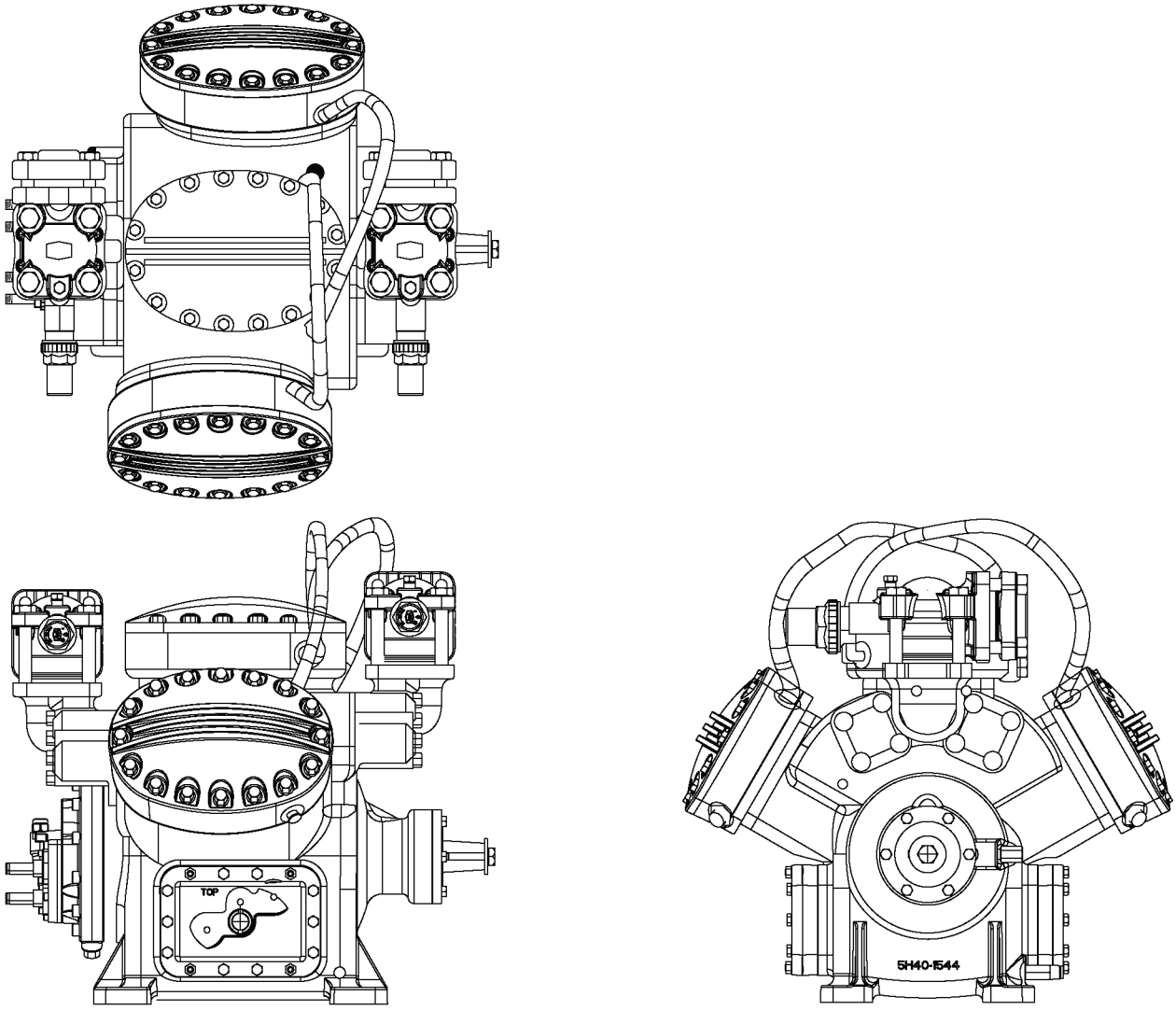

Fig. 34 — Water Cooled Head Piping Schematic
5H60, 61, 66 Single Circuit

BILL OF MATERIAL			
ITEM NO.	PART NUMBER	DESCRIPTION	QTY
1	5H40-B222	HOSE ASSY.	3
2	DC82RA201	ELBOW, 45°	4
3	DC12RA201	ELBOW, 90°	2

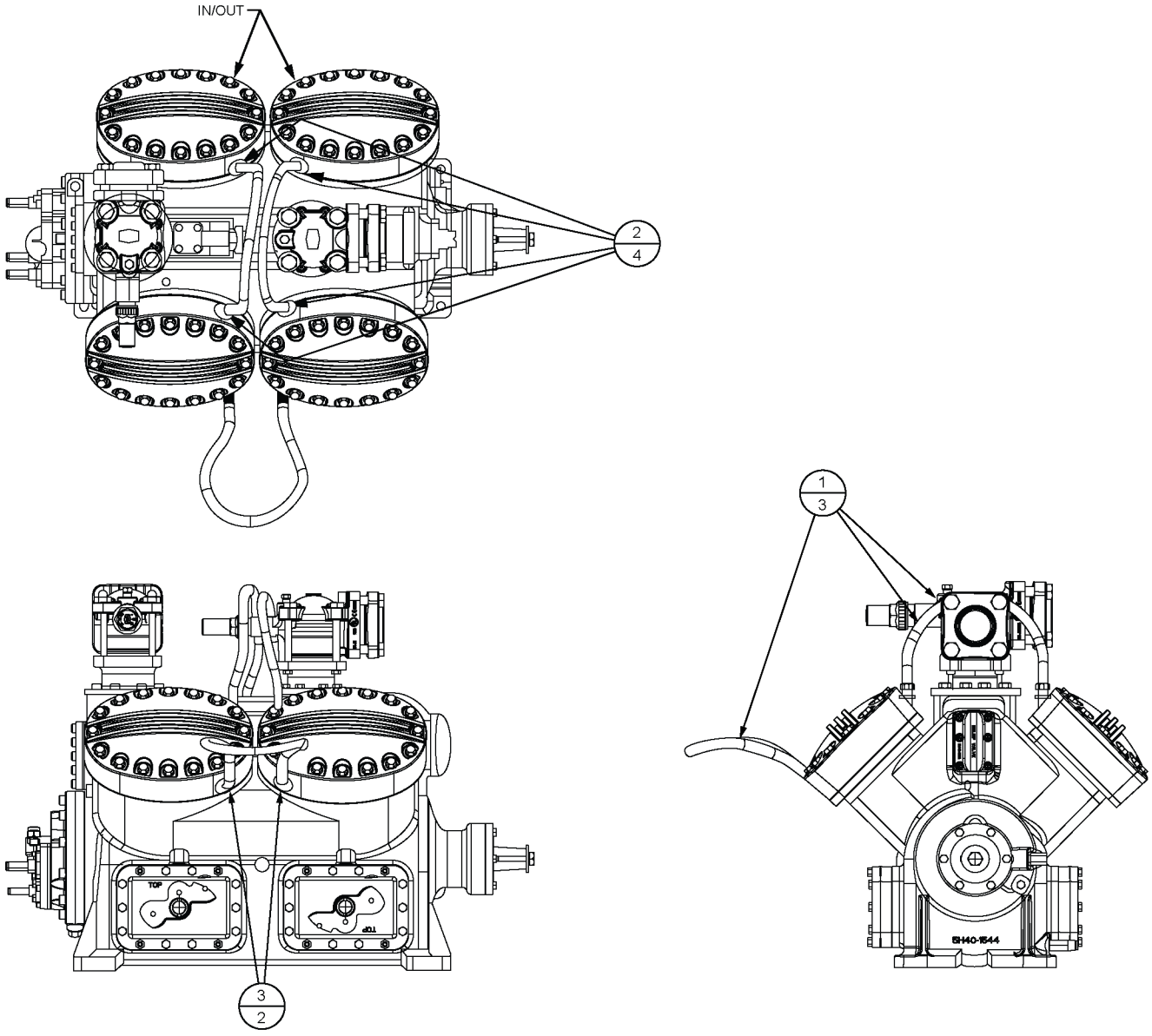

Fig. 35 — Water Cooled Head Piping Schematic
5H80, 81, 86 Single Circuit

BILL OF MATERIAL			
ITEM NO.	PART NUMBER	DESCRIPTION	QTY
1	5H40 - B222	HOSE ASSY,	2
2	DC12RA201	ELBOW, 90°	4

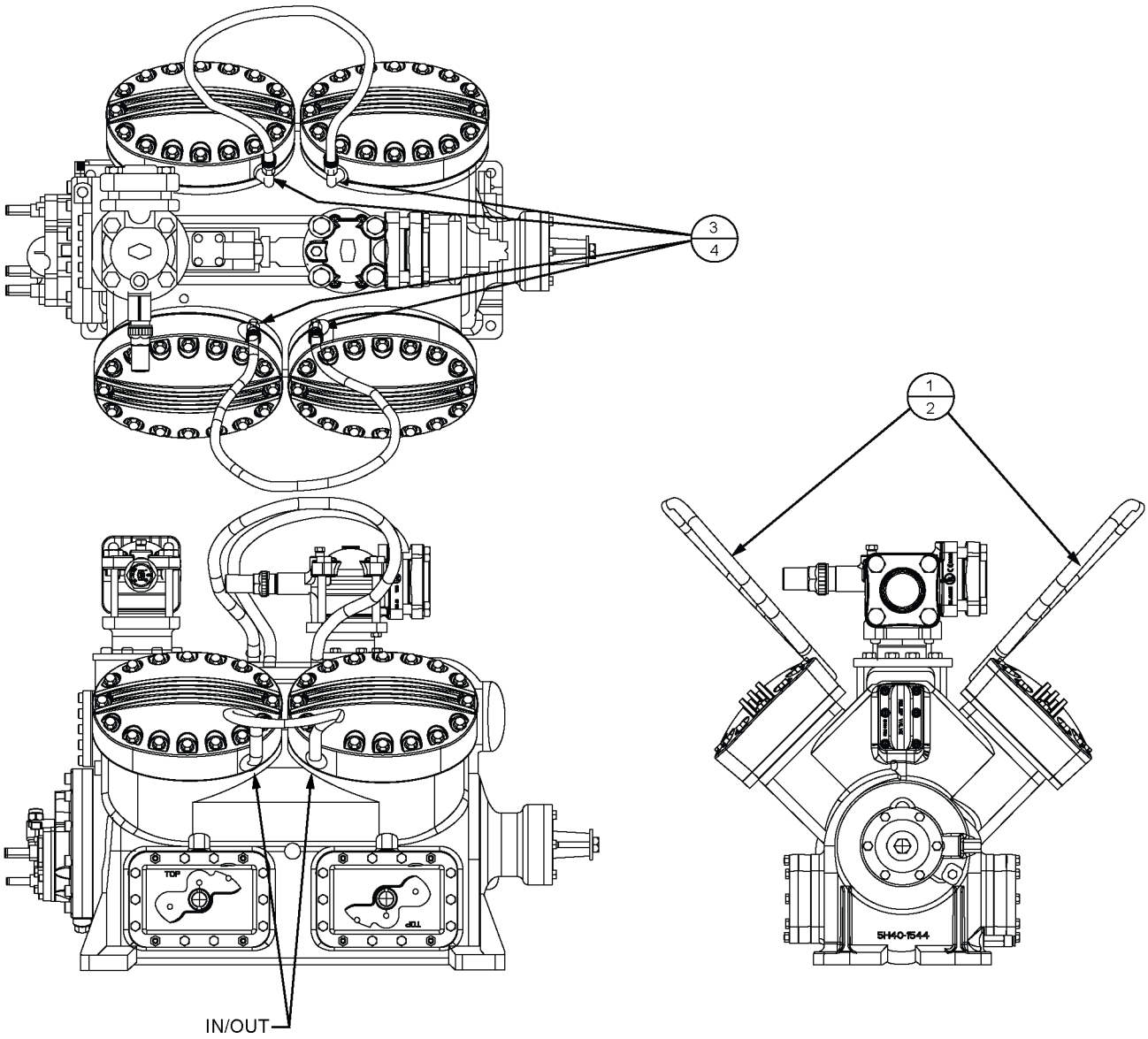

Fig. 36 — Water Cooled Head Piping Schematic
5H80, 81, 86 Dual Circuit

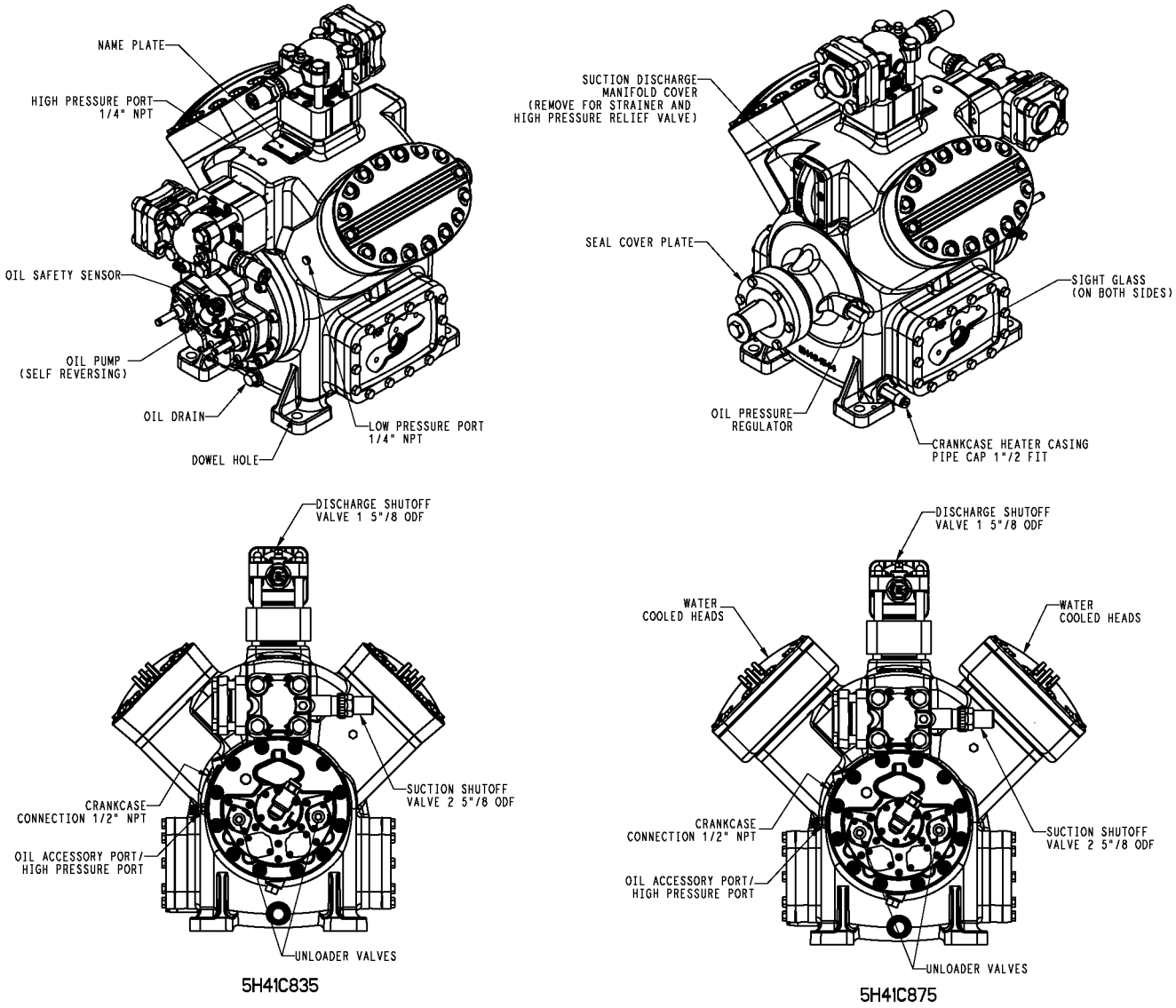

Fig. 37 — 5H41 Ammonia Model

MODEL NO.	A	B	C	D
5H41C835D	30.04 [762.95]	28.32 [719.22]	24.49 [621.98]	12.24 [310.96]
5H41C875D	30.04 [762.95]	28.32 [719.26]	27.58 [700.51]	13.81 [350.66]
5H41C895D	27.65 [702.34]	22.18 [563.25]	24.49 [621.98]	12.24 [310.96]
5H41C905D	27.65 [702.33]	22.78 [578.66]	27.58 [700.51]	13.81 [350.66]

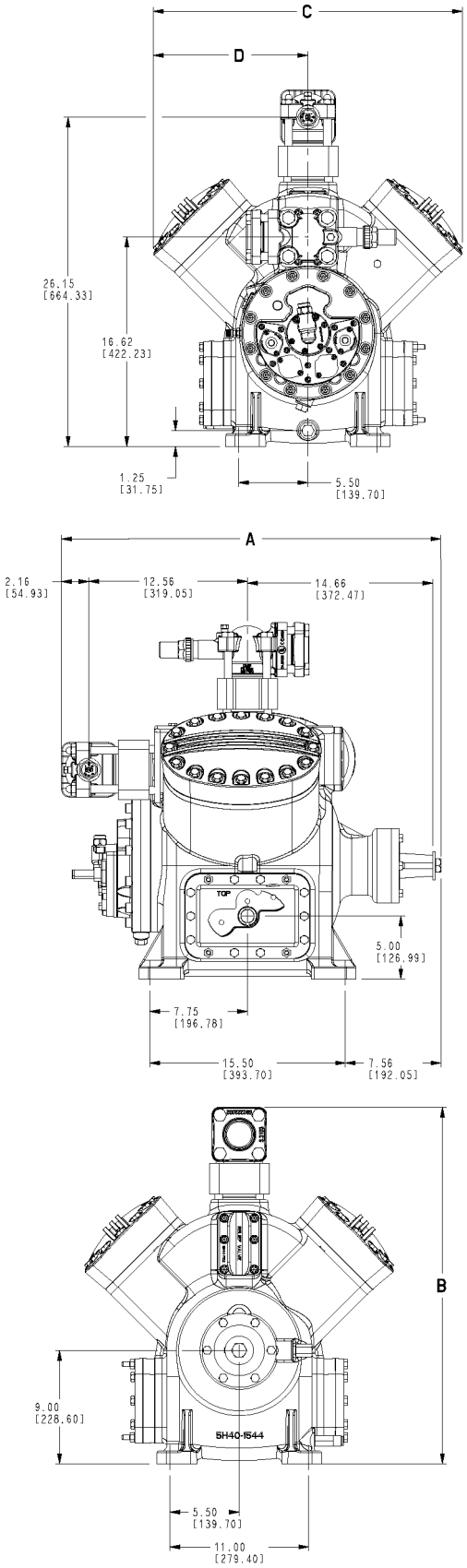

Fig. 37 — 5H41 Ammonia Model (cont)

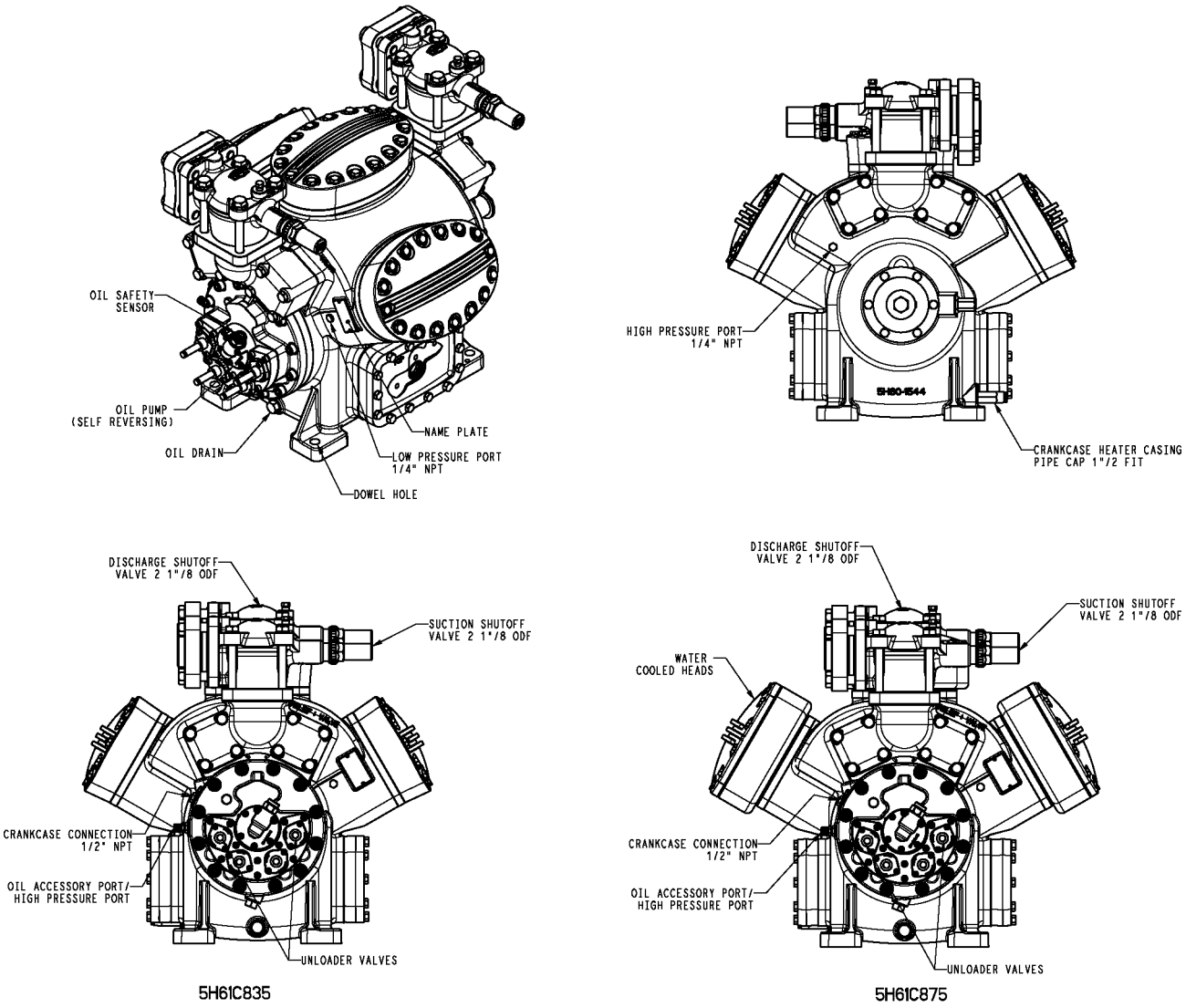

Fig. 38 — 5H61 Ammonia Model

MODEL NO.	A	B	C	D	E
5H61C835D	30.70 [779.76]	26.51 [673.44]	25.45 [646.39	27.15 [689.72]	27.15 [689.72]
5H61C875D	30.70 [779.76]	26.51 [673.44]	25.45 [646.39	30.33 [770.35]	30.25 [768.32]
5H61C895D	32.81 [833.30]	23.42 [594.88]	—	27.15 [689.72]	27.15 [689.72]
5H61C905D	32.81 [833.30]	24.92 [633.06]	—	30.33 [770.35]	30.25 [768.32]

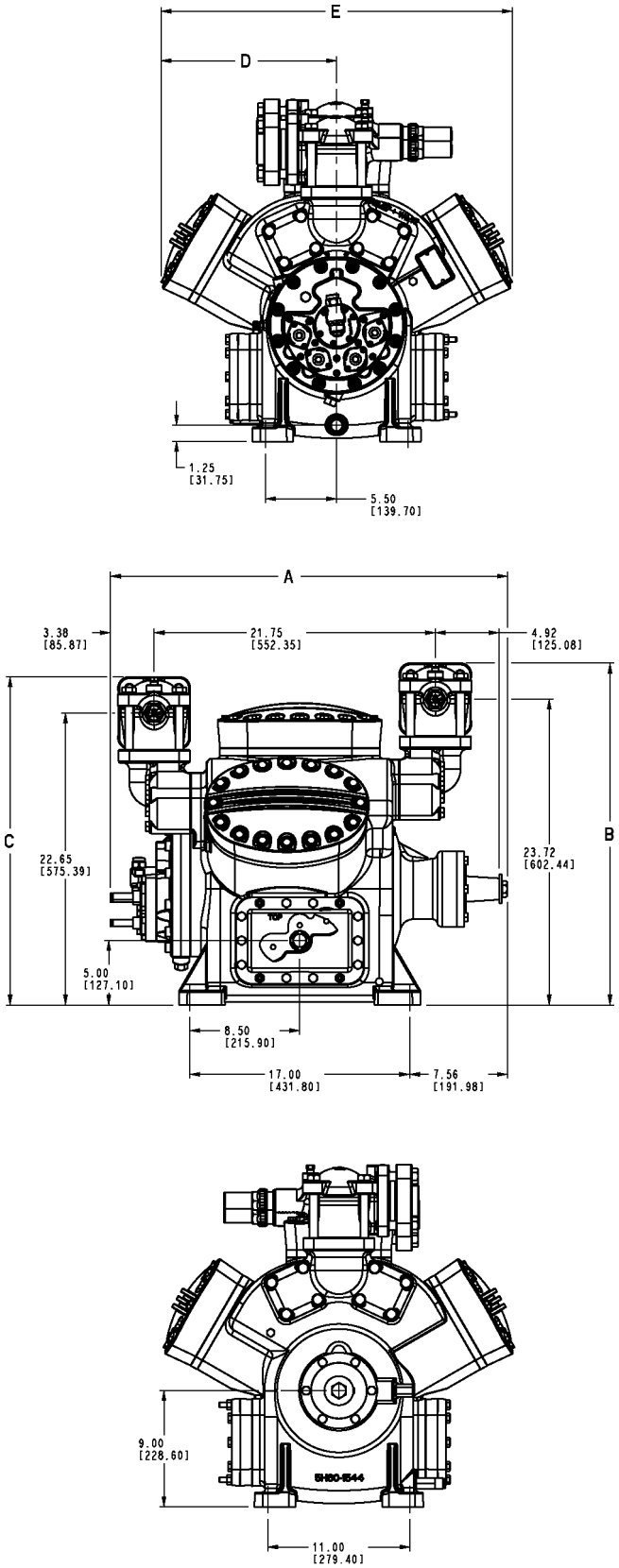

Fig. 38 — 5H61 Ammonia Model (cont)

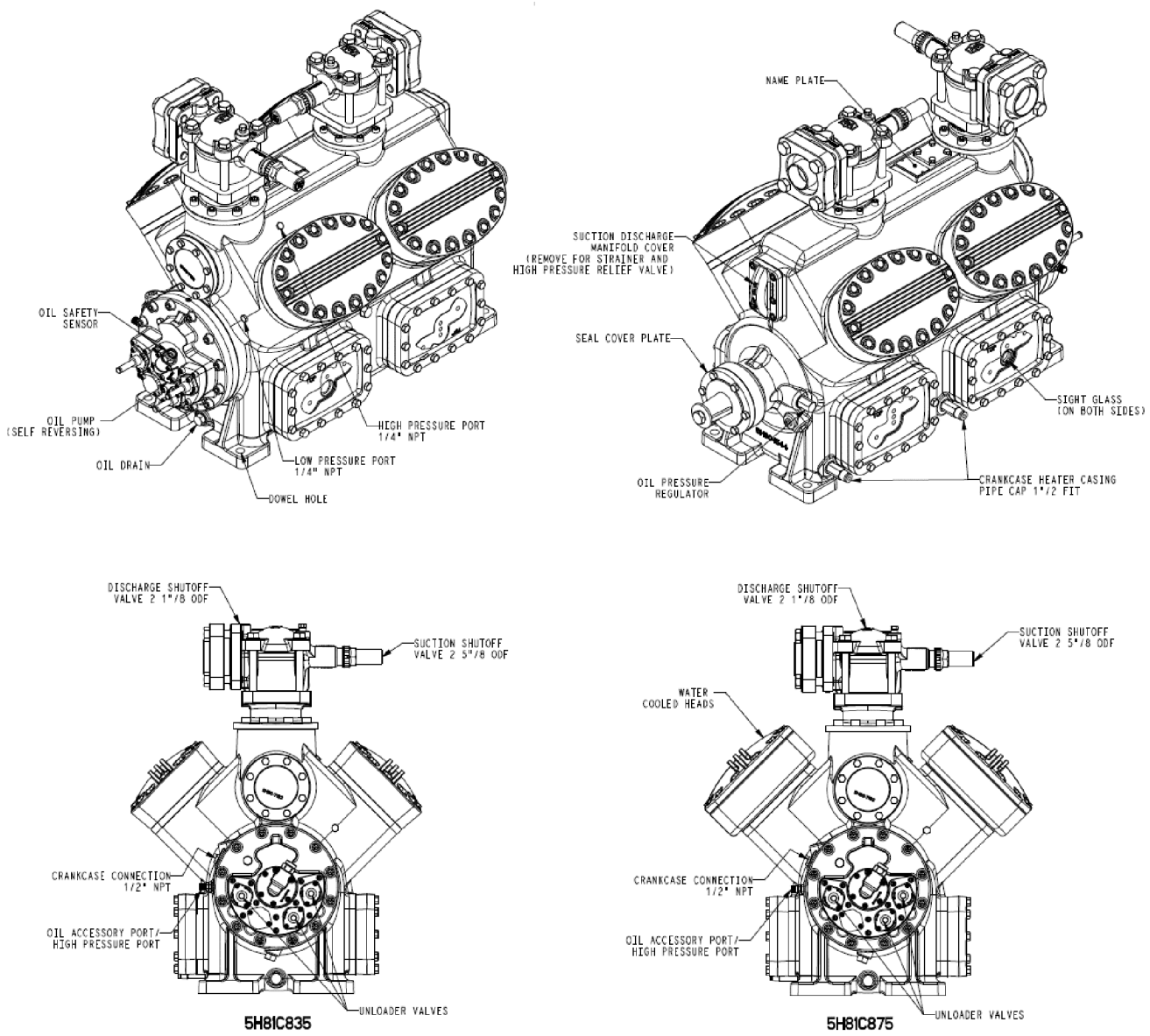

Fig. 39 — 5H81 Ammonia Model

MODEL NO.	A	B	C	D	E
5H81C835D	42.72 [1084.99]	31.17 [791.72]	24.49 [622.12]	12.25 [311.06]	30.70 [779.96]
5H81C875D	42.72 [1084.99]	31.17 [791.72]	27.67 [702.73]	13.83 [351.37]	30.70 [779.96]
5H81C895D	41.16 [1045.51]	23.38 [593.93]	24.49 [622.12]	12.25 [311.06]	—
5H81C905D	41.16 [1045.51]	23.38 [593.93]	27.67 [702.73]	13.83 [351.37]	—

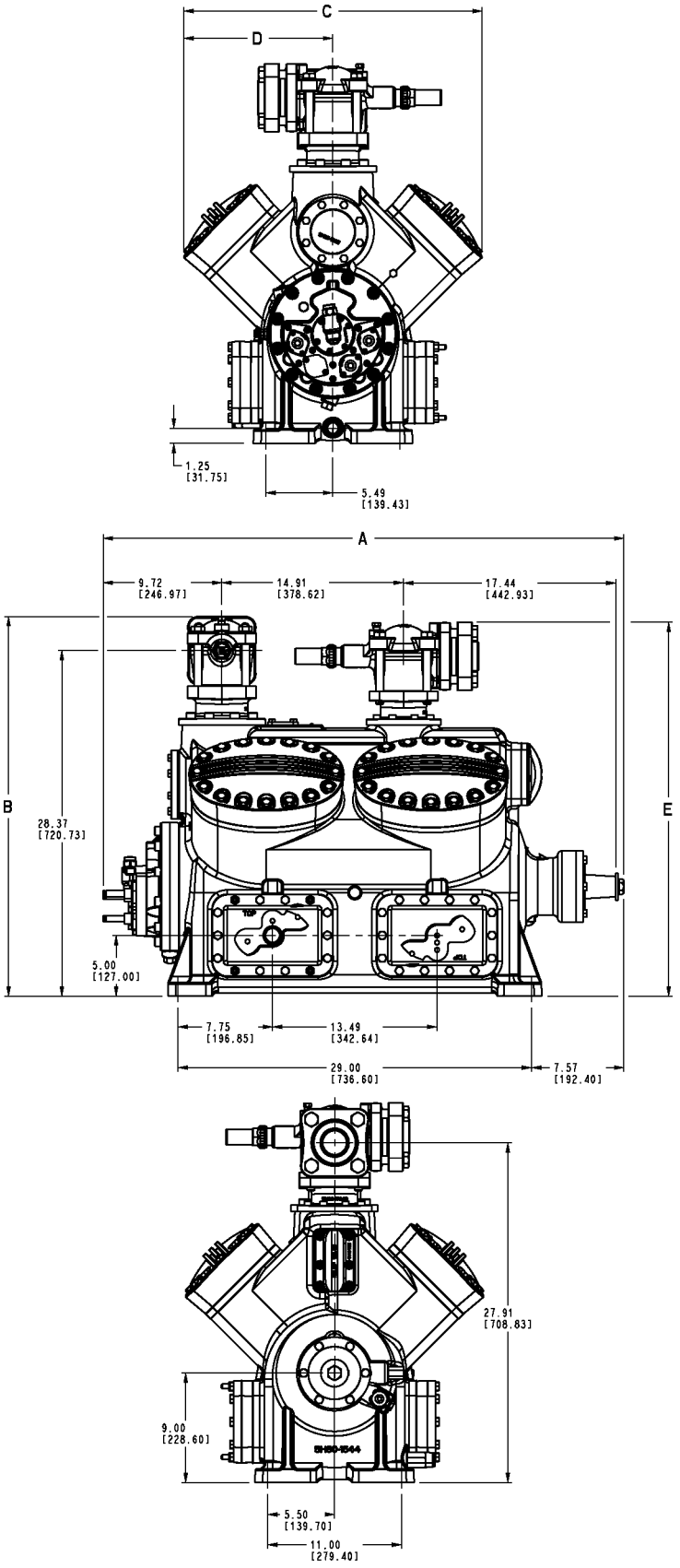

Fig. 39 — 5H81 Ammonia Model (cont)

© 2020 Carrier Corporation