Installation, Start-Up and Service Instructions

CONTENTS

Page

SAFETY CONSIDERATIONS 1
INSTALLATION 2
Step 1 — Prepare for Installation 2
Step 2 — Receive Compressor (Fig. 1-7) 2
Step 3 — Install Unit 13
Step 4 — Assemble Refrigerant Piping 13
Step 5 — Install Multiple Compressors 14
Step 6 — Check Compressor/Motor Alignment . . . 15
Step 7 — Assemble Water Piping 16
Step 8 — Prepare Lubrication System 16
PREPARE FOR INITIAL START-UP 16
Evacuate, Dehydrate and Leak Test 16
START-UP 16
Preliminary Steps 16
Start Compressor 17
High and Low-Pressure Switches 17
Check High-Pressure Switch 17
Check Low-Pressure Switch 17
Adjust Capacity Control (if required) 18
Capacity Control 18
Compressor Operating Limits 22
SCHEDULED MAINTENANCE 27
Check Lubrication System 27
Check Water-Cooled Heads 28
SERVICE 29
Service Notes 29
Lubrication System 29
5H120 and 126 Compressor Oil Pump History Reference 29
Pressure-Relief Valves 36
Suction Strainer 36
Cylinder Head and Valve Assemblies 36
Connecting Rods and Pistons 37
Capacity Control Operation 38
Capacity Control Inspection and Service 40
Crankshaft Inspection and Service 41
Pump-End Main Bearing (Fig. 52) 42
Center Main Bearing 43
Seal-End Main Bearing 43
Crankshaft Seal Inspection and Replacement 44
Accessories 44
TROUBLESHOOTING 47

SAFETY CONSIDERATIONS

Installation and servicing of air-conditioning equipment can be hazardous due to system pressure and electrical components. Only trained and qualified service personnel should install, repair, or service air-conditioning equipment.

Untrained personnel can perform basic maintenance functions of cleaning coils and filters and replacing filters. All other operations should be performed by trained service personnel. When working on air-conditioning equipment, observe precautions in the literature, tags and labels attached to the unit, and other safety precautions that may apply.

Follow all safety codes, including ANSI (American National Standards Institute) Z223.1. Wear safety glasses and work gloves. Use quenching cloth for unbrazing operations. Have fire extinguisher available for all brazing operations.

⚠ WARNING

Before performing service or maintenance operations on unit, turn off main power switch to unit. Electrical shock could cause personal injury.

⚠ WARNING

ELECTRIC SHOCK HAZARD
Do not operate compressor or provide electric power to it unless the compressor terminal box is installed and the terminal box cover is in place and secured.

⚠ WARNING

Do not provide power to unit or turn-on compressor unless suction and discharge service valves are open.

⚠ WARNING

ELECTRIC SHOCK HAZARD
Do not remove the compressor terminal box cover until all electrical sources have been disconnected.

⚠ WARNING

CONTENTS UNDER PRESSURE
Compressor contains oil and refrigerant under pressure. Pressure must be relieved before installation, servicing or opening any connections.

⚠ WARNING

RISK OF PERSONAL INJURY
HOT and COLD surface temperatures can occur during operation and can result in severe burns of frostbite.

⚠ WARNING

RISK OF PERSONAL INJURY
Only approved refrigerants and refrigeration oils may be used.

⚠ WARNING

Use nitrogen or inert gas for tightness/pressure testing. DO NOT USE oxygen or other industrial gases.

⚠ WARNING

System strength/tightness test pressure may not exceed the compressor maximum Proof Test pressure on the tag. Close shutoff valves to isolate compressor if necessary.

⚠ WARNING

Charge only with refrigerant that conforms to AHRI Standard 700.

⚠ CAUTION

This compressor shipped without oil. Do not run without adding required lubricant.

IMPORTANT: Install all safety decals/labels that come with the compressor.

INSTALLATION

Step 1 — Prepare for Installation

PREPARE EQUIPMENT ROOM

Locate compressor in a well ventilated area. If natural ventilation is inadequate, provide forced ventilation through ductwork. Check applicable code requirements.

Provide sufficient clearance for removal of compressor cylinder heads and valve plates. Allow space on the oil pump end for crankshaft removal as follows:

5F20, 30, 40, and 60 compressors ..... 20 in.
5H40, 41, 46, 60, 61, 66, and 81 compressors ..... 20 in.
5H80, 86, 120, and 126 compressors ..... 30 in.

PREPARE FOUNDATION

The 5F and 5H compressors may be fastened to:

- A steel base and vibration isolators on floor
- A steel base and condenser support stand
- A concrete base

In each case, the foundation must be of sufficient strength for the expected load and should be resistant to vibration.

Floor Foundations

Locate the unit over joists or beams wherever possible. Weak floors in old buildings must be reinforced with steel beams or timbers to support the heavy compressors or condensing units. Use care in placing supports to avoid the transmission of objectionable vibrations to other areas.

Concrete Foundations

The foundation weight should be 1 to 2 times the weight of the machinery it is to support in order to absorb vibration. Let the foundation set for approximately 3 days before installing compressor. Allow for $^{3}/_{8}$ - $^{1}/_{2}$ in. grout thickness after compressor has been installed.

Heavy aggregate concrete weighs about 150 pounds per cubic foot.

Step 2 — Receive Compressor (Fig. 1-7)

BEFORE UNLOADING

Check unit nameplates against model and serial numbers recorded in job specifications. Check all items against shipping list, and examine items carefully for any shipping damage. If damage is found or any major component has torn loose from its anchorage, have transportation inspectors examine it before unloading. File claim immediately with shipping company for any loss or damage.

RIG UNIT CAREFULLY

Check that rigging equipment can safely handle the approximate equipment weights for compressor units.

Rig and move unit carefully to prevent damage to mounting brackets, refrigerant piping or connections.

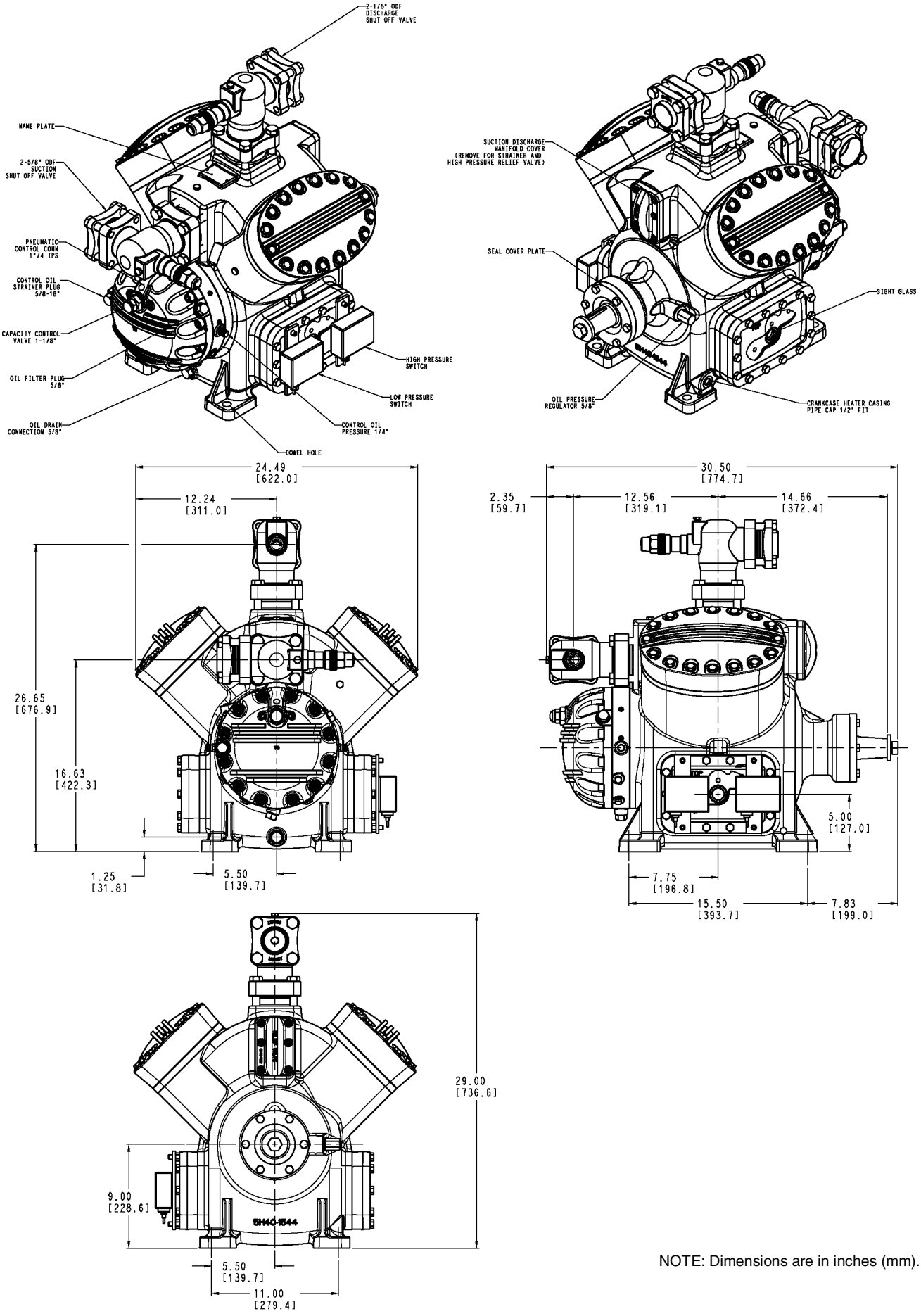

NOTE: Dimensions are in inches (mm).

Fig. 1 — 5H40, 46 4-Cylinder Compressors

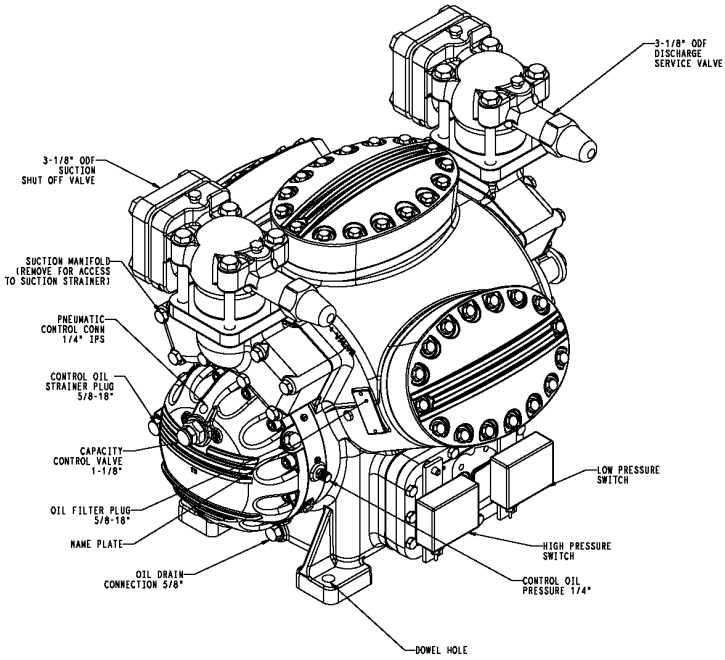

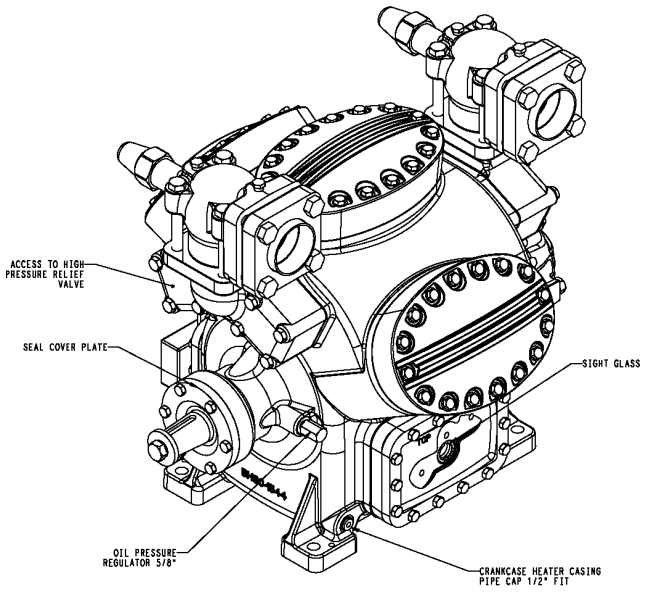

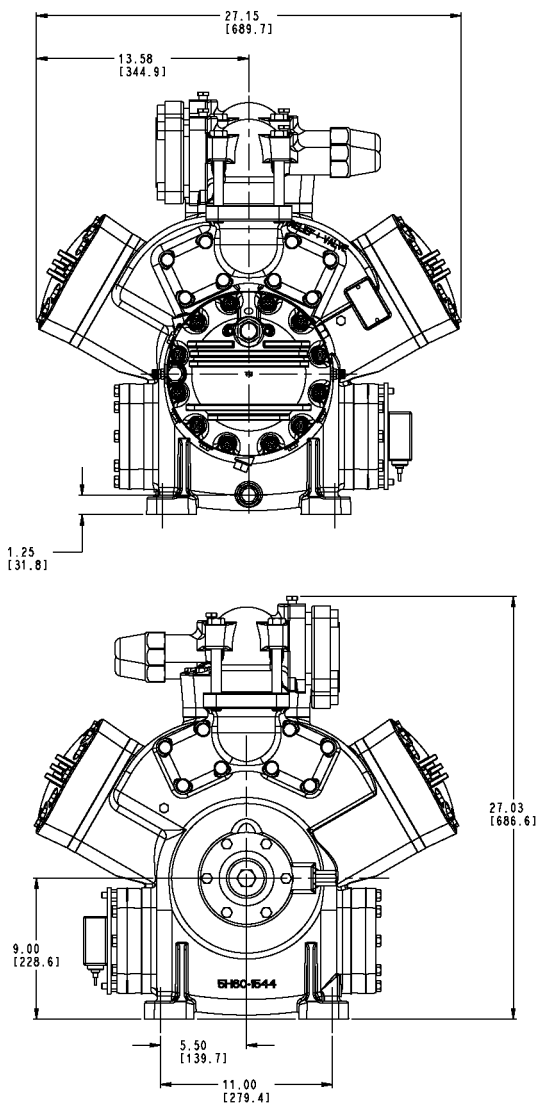

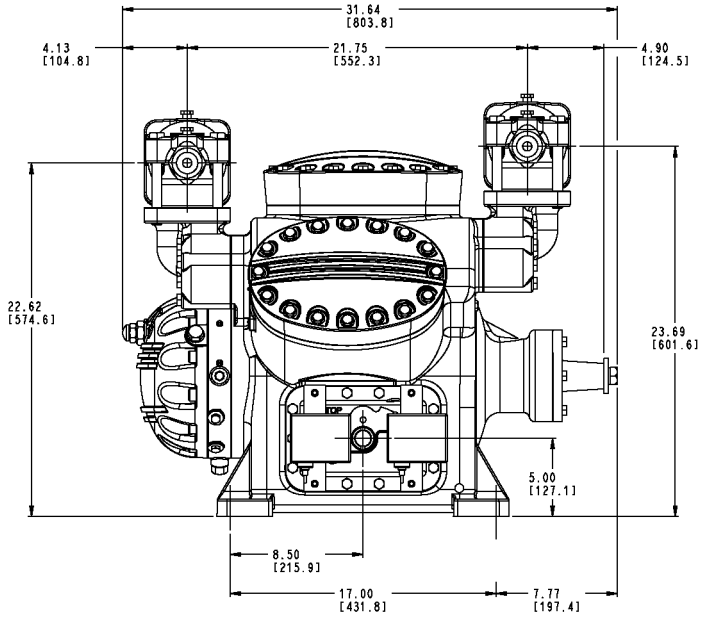

NOTE: Dimensions are in inches (mm).

Fig. 2 — 5H60, 66 6-Cylinder Compressors

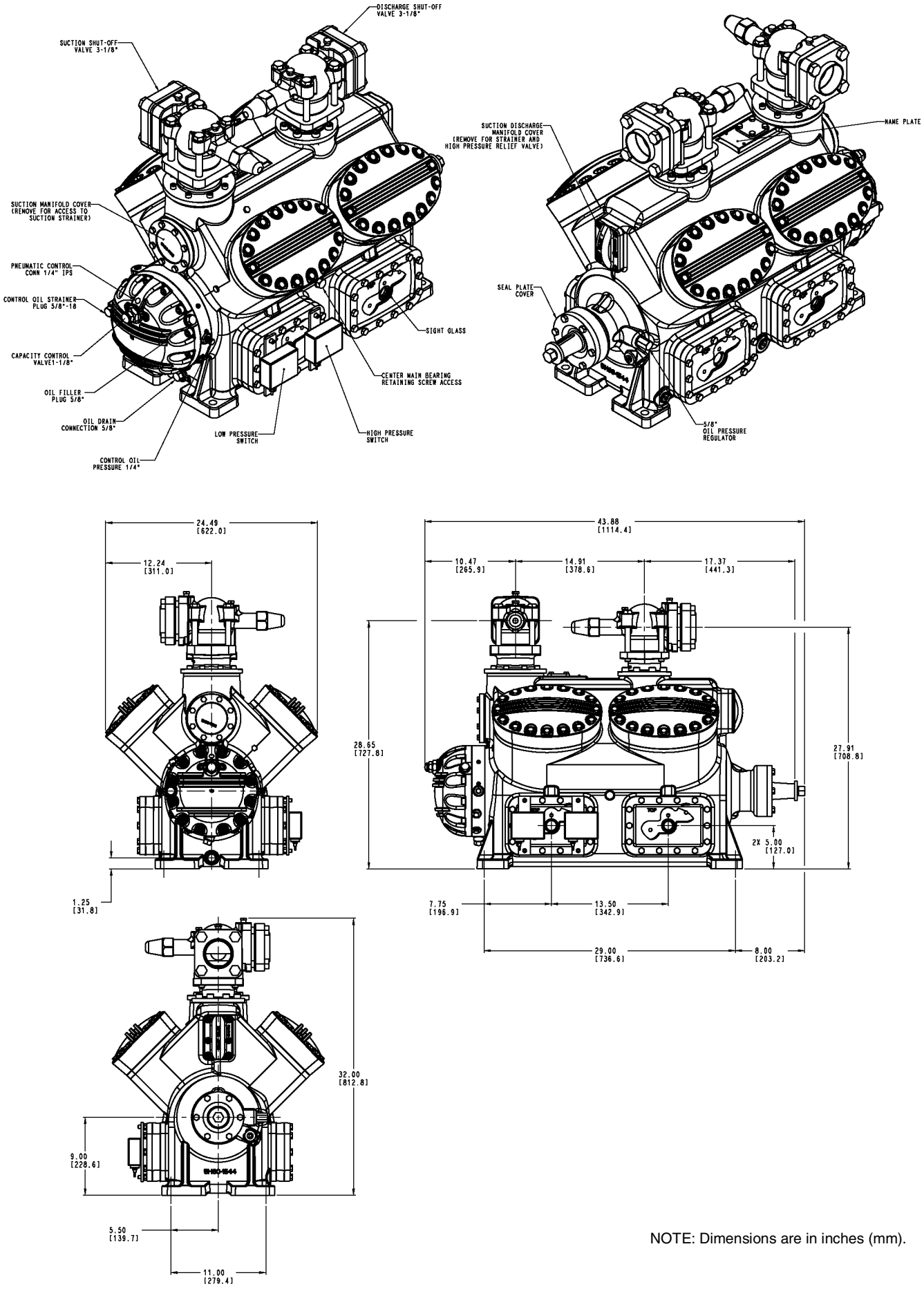

NOTE: Dimensions are in inches (mm).

Fig. 3 — 5H80, 86 8-Cylinder Compressors

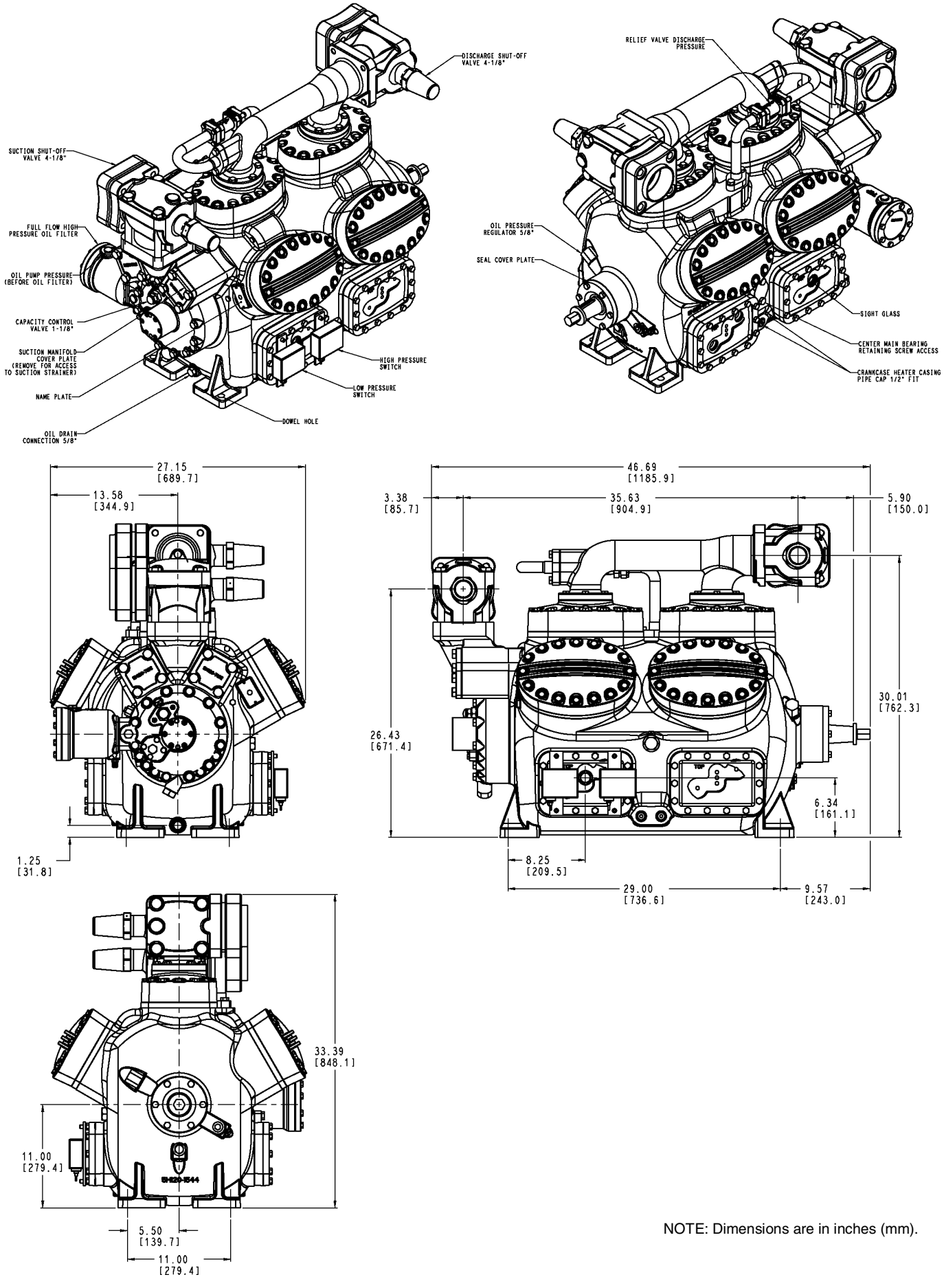

NOTE: Dimensions are in inches (mm).

Fig. 4 — 5H120, 126 12-Cylinder Compressors

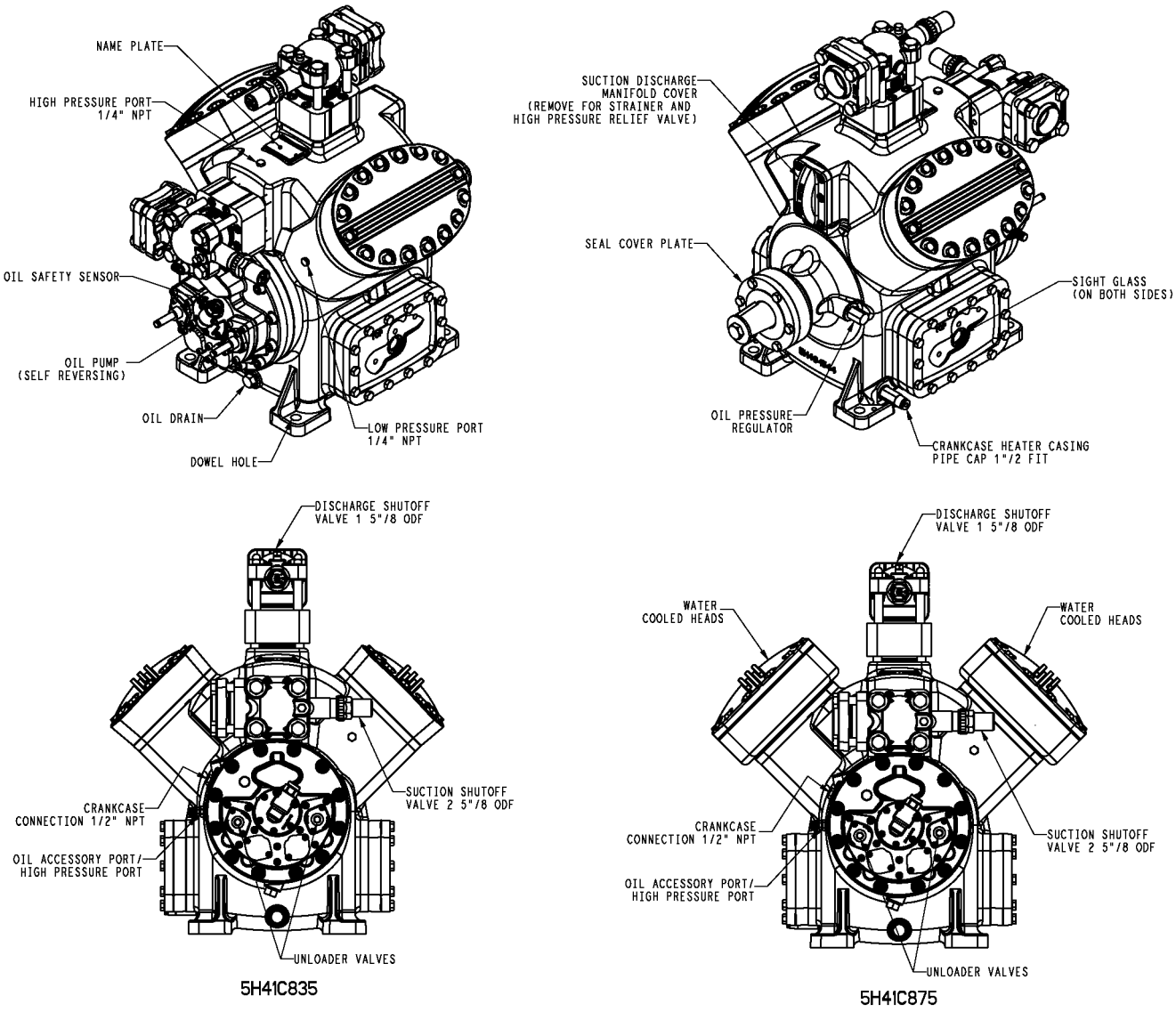

NOTE: Dimensions are in inches (mm).

Fig. 5 — 5H41 Ammonia Model

MODEL NO.	A	B	C	D
5H41C835D	30.04 [762.95]	28.32 [719.22]	24.49 [621.98]	12.24 [310.96]
5H41C875D	30.04 [762.95]	28.32 [719.26]	27.58 [700.51]	13.81 [350.66]
5H41C895D	27.65 [702.34]	22.18 [563.25]	24.49 [621.98]	12.24 [310.96]
5H41C905D	27.65 [702.33]	22.78 [578.66]	27.58 [700.51]	13.81 [350.66]

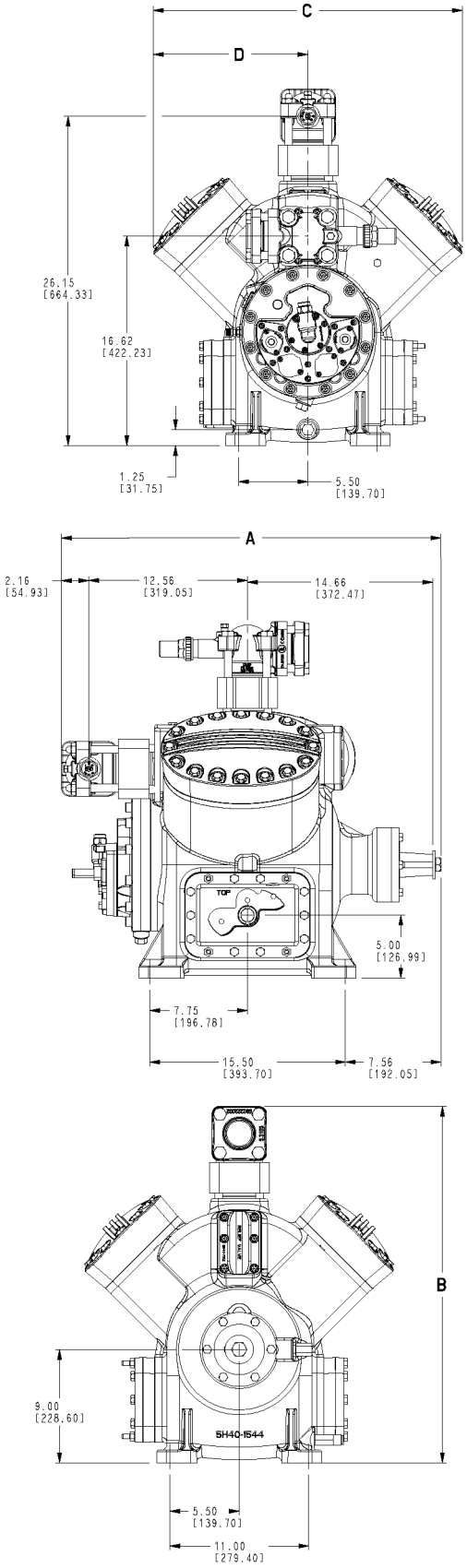

NOTE: Dimensions are in inches (mm).

Fig. 5 — 5H41 Ammonia Model (cont)

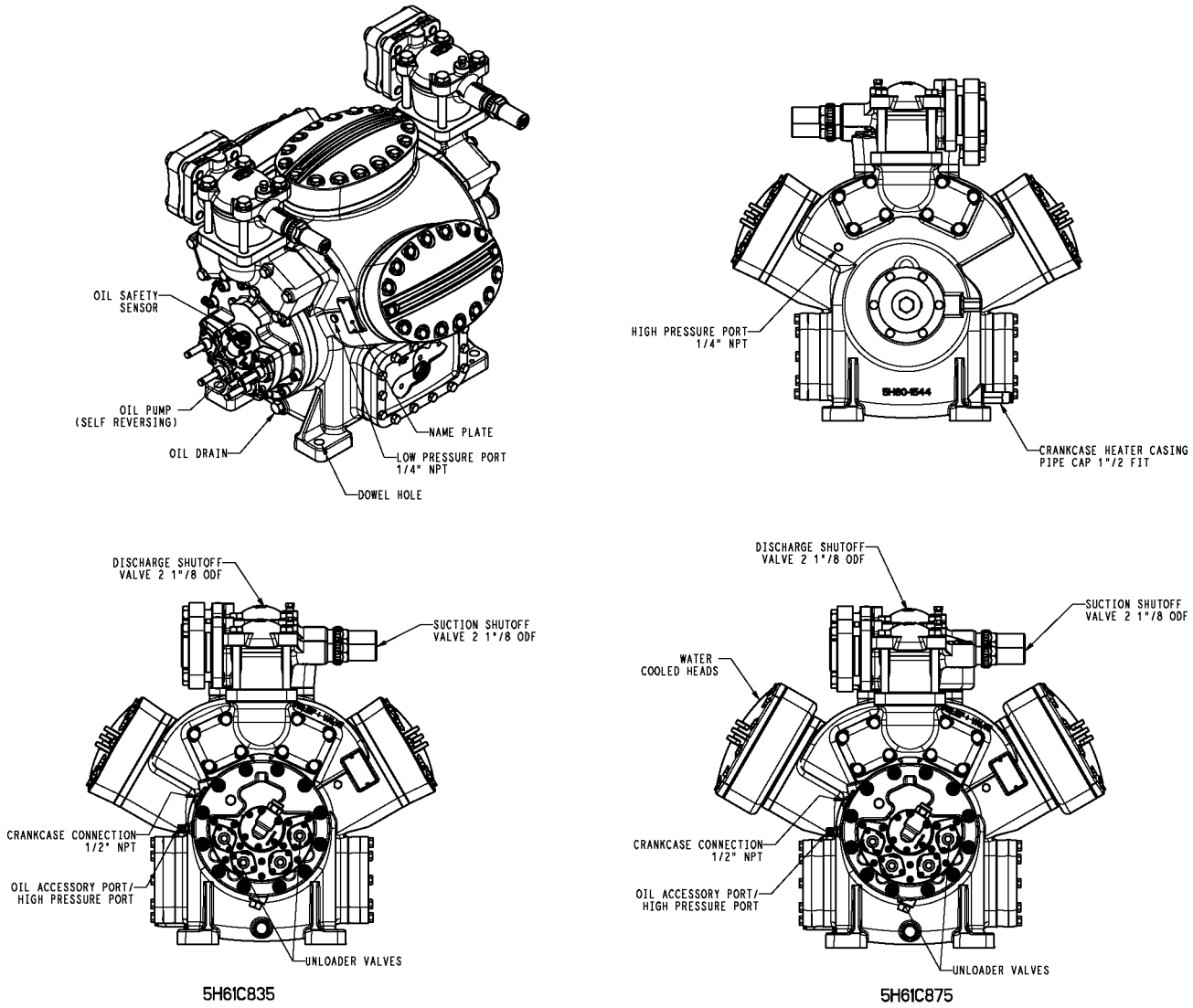

NOTE: Dimensions are in inches (mm).

Fig. 6 — 5H61 Ammonia Model

MODEL NO.	A	B	C	D	E
5H61C835D	30.70 [779.76]	26.51 [673.44]	25.45 [646.39	27.15 [689.72]	27.15 [689.72]
5H61C875D	30.70 [779.76]	26.51 [673.44]	25.45 [646.39	30.33 [770.35]	30.25 [768.32]
5H61C895D	32.81 [833.30]	23.42 [594.88]	—	27.15 [689.72]	27.15 [689.72]
5H61C905D	32.81 [833.30]	24.92 [633.06]	—	30.33 [770.35]	30.25 [768.32]

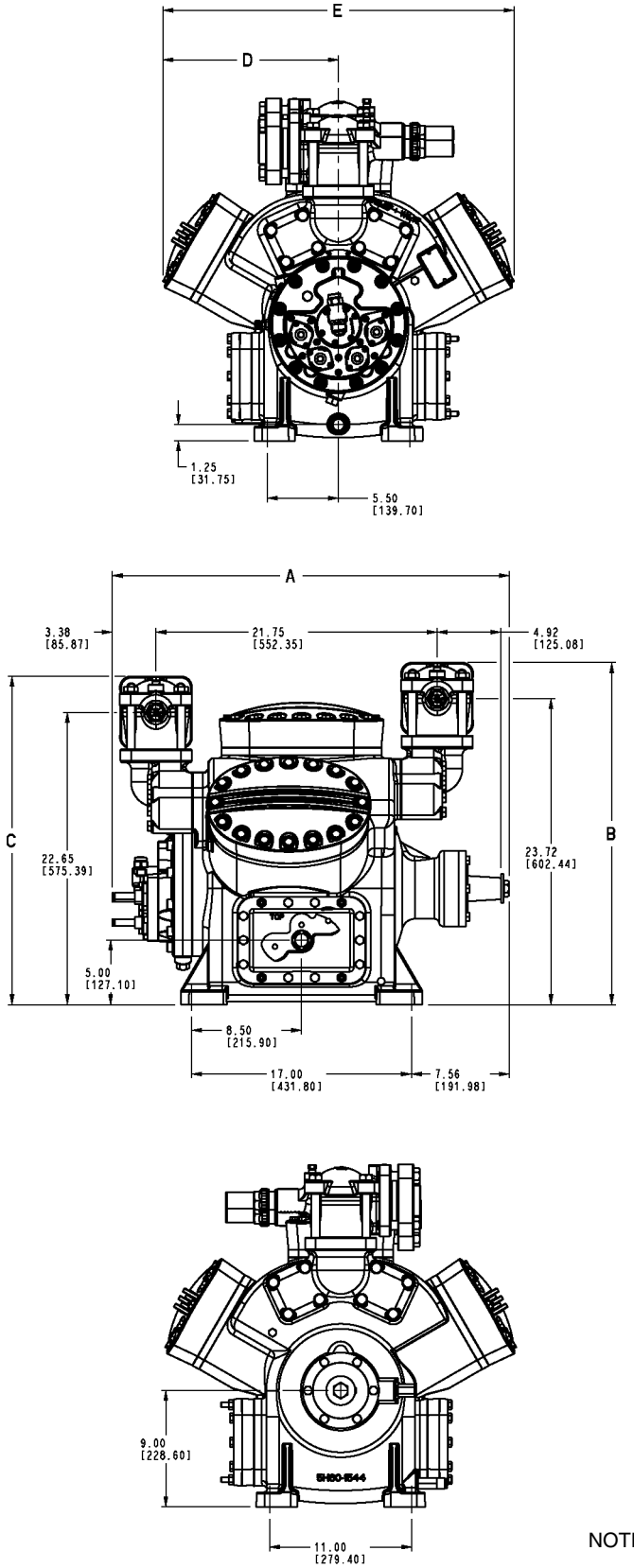

NOTE: Dimensions are in inches (mm).

Fig. 6 — 5H61 Ammonia Model (cont)

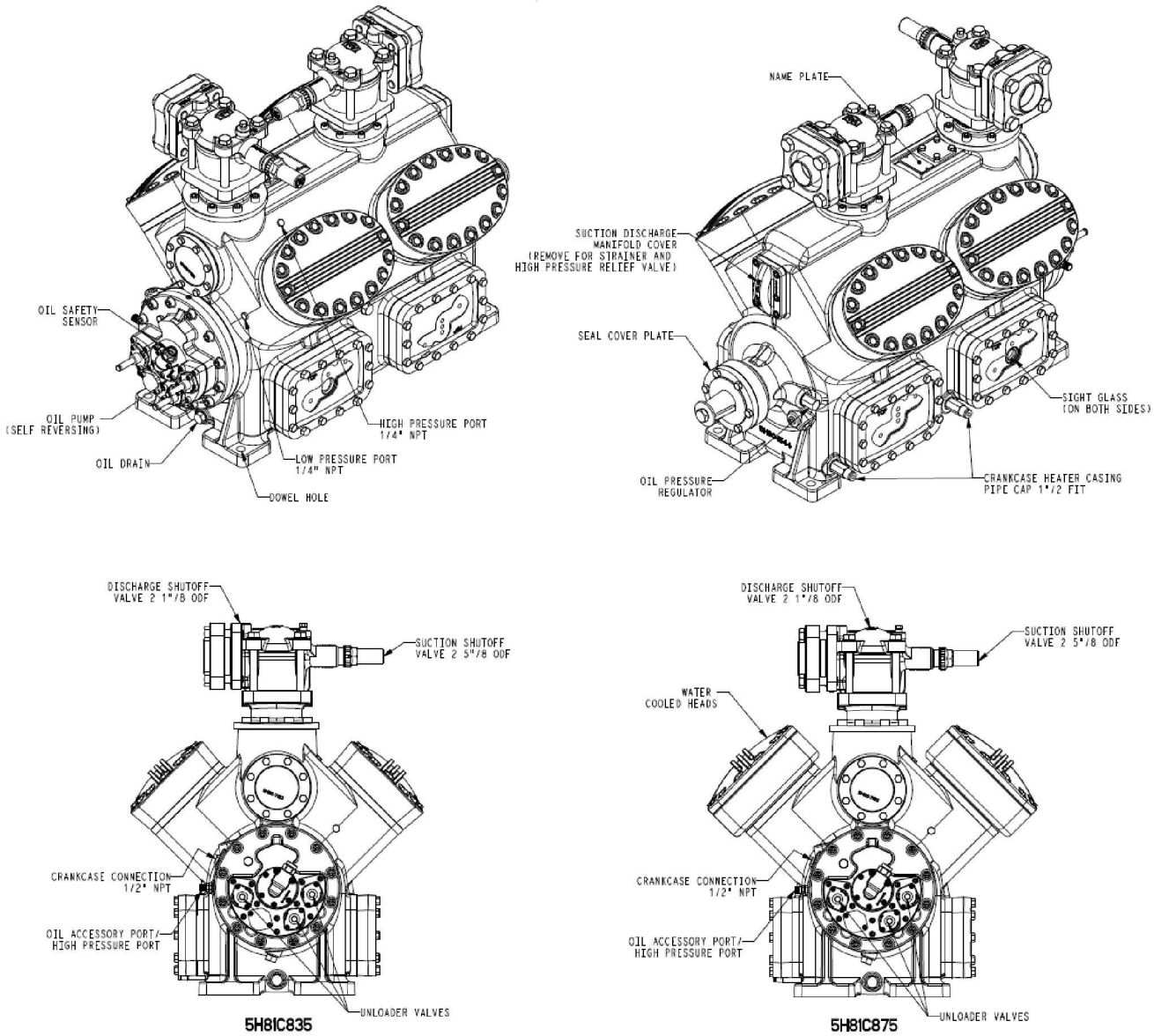

NOTE: Dimensions are in inches (mm).

Fig. 7 — 5H81 Ammonia Model

MODEL NO.	A	B	C	D	E
5H81C835D	42.72 [1084.99]	31.17 [791.72]	24.49 [622.12]	12.25 [311.06]	30.70 [779.96]
5H81C875D	42.72 [1084.99]	31.17 [791.72]	27.67 [702.73]	13.83 [351.37]	30.70 [779.96]
5H81C895D	41.16 [1045.51]	23.38 [593.93]	24.49 [622.12]	12.25 [311.06]	—
5H81C905D	41.16 [1045.51]	23.38 [593.93]	27.67 [702.73]	13.83 [351.37]	—

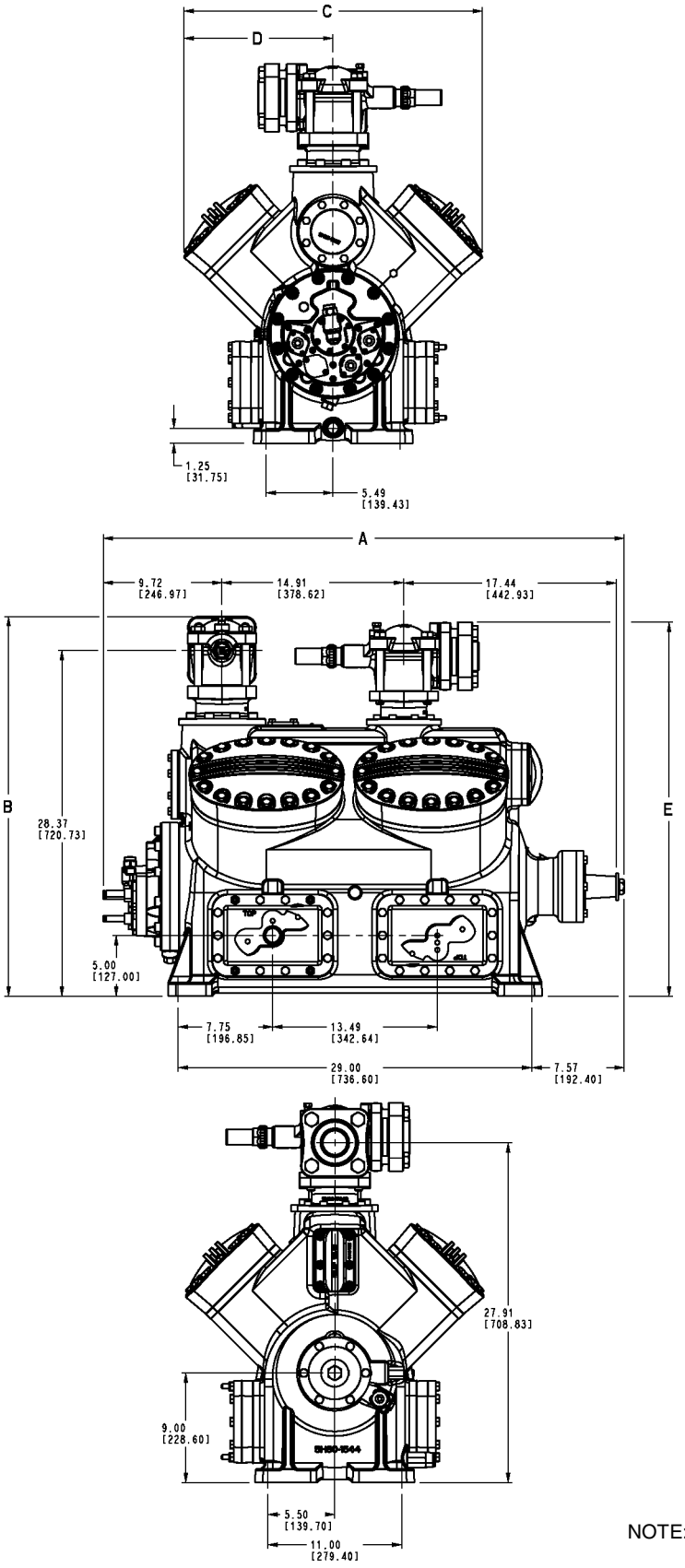

NOTE: Dimensions are in inches (mm).

Fig. 7 — 5H81 Ammonia Model (cont)

Step 3 — Install Unit

TO MOUNT MOTOR ON BASE

The motor fastening set, available as an accessory for all 5F,H base-mounted compressors, includes motor blocks and shims for motor alignment; cap screws, plate washers and lock washers for fastening motor to base; taper dowel pins for securing motor position after alignment; and beveled washers for fastening the unit base to accessory vibration isolators.

If vibration isolators are used, attach to base (Fig. 8). To avoid damaging the isolators, lift unit from ends when attaching isolators.

With compressor and motor positioned on the base, check the height of the vibration isolators. Shim between isolators and floor as required to level compressor base. When level, secure vibration isolators to floor. Check that bevel washer (Fig. 8) is in place.

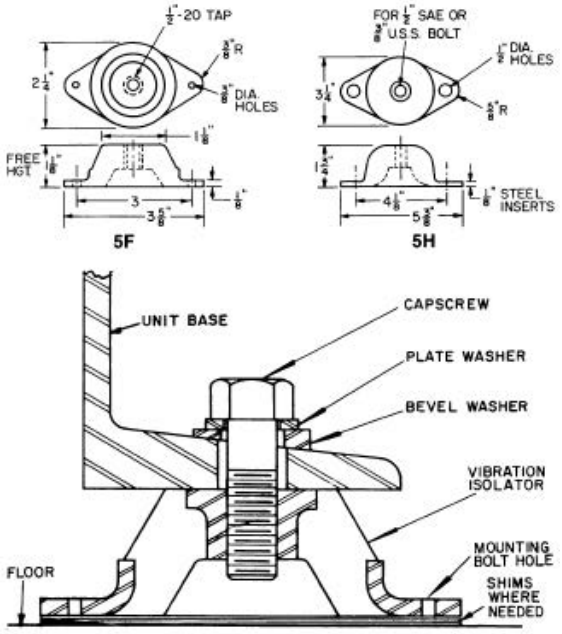

Fig. 8 — Typical Vibration Isolator Mounting

Step 4 — Assemble Refrigerant Piping

Refrigerant connection sizes are given in Table 1.

COMPRESSOR PIPING

- Provide economical line sizes without excessive pressure drop, but maintain adequate refrigerant velocities, at all capacity steps, to promote oil return.
- Protect the compressor by preventing excessive lubricating oil from being trapped in the system.
- Prevent liquid refrigerant from entering the compressor during operation and shutdown.

REFRIGERANT DRIER

A replaceable-core filter drier is recommended for most systems, and is essential on all low-temperature systems. Mount the field-supplied filter drier in the liquid line. Include a shutoff valve to permit isolation of drier for servicing (Fig. 9).

Install a moisture indicator on downstream side of drier to indicate when drier cartridges need replacing.

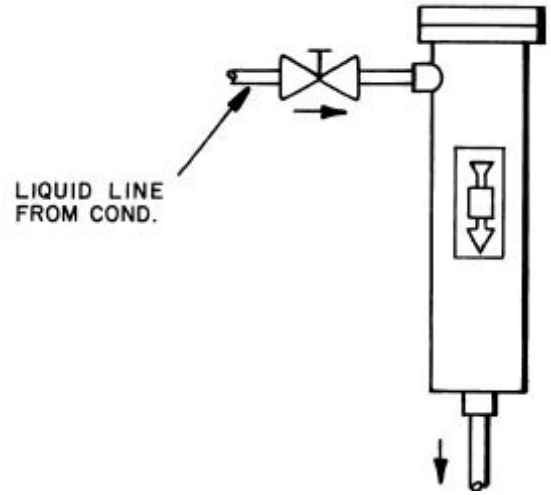

Fig. 9 — Refrigerant Filter Drier and Shutoff Valve Arrangement

Table 1 — Physical Data (HFC Refrigerants)

COMPRESSOR MODEL		5F20	5F30	5F40	5F60	5H40	5H46	5H60	5H66	5H80	5H86	5H120	5H126
Nominal Horsepower	R-134a/R-407C	5	7 1/2	10	15	25	40	40	50	50	75	75	100
	R-22	10	15	20	25	40	60	60	75	75	100	125	150
	R-507/404A/448A/449A	10	15	20	25	40	60	60	75	75	100	125	150
Number of Cylinders		2	3	4	6	4	4	6	6	8	8	12	12
Bore (in.)		2 1/2	2 1/2	2 1/2	2 1/2	3 1/4	3 1/4	3 1/4	3 1/4	3 1/4	3 1/4	3 1/4	3 1/4
Stroke (in.)		2	2	2	2	2 3/4	3 7/16	2 3/4	3 7/16	2 3/4	3 7/16	2 3/4	3 7/16
Displacement Cfm at 1750 Rpm		19.8	29.8	39.8	59.6	92.4	115.5	138.4	173.0	184.7	231.0	276.8	346.0
Ratings in Tons*	R-134a/R-407C	5.2	7.8	10.5	15.7	24.7	30.6	37.0	45.9	49.5	61.1	74.0	91.8
	R-22	8.5	12.7	16.8	25.3	39.6	49.1	59.4	73.8	79.2	98.2	119.0	145.0
	R-507/404A, R-448A/R-449A	8.4	12.6	16.8	25.2	38.5	47.7	57.7	71.6	77.0	95.5	115.5	143.2
Max Speed (rpm)		1750	1750	1750	1750	1750	1750	1750	1750	1750	1750	1750	1750
Min Speed (rpm)	For Lubrication	400	400	400	400	400	400	400	400	400	400	400	400
	For Unloader Action	600	700	800	900	800	800	900	900	1100	1100	900	900
Net Oil Pressure (psig)†		45	45	45	45	45	45	45	45	45	45	45	45
Oil Charge (pt)		5	5 1/2	12	13	18	18	21	21	41	41	61	61
Normal Oil Level in Sight Glass		C.L.	C.L.	3/8" Above C.L.	3/8" Above C.L.	C.L.	C.L.	C.L.	C.L.	C.L.	C.L.	C.L.	C.L.
Min Oil Pressure for Unloader Action (psig)		22	28	35	35	35	35	35	35	35	35	35	35
Suction Line ODF (in.)		1 1/8	1 5/8	1 5/8	2 1/8	2 5/8	2 5/8	3 1/8	3 1/8	3 1/8	3 1/8	4 1/8	4 1/8
Discharge Line ODF (in.)		7/8	1 3/8	1 3/8	1 5/8	2 1/8	2 1/8	3 1/8	3 1/8	3 1/8	3 1/8	4 1/8	4 1/8
Bare Compressor Weight (lb)		175	215	355	400	610	610	795	795	1115	1115	1580	1580

LEGEND

C.L. — Center Line
ODF — Outside Diameter Female (in.)

* 40°F saturated suction, 105°F saturated discharge, 15°F superheat, 0°F subcooling.

† Net oil pressure = oil pressure gage reading – suction pressure. The above oil pressure is typical with mineral or alkylbenzene oils. A slight increase in oil pressure may result with the use of Polyolester (POE) oil.

FELT FILTERS

Install felt filter supplied with compressor in suction strainer (Fig. 1-7). Remove filter after 50 hours of operation. If clean, discard it; if dirty, clean with kerosene or neutral spirits and insert for another 50 hours of operation. Tag unit to show date that filter was cleaned and reinstalled. See Table 2 for information on replacement filter packages.

Table 2 — Suction (Felt) Filter Packages

COMPRESSOR	FILTER PACKAGE PART NO.
5F40	5F40-A352
5F60	5F60-A352
5H40,46	5H40-A382
5H60,66	5H60-A382
5H80,86	5H80-A382
5H120,126	5H120-A382

Step 5 — Install Multiple Compressors

EQUALIZING LINES

Compressors operating in parallel require interconnecting lines for oil and gas pressure equalization. Special handhole cover plates, equipped with tapped holes for equalizing lines, are available as options for sizes 5F40 and 5F60, as well as for sizes 5H40 through 86 compressors (Fig. 10). An oil float system is an acceptable alternative to equalizer lines.

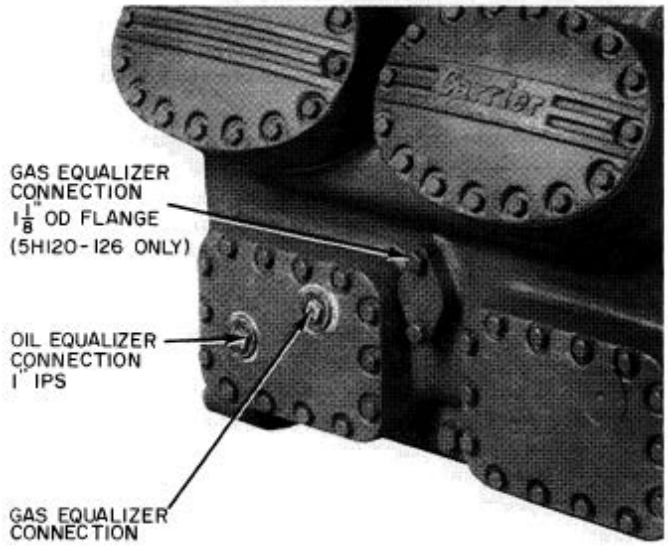

Fig. 10 — Special Hand-Hole Cover and Equalizer Connections (Typical)

5H120 and 126 Compressors include factory-supplied, tapped cover plate. On these compressors, use only lower connection for oil equalization (Fig. 10). Connect gas equalizing line to flange connection shown. Mating flange for $1^1/_8$-in. line is Mueller Part No. A-5151; gasket Part No. is Mueller Part No. A-5152.

5F20 and 30 Compressors have no special tapped cover plate. Use opening for oil sight glass to attach the $1^1/_8$-in. line for gas and oil equalization (Fig. 11). Accessory Package No. 06DA900072 provides two $^1/_8$-in. line adapters to thread into the sight glass opening. If additional equalization is desired, run a $^3/_8$-in. line to the oil-filter plug connection (Fig. 1 and 3).

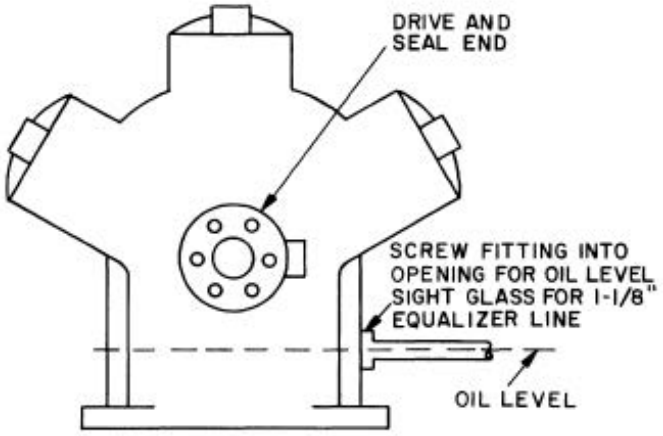

Fig. 11 — Equalizer Connections (5F20 and 30)

APPROVED REFRIGERANTS

Compressor models 5F20-5F60 and 5H40-5H126 are approved for the following refrigerants: R-134a, R-404A, R-507, R-407A, R-407C, R-407F, R-448A, R-449A, and R-22. See Table 1.

Ammonia compressor models 5H41, 5H61, and 5H81 are approved for R-717. See Tables 3 and 4.

Table 3 — 5H Ammonia Compressor Models

5H AMMONIA COMPRESSOR MODELS									
5H41	**5H61**	**5H81**	**MODEL NOMENCLATURE**	**CAPACITY CONTROL**	**UNLOADER ELEMENTS INSTALLED**	**SERVICE VALVES**	**WATER-COOLED HEADS**	**OPSS**	**HI/LOW PRESSURE SWITCHES**
X	X	X	- C835	Electric Unloading	Yes	Yes	No	Yes	No
X	X	X	- C875				Yes		
X	X	X	- C915	Low Torque Start (No Unloading)			No		
X	X	X	- C925				Yes		
X	X	X	- C935	(VFD) No Unloading	No		No		
X	X	X	- C945				Yes		

Example: 5H61-C875 model number is a compressor configured with Electric Unloading, Service Valves, Water Cooled Heads, and OPSS oil safety sensor.

VFD compressor models will start fully loaded. VFD range is 30 Hz to 60 Hz.

Table 4 — Physical Data (Ammonia R-717)

COMPRESSOR MODEL	AMMONIA	5H41	5H61	5H81
Nominal HP	—	25	40	50
Number of Cylinders	—	4	6	8
Unloading Cylinders	Standard	2	4	5
Suction Service valve	Standard	2 1/8"	2 1/8"	2 5/8"
Discharge Service Valve	Standard	1 5/8"	2 1/8"	2 1/8"
Oil Pressure Safety	Standard	Yes		
Maximum Speed (rpm)	Single High Stage	1275	1275	1275
	Low Stage Booster	1600	1600	1600
Displacement at 1275 rpm	CFM	67	101	135
Displacement at 1600 rpm		85	127	169
Minimum Speed (rpm)	For Unloading	800	900	900
	For Lubrication	400	400	400
Recommend Net Oil DP Pressure	psid	45	45	45
Recommend Oil Type CAMCO 717-HT	Pint	20	24	45
Weight (water cooled heads)	lbs	715	965	1340

ATTACH POWER WIRES TO COMPRESSOR MOTOR

Attach power wires in accordance with motor manufacturer's instructions and in compliance with NEC and applicable local codes.

CHECK MOTOR ROTATION

Before connecting motor to compressor, check direction of motor rotation. *Rotation must be in same direction as that indicated by arrow on compressor pump cover (or on plate attached near pump-end bearing housing).* If direction is not the same, reverse motor rotation by reversing any 2 power leads to motor.

If rotation of oil pump is reversed, reverse direction of pump rotation arrow as well. At that time make the following adjustments:

All 5F Compressors

Remove 6 cap screws from oil pump cover. Do not damage gasket. Rotate cover 180 degrees and replace. Arrow at top of oil cover will indicate new direction of rotation.

5H40 through 86 Compressors

Drain oil below level of pump-end cover (Fig. 1-7). Remove pump-end cover to expose oil pump cover in center of main bearing housing. Rotate oil pump cover 180 degrees and replace it. Replace pump end cover and reverse external arrow to match new direction of rotation. Proper direction can later be checked without removing pump-end cover.

5H120 and 126 Compressors (Beginning SIN 1086J---)

Supplied with automatically reversing oil pump, eliminating need for adjustment. For 5H120 and 126 models built before SIN 1086J---, follow same adjustment procedure outlined for 5F compressors.

⚠CAUTION

If the special gasket between oil pump cover and oil pump is damaged, replace with correct gasket only. Check oil pressure immediately after starting compressor.

INSTALL CRANKCASE HEATER

Wire heater to relay or set of normally closed auxiliary contacts on compressor starter to de-energize it when compressor is operating.

Remove rubber plug from crankcase heater casing (Fig. 1-7), and insert heater element entirely into casing. Element should fit snugly, not loosely. Wire to comply with applicable electrical codes.

When crankcase heater is installed, system can be operated on single pumpout cycle, unless used with a DX cooler.

Table 5 lists crankcase heater packages. Table 6 shows corresponding relays. Use of 2 heaters on a 5H80 through 126 compressor requires only one relay.

Control circuit voltage determines relay coil voltage. This voltage must be specified when ordering relays.

See Accessory Compressor Crankcase Heater Installation Instructions for additional information.

Table 5 — 5F,H Compressor Crankcase Heater Package

COMPRESSOR	ELECTRICAL CHARACTERISTICS		PACKAGE NO.
	Volts	Watts	
5F20,30,40,60	115	100	-5-F--20---381
	230	100	-5-F--20---391
5H40,46,60,66	115	200	-5-H--40---381
	230	200	-5-H--40---391
5H80,86,120,126	115	200	(2) 5H40-381
	230	200	(2) 5H40-391

Table 6 — Crankcase Heater Relay (60 Hz)

CONTROL CIRCUIT VOLTAGE	PART NO.
115	HN61AJ-101
208/230	HN61AJ-108

Step 6 — Check Compressor/Motor Alignment

BELT DRIVE

See Accessory Belt Drive Package manual for installation and alignment instructions.

DIRECT DRIVE

Install and align compressor, coupling and motor as described in manual for Flexible Couplings for Direct-Drive Units.

HOT CHECK AND DOWELING

To help maintain alignment, and to ensure exact repositioning of the motor after servicing, the motor and compressor must be doweled to the base. *Install doweling only after motor/compressor alignment has been hot checked (checked after the compressor has warmed up to operating temperature after initial alignment).*

After hot check and while components are still at operating temperature, drill and ream 2 holes through diagonally opposite motor and compressor feet and the base. Use a 9/32-in. drill and a no. 6 taper reamer. Secure the motor and compressor to the base with the no. 6 x 2 1/2-in. taper dowel pins provided in the motor fastening set.

Coat the dowels with white lead or other lubricant to prevent rusting, and tap the dowel lightly into position so that 1/16 of taper is left above the motor foot.

Check that all dowels are tight and that they do not bottom.

Step 7 — Assemble Water Piping

For compressor's using water-cooled cylinder heads (WCH), following the instructions associated in the accessory kits 5H660009, 5H660010, and 5H660011 for water-cooled heads and water-cooled hose kits.

Step 8 — Prepare Lubrication System

INSTALL OPTIONAL EQUIPMENT

Consult local Carlyle representative for information on these accessories.

Oil Filter

Oil filter for 5H40 through 86 compressors is available as separate accessory package. Refer to Accessory Oil Filter Package Installation Instructions for installation procedures.

If an accessory oil cooler is also installed (see below), pipe oil filter into system as shown on diagrams in Accessory Oil Cooler Installation Instructions.

Oil Cooler

Refer to Accessory Oil Cooler Installation Instructions included with this accessory package. Adjust water flow rate through oil cooler to maintain 100 to 120°F oil temperature returning to compressor. See Scheduled Maintenance, page 27.

Oil Separator

If oil separator is used in system piping, pipe oil return line to compressor suction line. To minimize possibility of flooding compressor with oil, oil return line diameter should not exceed 1/4 inch. In addition, line should have manual shutoff valve to throttle oil flow as required and to isolate separator for service.

CHECK OIL LEVEL

Check that oil level is visible at center of compressor sight glass. Compressors that use optional equipment such as filter, cooler, and oil separator described above will require a greater oil charge than listed in Tables 1 and 4 on pages 13 and 15. Recheck oil level after operating compressor.

APPROVED OILS

For HFCs

Carlyle has approved the following UL listed refrigerants **R-134a, R-404A, R-407A, R-407C, R-407F, R-448A, R-449A, R-450A, R-452A, R-507 and R-513A** for use in 5F and 5H compressors.

The following POLYOL-ESTER (POE) are approved oils for HFCs:

Totaline® (see note 5)	P903-1001, 1701
Castrol (see Note 5)	E68
ICI Emkarate	RL68H
CPI	CP-2916S
CPI	Solest 68
BP Marine Enersyn	MP-S68

All POE oils are very hygroscopic (will readily pick up and retain mosture from the air) and should be used completely once the container is opened. It is extremely difficult to reseal the oil container effectively enough to prevent moisture absorption, which in turn forms damaging acids.

NOTES:

1. The use of any non-approved refrigerant may be dangerous and may void the warranty. Contact the Carlyle Compressor engineering department before using any refrigerant or oil not listed in this guide as approved for use in a Carlyle semi-hermitic compresor.
2. Using the wrong type or weight of oil for the refrigerant selected will void the warranty.
3. Follow the refrigerant and/or oil manufacturer instructions when installing or retrofitting.
4. Castrol SW68 (Totaline® P903-1001) is approved for use in Carrier chiller applications as well as Carrier and Carlyle semi-hermetic compressors for air conditioning and medium temperature applications. **Castrol SW68 (Totaline® P903-1001) cannot be used in any new low temperature refrigeration applications using Carlyle OEM semi-hermetic compressors. Castrol E68 is approved for use in Carlyle OEM compressors for low, medium, and high temperature ranges.**
5. All HFC/POE applications require a crankcase heater.
6. Moisture must be kept below 50 ppm for POE oils.
7. In retrofit applications, a high flow oil pump is required.

For HFCs not listed above, please contact Carlyle Engineering for oil recommendations.

For Ammonia

AMMONIA R-717: CAMCO-717-H Oil — 5H41, 5H61, and 5H81

For CFCs

Carlyle has historically approved the following UL listed refrigerants R-22, R-500, and R-502 for use in 5F and 5H compressors.

The following MINERAL/ALKYLBENZINE are approved oils for CFCs:

Totaline®	P903-2001
Witco	Suniso 3GS
Shrieve Chemical	Zerol 150
Texaco Capella	WFI-32-150
IGI Petroleum Ind	CRYOL-150

NOTE: For CFCs not listed above, please contact Carlyle Engineering for oil recommendations.

PREPARE FOR INITIAL START-UP

Evacuate, Dehydrate and Leak Test

Evacuate, dehydrate and leak test the entire refrigerant system as described in Carlyle Standard Service Techniques Manual, Chapter 1, Sections 1-6 and 1-7.

LEAK TESTING

Preferred Method

Charge the system to 10 psig with refrigerant. Add dry nitrogen or dry air (DO NOT USE OXYGEN) until system pressure is 150 psig. Check for leaks with a halide or electronic leak detector.

Alternate Method

Charge the system with dry nitrogen or dry air (DO NOT USE OXYGEN) to 40 psig and use soap-bubble test to find large leaks.

⚠ CAUTION

Do not use compressor to build up pressure. Do not overcharge the system.

START-UP

Preliminary Steps

1. Energize crankcase heater for at least 24 hours before starting unit.
2. If control transformer is not used, operate electrical control circuit with main power switch OFF to ensure that field connections have been properly made.

3. Install felt sock filter for the first 50 hours of compressor operation. Remove and inspect the filter, clean it if required and replace it for another 50 hours. Remove sock when system is clean. (Not applicable for 5F20 and 5F30 units.)
4. Check that motor rotates in direction that the arrow on the compressor oil pump cover indicates. Refer to Installation, Check Motor Rotation section on page 15.
5. Check that oil fills $^1/_3$ to $^1/_2$ of the compressor sight glass.
6. Open water supply valve to condenser. Open pressure line valve of water-regulating valve (if used). If compressor unit is equipped with air-cooled condenser, tum on condenser fan.
7. Backseat (open) compressor suction and discharge service valves. Open liquid line valve at receiver.
8. Start evaporator fan or chilled water pump.

Start Compressor

Close main power switch supplying current to the compressor motor.

Immediately recheck oil level and check oil pressure. Pressure should exceed suction pressure by 45 to 55 psi. *If correct pressure is not reached in 10 to 12 seconds, stop compressor immediately and check oil pump.*

⚠CAUTION

If any safety device shuts down the compressor, do not reset the control more than once before determining cause of shutdown.

High and Low-Pressure Switches

Some 5F and 5H units except 5F20 and 30 have factory-installed, automatic reset, high and low-pressure switches. (These switches are available as accessories for 5F20 and 30 units.) Figure 12 illustrates adjustment procedures for both switches.

Check High-Pressure Switch

Throttle the condenser water on water-cooled unit or block the airflow on air-cooled unit, allowing head pressure to rise gradually. Compressor should shut off within 15 psi of cutout value. Now reverse procedure; compressor should start within 10 psi of cut-in value given.

Check Low-Pressure Switch

Slowly close the suction service valve; suction pressure will decrease. Compressor should shut off within 4 psi of cutout value. Reverse procedure; compressor should start within 6 psi of cut-in value given.

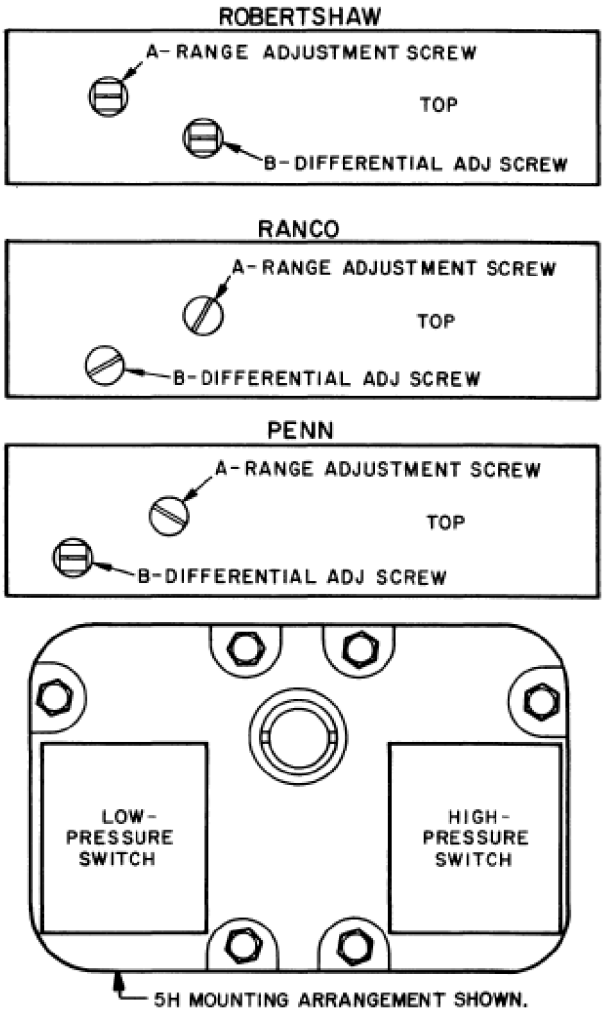

Fig. 12 — High and Low-Pressure Switches

OIL PRESSURE SAFETY SWITCH (OPSS)

Carlyle has approved the following oil pressure safety switch with the 5H ammonia compressors. The OPSS will mount directly to the oil pump bearing end of the compressor. All 5H ammonia compressors will have the OPSS stainless steel sensor (P/N 5H41-7602) installed and leak tested at the factory (see Fig. 13). The electronic oil safety switch (P/N 06DA509570) is provided as an accessory item that is installed by the OEM. The switch must be properly installed and tested for proper operation as a system prestart condition.



Fig. 13 — Oil Pressure Safety Switch Manual Reset Button

All non-ammonia compressors would apply screw-in sensor 06DA509571 as applicable.

The oil safety switch is designed to protect the compressor against the loss of lubrication. The OPSS switch will close the control circuit at compressor startup and allow 120 second oil pressure transitional time delay. The switch will open the control circuit and shut the compressor off when:

- The oil pump pressure drops to a minimum 9 psig above the oil sump pressure after 120 seconds, or
- A time-integrated low differential oil pressure (9 psig) between the oil pump and oil sump pressure that is fluctuating 60% of the time ≤ to 9 psig over a 5 minute rolling window.
- The OPSS will not reset automatically, but must be manual reset provided the differential pressure between the oil sump and pump pressure is above 13 psig.

CARLYLE P/N	TIME DELAY (sec)	PRESSURE DIFF (psid)		VOLTS	RESET	REMOTE ALARM CIRCUIT CAPABLE
		Cut-out	Cut-in			
06DA509570	120	9-11	12-14	115/230	Manual	Yes

If Mechanical Oil Switch 5F20-212 is being used

To check, move contact arm at left side of switch forward (Fig. 14). Compressor should stop in approximately 45 seconds.

If compressor continues to run, check the wiring to safety switch. If wiring is correct, switch is faulty and should be replaced.

After completing test, wait 3 minutes; then press restart button on front of safety switch and restart compressor.

Check oil level in compressor sight glass after 15 to 20 minutes of operation. If the oil level is low, add oil by the methods described in Carlyle Standard Service Techniques Manual, Chapter 1, Section 1-11.

If an accessory oil cooler is provided, adjust the water flow as required to maintain a 100°F to 120°F crankcase return oil temperature.

For additional information, see Oil Safety Switch Accessory Package Installation Instructions.

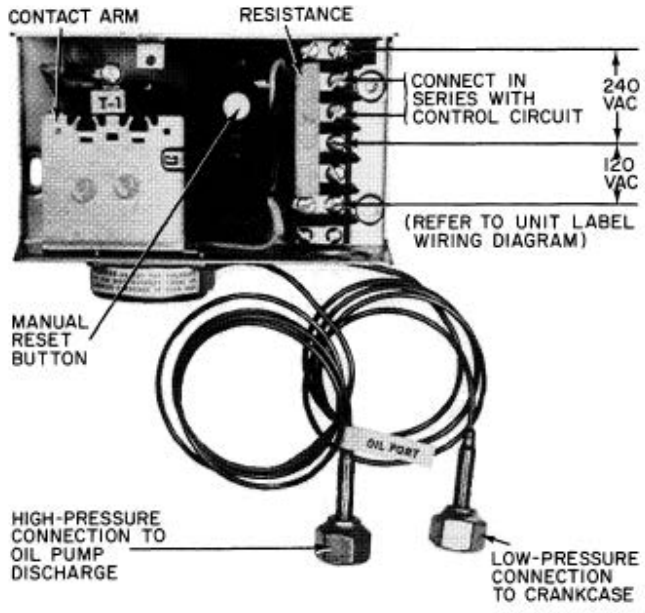

Fig. 14 — Oil Pressure Safety Switch Contact Arm

Adjust Capacity Control (if required)

5F20 AND 30 COMPRESSORS

Refer to Capacity Control Valve Installation Instructions for additional information.

5F40 AND 60, AND 5H40 THROUGH 126 COMPRESSORS

Determine the refrigerant usage:

If the system is to use R-134a, replace the 11-lb range adjustment spring (Fig. 15) with the 7-lb spring supplied with compressor. See instruction tag for spring replacement procedure.

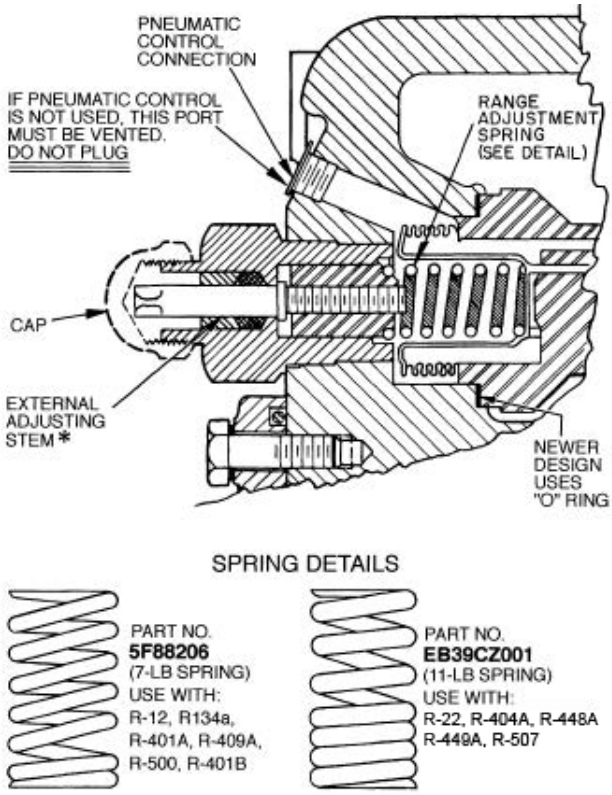

* When compressor is received, the capacity control adjusting stem will be backseated. (Compressor will be fully loaded under all conditions.) Compressor is supplied with 11-lb spring.

Fig. 15 — Capacity Control Valve

Capacity Control

The 5F and 5H compressor line has multiple configurations for cylinder unloading which are dependent on the compressor model type. For example the 5F20 and 5F30 models require an external pressure control valve kit to unload the compressor. For compressor models 5F40 through 5H126, the pressure control valve is internally installed.

Additionally there are external electric unloading conversion kits available for all 5FH compressor models, if pressure unloading is not preferred. These kits consist of 3-way valves, solenoid coils, and oil line sets that must be installed by the end user (reference instructions that come with these external unloading kits).

Factory-installed electrical unloading for the 5H40 – 5H126 compressor models are available. A redesign of the oil pump bearing end-bell incorporates electric unloading solenoid valves and oil pressure safety control factory installed. An external unloading kit is no longer required. The 5H41 – 5H81 ammonia compressors will be the first production models to utilize installed electrical unloading technology (see ammonia section). All 5H field compressors, that currently use pressure or external electric unloading, can be retrofitted with the redesigned electric unloading bearing head.

If cylinder head unloading is not preferred, all 5FH compressor models can be applied with a VFD for capacity control. The allowable speed range is 400 – 1750 rpm for non-ammonia models.

These compressor models will not have cylinder unloading capability.

The cylinder unloading mechanism is powered by a compressor force-feed lubricating system. This feature assures unloading of all controlled cylinders at starting regardless of the position of the capacity control valve, since suction valves will be held in open position until the lubricating oil pressure reaches its normal operating level. Refer to Fig. 16 for cylinder unloading sequence.

An external adjusting stem is provided to set control point and maintain desired suction pressure. The control point is adjustable from 0 to 85 psig suction pressure. Differential over the complete range at any temperature level is 10.7 psig with Refrigerant 22. A 7-lb spring (for use on 5F40 and larger units) is furnished with the compressor which, when used, results in an adjustable control point from 0 to 50 psig with a 6.8 psig range (see Fig. 17).

With this arrangement, suction pressure will not drop below the control set point minus the differential within range of capacity steps since the compressor will unload to balance its capacity with evaporator load.

Power elements and valve lifting mechanisms are identical on all 5F,H compressors. However, when using capacity control, various methods are used to activate the power elements.

See Table 7 for unloading steps and power requirements at each step.

CAPACITY CONTROL FOR 5F20 AND 5F30 (FIG. 18)

Major Elements of Control Systems:

1. *Capacity Control Valve:* Function is to raise or lower oil pressure from oil pump in response to refrigerant suction pressure.
2. *Power Elements:* Function is to supply power necessary to operate valve lifting mechanism. It is modulated by the capacity control valve.
3. *Valve Lifting Mechanism:* Consists of a sleeve and push pin assembly around each controlled cylinder, designed to hold the suction valve open, or to permit the valve to remain in a normal operating position depending on its actuation by the power element.

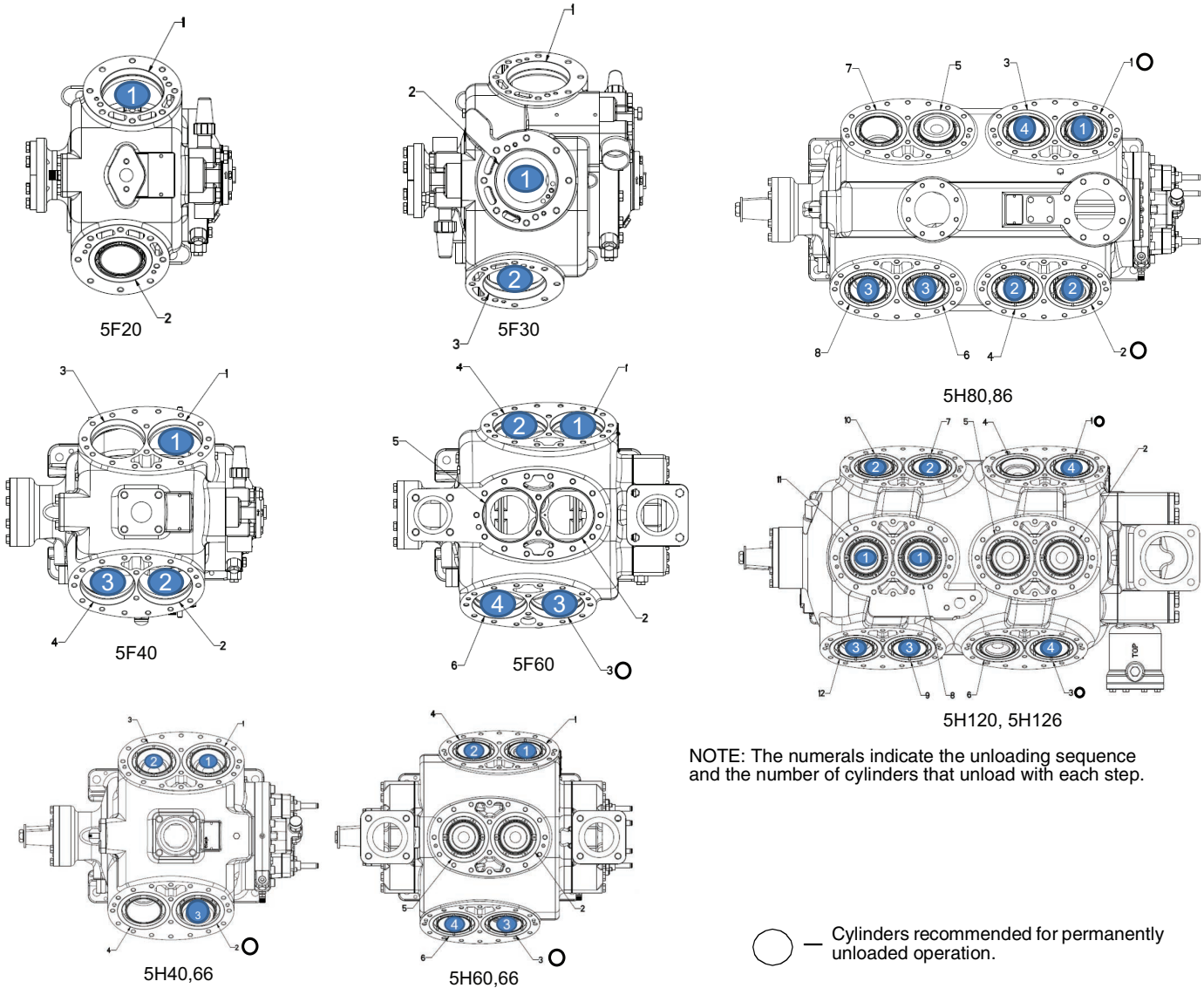

Fig. 16 — Cylinder Unloading Sequence

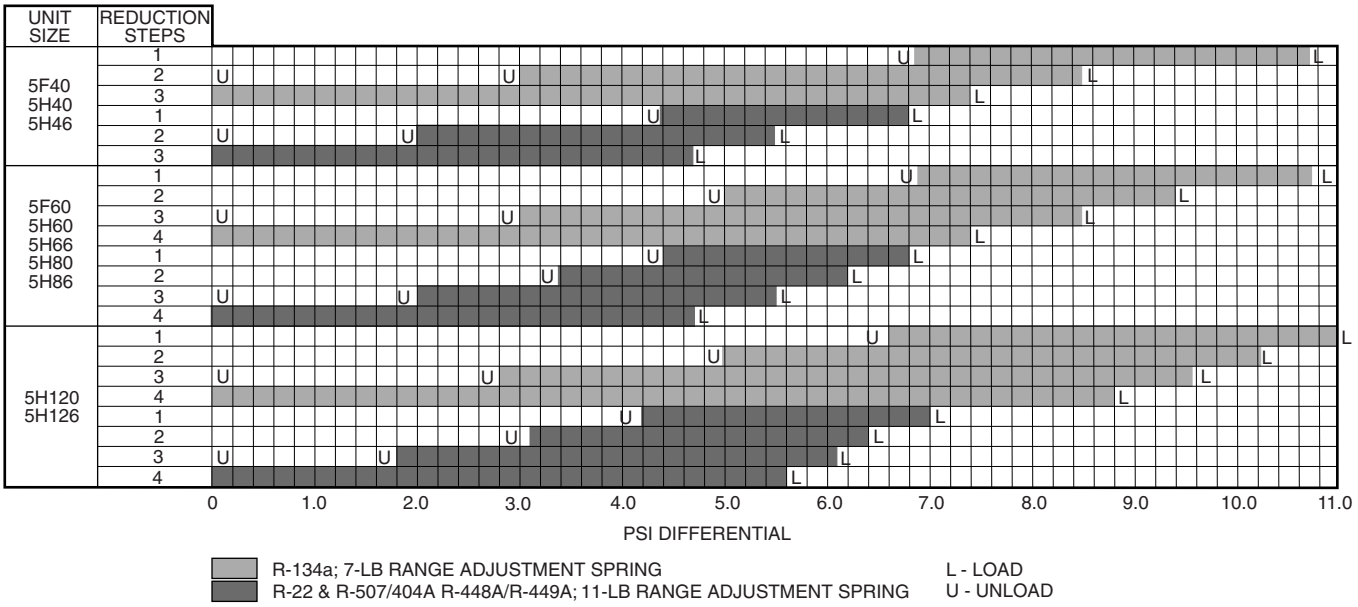

Fig. 17 — Operating Sequence of Capacity Reduction Steps

Table 7 — Capacity Control Reduction Steps

COMPR MODEL	CONTR CYL	CAP. STEPS (% FULL LOAD CAP.)									
		100	87 1/2	83 1/3	75	66 2/3	62 1/2	50	37 1/2	33 1/3	25
		% FULL LOAD BHP									
		100	90	86	80	74	71	60	50	45	38
		Number Of Active Cylinders									
5F20	1	2	—	—	—	—	—	1	—	—	—
5F30*	1	3	—	—	—	2	—	—	—	—	—
5F40	3	4	—	—	3	—	—	2	—	—	1
5F60	4	6	—	5	—	4	—	3	—	2	—
5H40	3	4	—	—	3	—	—	2	—	—	1
5H46	3	4	—	—	3	—	—	2	—	—	1
5H60	4	6	—	5	—	4	—	3	—	2	—
5H66	4	6	—	5	—	4	—	3	—	2	—
5H80	6	8	7	—	—	—	5	—	3	—	2
5H86	6	8	7	—	—	—	5	—	3	—	2
5H120	8	12	—	10	—	8	—	6	—	4	—
5H126	8	12	—	10	—	8	—	6	—	4	—

*Two controlled cylinders (to 33 1/3%) available on request for 5F30.

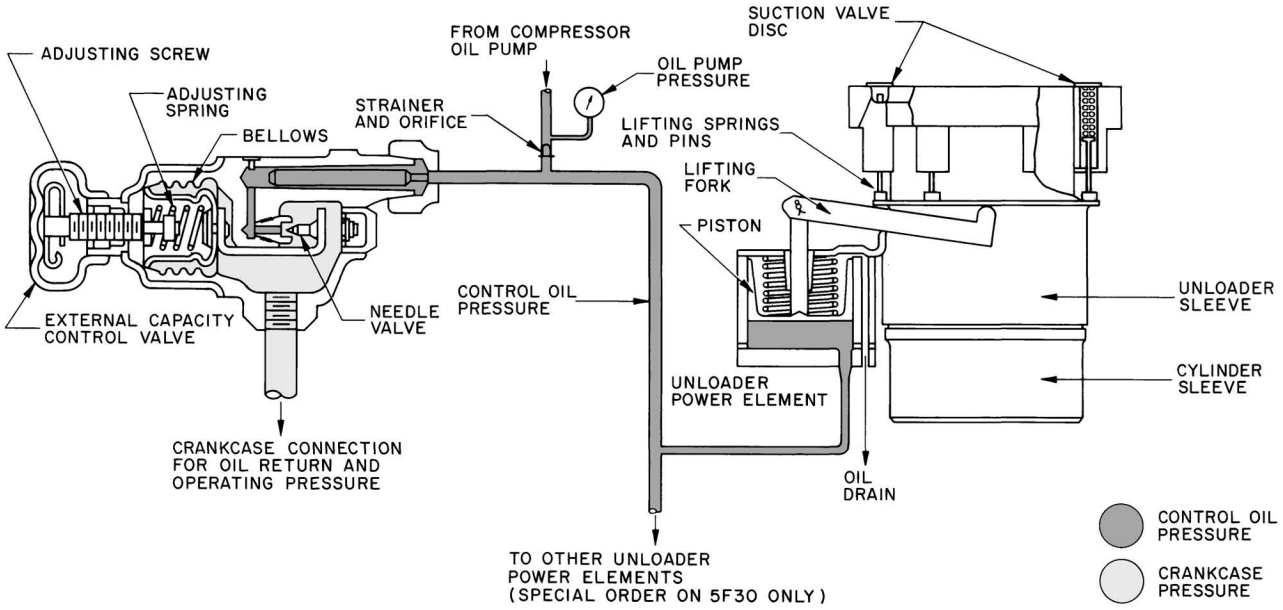

Fig. 18 — Capacity Control — 5F20, 5F30

Principle of Operation of the System

An increase in suction gas pressure, which requires increased compressor capacity, causes the needle valve to close. Therefore, lubrication oil pressure in power element increases. Increased oil pressure in power element moves the power piston upward and the suction valve discs are allowed to seat.

Table 8 indicates control oil pressure at which controlled cylinders start to unload and are completely unloaded.

Different points of control pressure on 5F30 are obtained by using springs with different loading rates in the power element.

CAPACITY CONTROL FOR 5F40 THROUGH 5H86 (FIG. 19)

Major Elements of Capacity Control Systems:

1. *Capacity Control Valve:* Function is to raise or lower the control oil pressure to the hydraulic relay piston in response to refrigerant suction pressure. Increase in suction pressure increases control oil pressure in the hydraulic relay.
2. *Hydraulic Relay:* Function is to feed lubrication oil from the oil pump at full pressure in sequence to one or more power elements. Relay is activated by control oil pressure from the capacity control valve.
3. *Power Element:* Supplies power to operate the valve lifting mechanism.
4. *Valve Lifting Mechanism:* Consists of a sleeve and push pin assembly around each controlled cylinder, designed to hold the suction valve open or to permit the valve to remain in a normal operating position, depending on its actuation by the power element.

Principle of Operation of the System

A decrease in suction gas pressure, which necessitates a decrease in compressor capacity, causes the range spring to open the capacity control modulating valve. This allows control oil to relieve from the hydraulic relay and thus reduces control oil pressure in the relay. With reduced control oil pressure, the spring in the hydraulic relay moves a piston and thus lubrication oil from the oil pump is prevented from flowing to a particular deactivated power element. This relieves oil pressure from the power element, allowing the spring in the power element to move the lifting fork and unload the cylinder. An increase in suction pressure reverses action and loads cylinders.

Table 8 — Initial and Final Unloading Oil Pressures — 5F20, 5F30

COMPR	NO. OF CONTROLLED CYLINDERS	START TO UNLOAD OIL PRESS. (PSI)	COMPLETELY UNLOADED OIL PRESS. (PSI)
5F20	1	19.8	13.0
5F30	1	30.0	20.2
	2	19.8	13.0

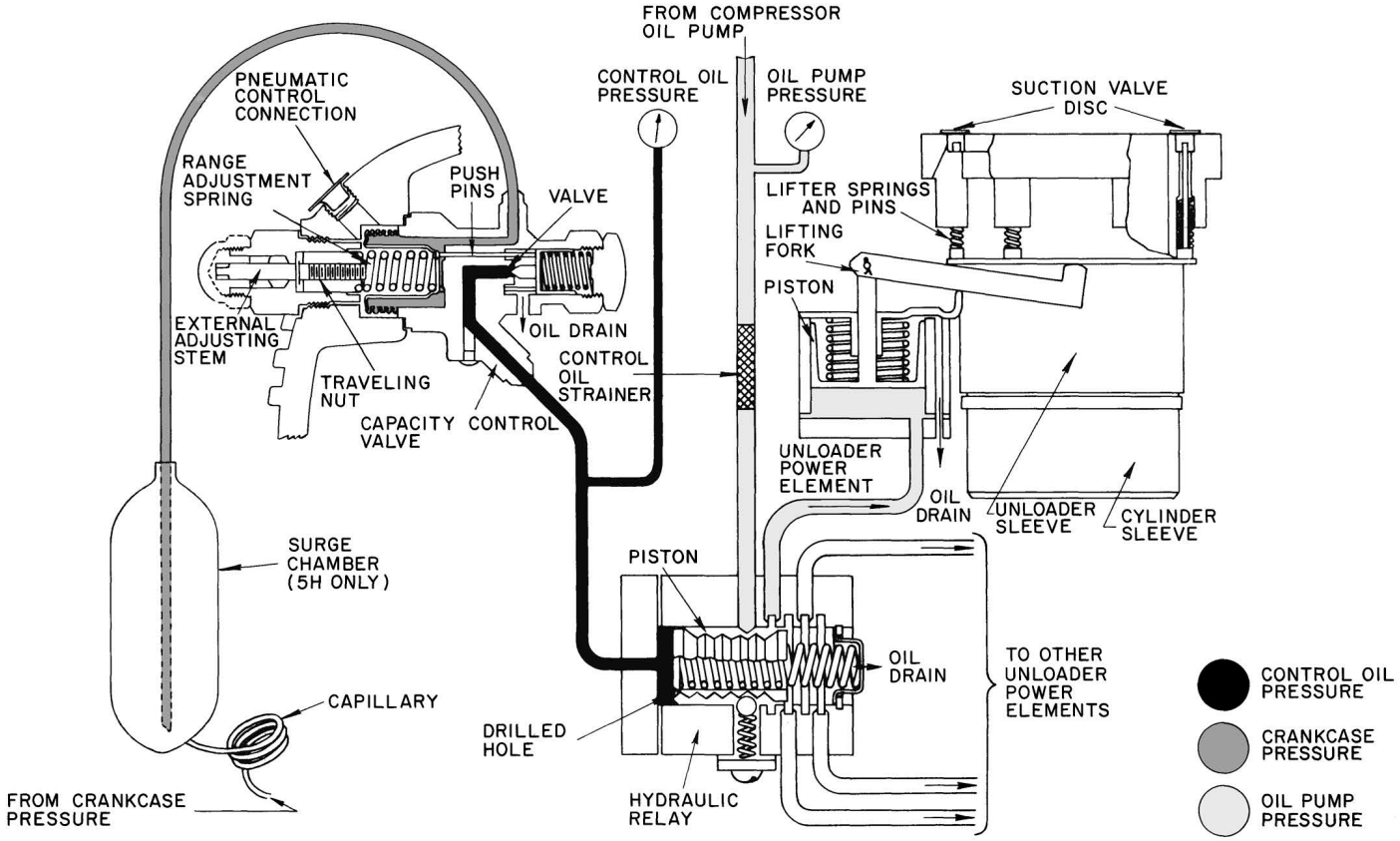

Fig. 19 — Capacity Control — 5F40, 60; 5H40, 46, 60, 66, 80 and 86

5H120, 5H126 CAPACITY CONTROL (FIG. 20)

This capacity control system is slightly different from the system on 5F40 through 5H86 compressors. Unloaded starting and capacity reduction is obtained by holding open the suction valves of a number of cylinders. For capacity control purposes, a suction-pressure-actuated capacity control valve pilots a hydraulic relay that loads or unloads cylinders in pairs.

Major Difference from the 5F40 through 5H86 Capacity Control

The hydraulic relay design provides a wider pressure differential between cylinder cut-in and cutout points. The relay is a small, easily removed cartridge rather than an integral part of pump end cover.

PNEUMATIC COMPENSATION OF COMPRESSOR CAPACITY CONTROL

Adding a control air line to the external pneumatic control connection permits pneumatic resetting of the control point in accordance with changes in operating conditions. Each pound of change in air pressure resets the control one pound in the same direction. Thus, a one-pound rise in air pressure will cause unloading to begin at a suction pressure one pound higher than the original control point, etc. Figure 19 shows a typical pneumatic control arrangement. All components and installation instructions are field supplied.

Control Pressurestats

Dual pressurestats come factory-installed with some 5F,H compressor models. They are often referred to as high- and low-pressure cutouts. Their function is to cut the circuit to the holding coil of the compressor motor starter when pressure setting limits are exceeded.

The high pressurestat has an operating range from 50 to 450 psig with a differential range from 170 to 235 psig (adj). The low pressurestat has an operating range from 20 in. Hg to 60 psig and a differential range from 60 to 90 psig (adj).

Pressurestat settings should be adjusted on the job to meet particular operating conditions for which the compressor(s) have been selected. Directions for setting these pressurestats are in the 5F,H Installation Instructions.

Permanently Unloaded Cylinders

Operation of an open-drive compressor with its cylinders permanently unloaded requires field modification. 5F60 through 5H66 compressors can operate with one cylinder unloaded; 5H80 through 5H126 compressors can operate with 2 cylinders unloaded. Compressors are modified by removing the suction valve and suction valve springs from the cylinder(s) shown in Fig. 16.

Compressor Operating Limits

Operation of ammonia compressors within the limits indicated in the published rating tables will result in trouble-free operation providing the following recommendations and limitations are applied. For physical data see Table 4; for ratings information see Fig. 21-24.

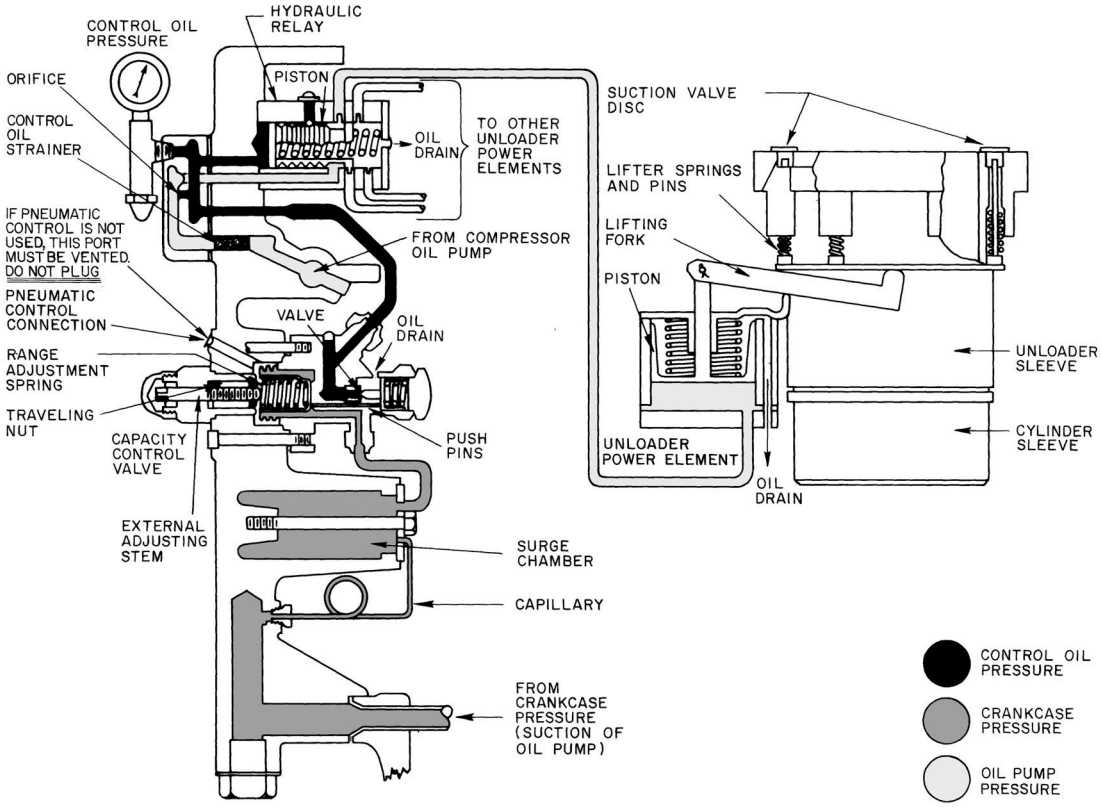

Fig. 20 — Capacity Control — 5H120, 5H126

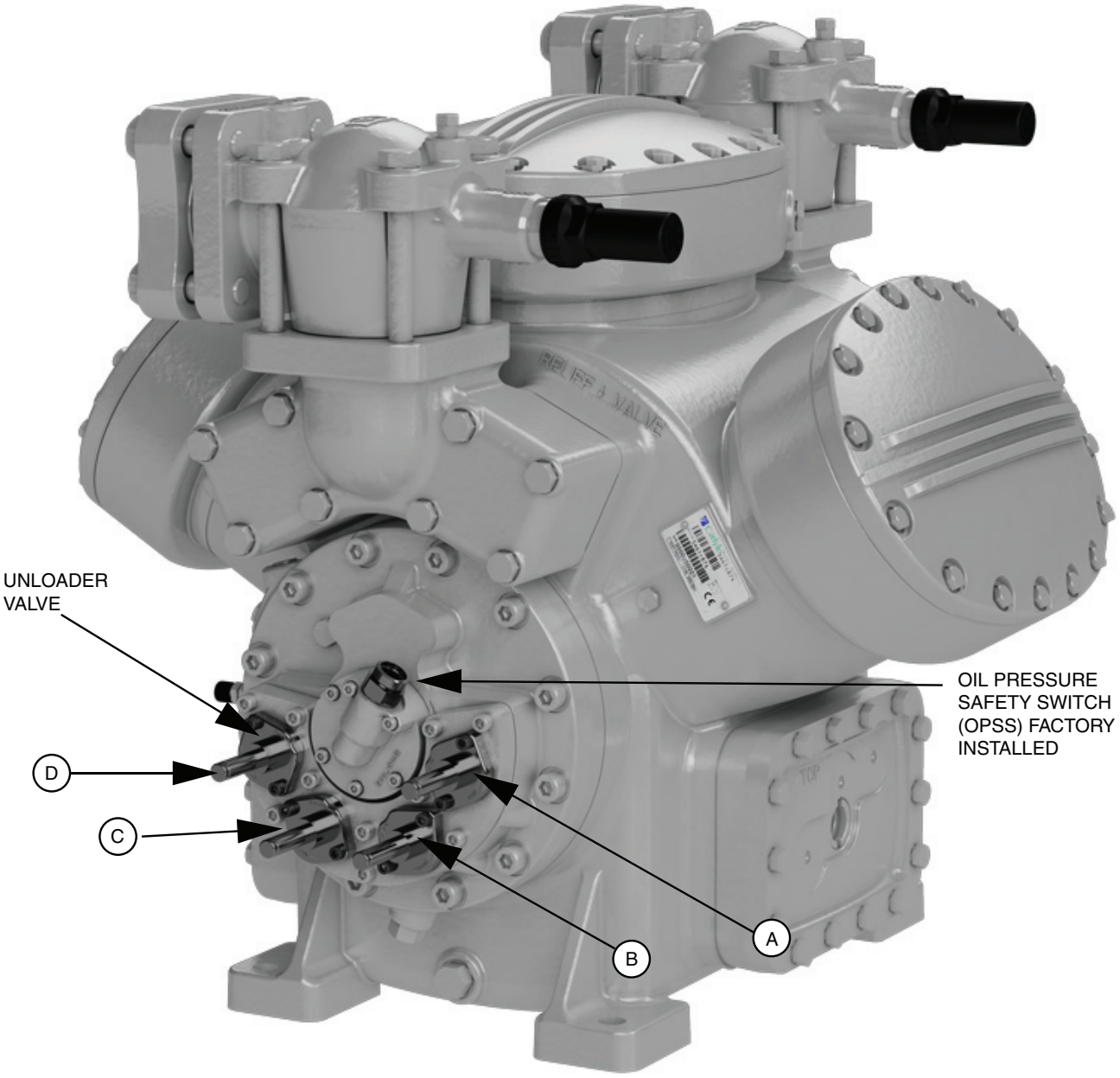

CAPACITY CONTROL STEPS - AMMONIA					
MODEL	**UNLOADING CYLINDERS**	**CAPACITY (% of full load)**	**UNLOADER VALVE DESIGNATION**	**UNLOADING STEP**	**CYLINDER UNLOADED SEQUENCE**
5H41	2 of 4 (2 steps)	75	A	1	1
		50	D	2	2
5H61	4 of 6 (4 steps)	83	A	1	1
		67	B	2	2
		50	D	3	3
		33	C	4	4
5H81	5 of 8 (3 steps)	87	A	1	1
		63	B	2	2, 2
		38	D	3	3, 3

Fig. 21 — Unloader Valve/Cylinder Designation

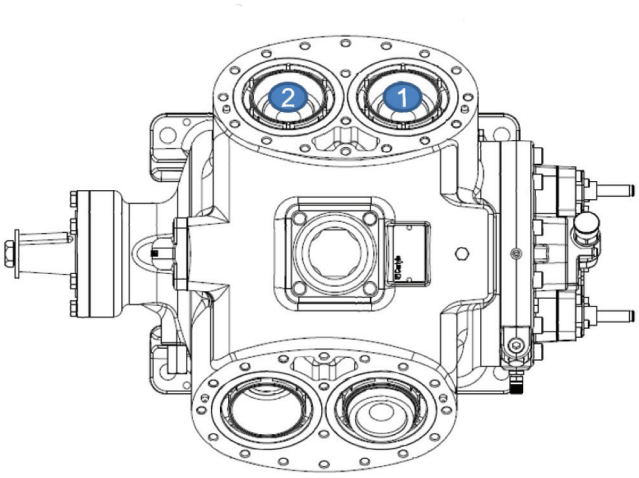

5H41

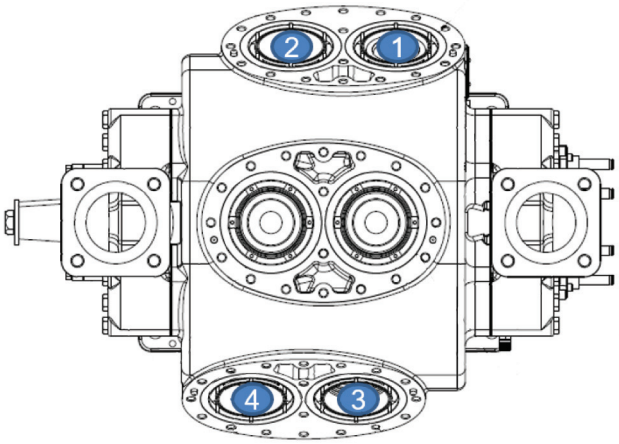

5H61

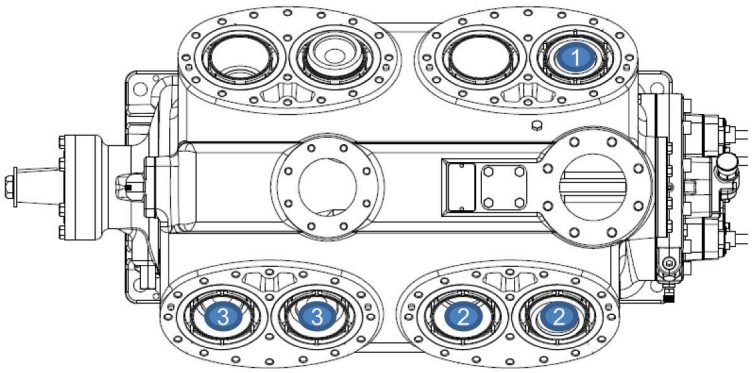

5H81

Fig. 22 — Cylinder Unloading Sequence

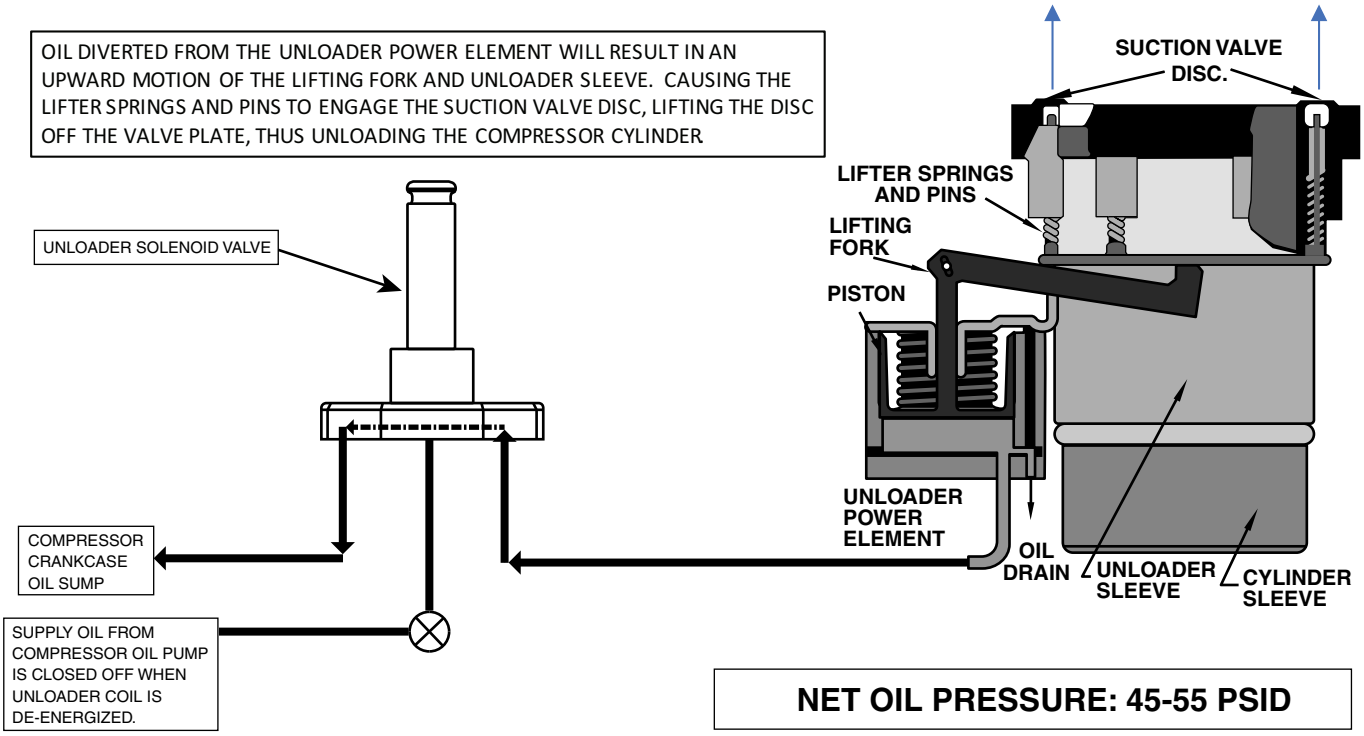

Fig. 23 — Compressor Unloaded

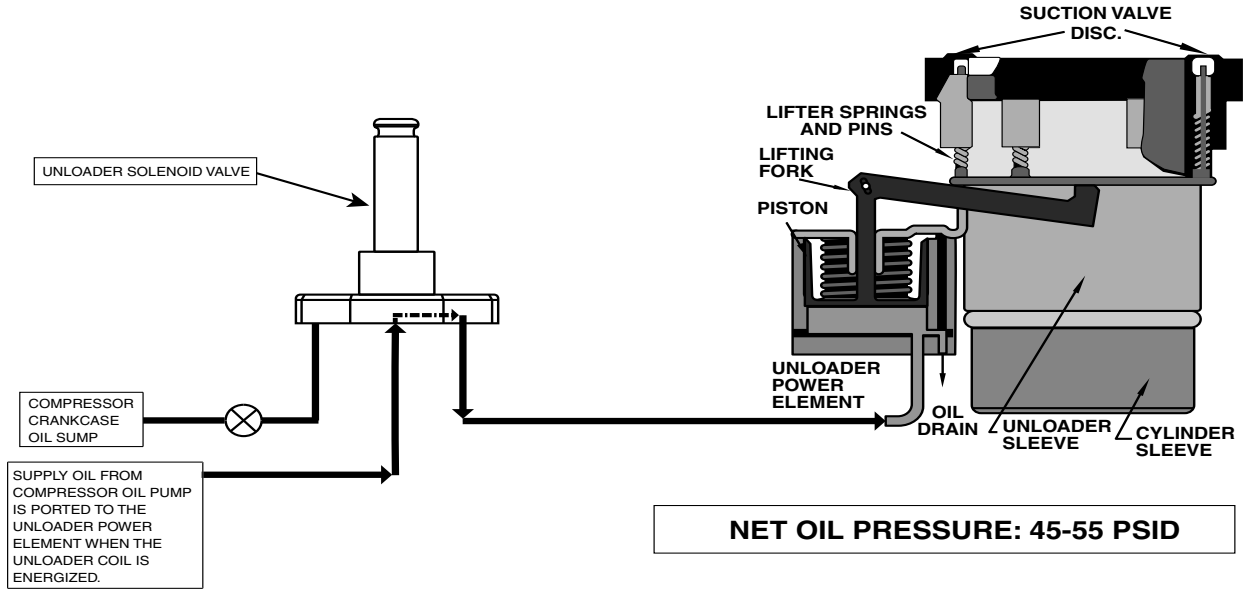

Fig. 24 — Compressor Loaded

To Adjust Control Point

1. Impose an artificial load on the compressor until suction pressure exceeds control point.
2. Slowly close suction valve to lower compressor suction pressure to control point pressure.
3. When at control point pressure, turn external adjusting stem clockwise until first step of unloading takes place, as indicated by changes in control oil pressure, current draw and sound of compressor.

Control point is now set. Reopen suction service valve. Compressor will be fully loaded when suction pressure is 3 psig (4 psig with R-22) above control point, and will be fully unloaded when suction pressure is 4 psig (7 psig with R-22) below control point.

5F20 AND 30 COMPRESSORS

Two capacity control packages are available as accessories. One is suitable for R-134a applications; the other for R-22 applications.

The adjusting stem (Fig. 13) is shipped in a backseated (fully counterclockwise) position. Compressor will be fully loaded under all conditions. Adjust the capacity control setpoint by the same 3-step procedure described above for 5F40 and 60, and 5H40 through 126 compressors.

SCHEDULED MAINTENANCE

5F,H compressor and condensing units provide long life and dependable service when properly operated and regularly maintained. Establish a maintenance schedule based on factors such as operating hours, load conditions and water quality. Maintenance schedules listed in this section are offered as guides. Modify them as needed to satisfy individual machine requirements.

Check Lubrication System

Always check compressor oil level before starting unit. If oil is required, record date and amount added. Refer to Fig. 1-7 for location of oil filter plug. Table 1 and Step 8 on page16 show specified types and quantities of oil.

Use of accessory oil separator requires additional oil. Oil level and separator float valve movement during initial compressor operation should agree with instructions furnished with the oil separator.

OIL FILTER MAINTENANCE

A bleed-type, high-pressure, disposable filter is available as an accessory for 5H40 through 5H86 compressors (Fig. 25). Replace oil filter after the first 50 hours of operation, or whenever the oil is changed or becomes dirty.

Check yearly for clogged filter, indicated by a greater than normal difference between oil pressure ahead of filter and after filter (before orifice elbow). When this difference exceeds 5 psig, change filter as follows:

1. Close oil-line shutoff valves on each side of filter (Fig. 25).
2. Disconnect oil lines at filter connections.
3. Loosen filter bracket; remove and replace filter body.

Refer to Accessory Oil Filter Instructions for additional information.

The full-flow oil filter, on 5H120 and 5H126 compressors only, contains a replaceable cartridge. Replace the filter cartridge after the first 100 hours of compressor operation. After the initial filter change, check yearly for filter clogging. If the pressure difference across the filter exceeds 5 psig, pump down the compressor and then remove the cartridge. Figure 26 illustrates complete filter assembly (not shown in Fig. 26).

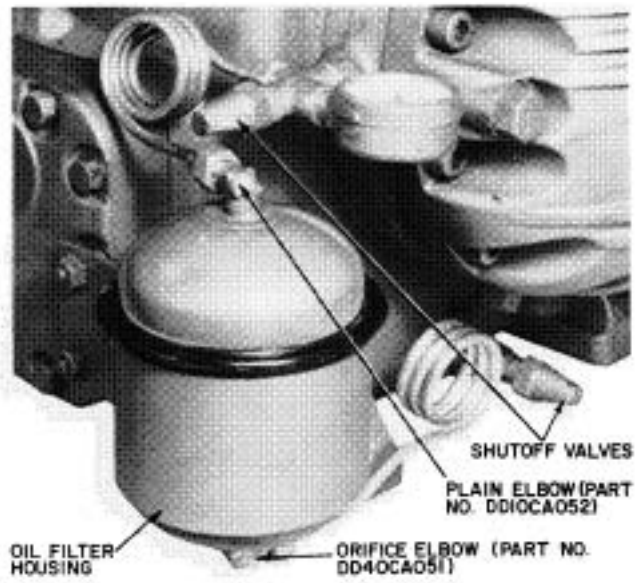

Fig. 25 — Oil Filter Accessory Package (5H40 through 5H86)

CHECK OIL AND SHAFT SEAL TEMPERATURE

The normal operating temperature of the oil in the crankcase ranges from 100°F to 135°F when fully loaded. Do not permit maximum oil temperature to exceed 150°F. Conditions under which such excessive temperatures could occur include situations where the compressor operates in a fully unloaded condition for an extended period, because the compressor would not be able to remove all of the heat generated by compression and friction. In such situations, use an oil cooler to maintain safe operating temperatures. Refer to 5F,H Application Data for more information.

When crankcase oil temperature falls within the 120 to 135°F range, the shaft seal housing temperature should be approximately 140 to 150°F. Shaft seal housing temperatures above 170°F may cause shaft seal to age rapidly, and harden and crack. Therefore:

If shaft seal housing temperature exceeds 170°F, STOP THE COMPRESSOR. DO NOT restart until the cause of overheating has been identified, and the condition corrected.

OIL COOLER USAGE

The accessory oil cooler maintains safe operating oil temperatures when:

1. Applying long stroke compressors (5H46, 66, 86 and 126). For added reliability, an oil cooler is recommended on all long stroke models regardless of operating range or type of refrigerant. Additional heat of friction from extended piston travel on long stroke models increases oil temperatures.
2. The suction gas becomes highly superheated.
3.
   a. The compression ratio exceeds 5:1 on R-22 systems.
   b. Application data indicates the need for an oil cooler for R-134a systems. The compression ratio can be determined from the following formula:

$$\text{Compression Ratio} = \frac{\text{Absolute Discharge Pressure}}{\text{Absolute Suction Pressure}}$$

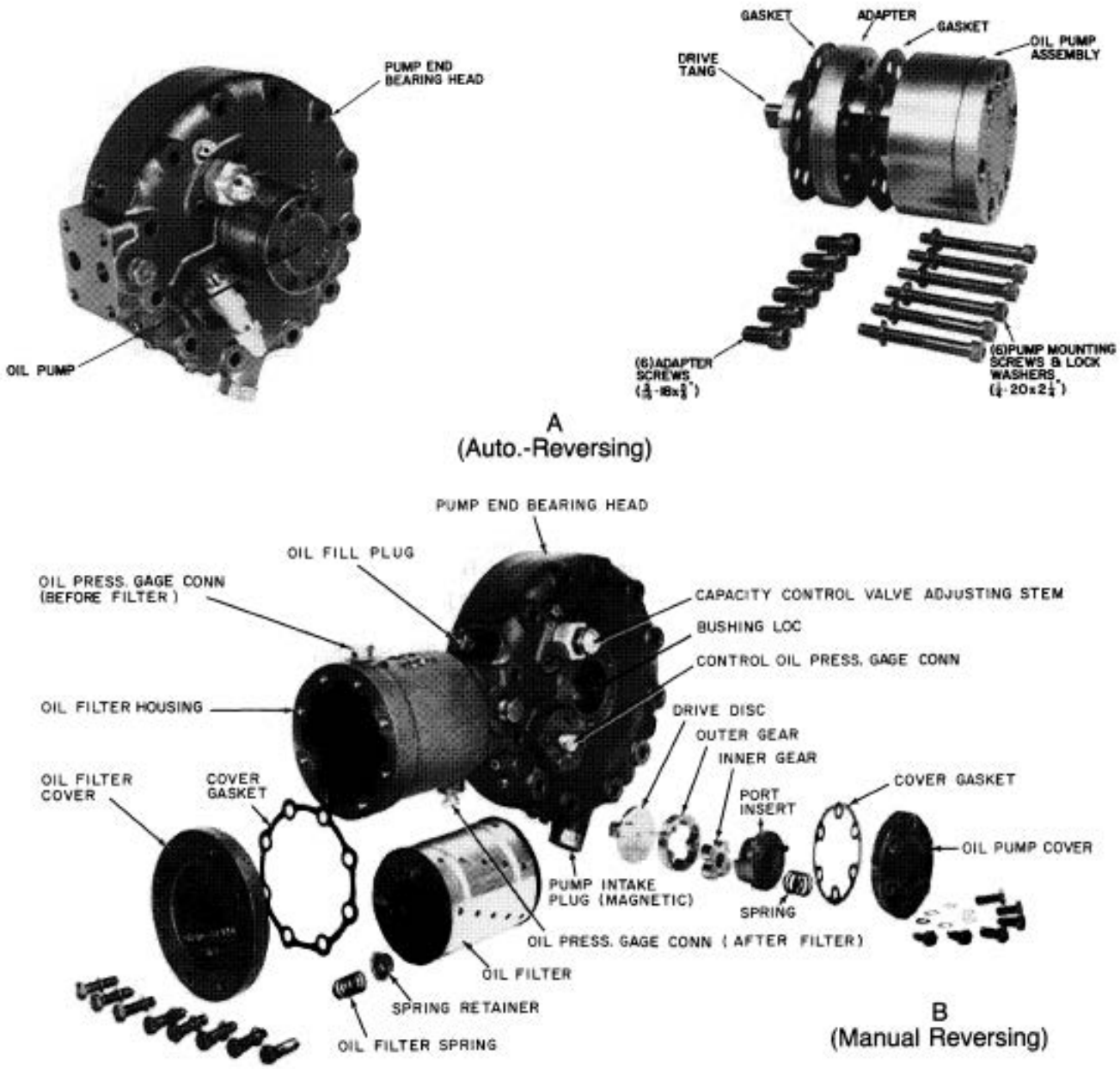

Fig. 26 — Oil Pump and Filter Assembly (5H120, 126)

NOTE: Do not operate unloaders at saturated suction temperatures at or below 0°F without prior approval from Carlyle Engineering.

4. The compressor operates fully unloaded for prolonged periods. Under these conditions, suction gas levels may not suffice to remove the heat of compression and friction. This condition can occur in any application, but is most likely in low-temperature systems or variable volume applications that use hot-gas bypass to maintain specified conditions under low evaporator load. Refer to 5F,H Application Data for additional information.

Adjust water flow rate through oil cooler to maintain 100 to 120°F oil temperature returning to compressor. Crankcase temperature must remain below 140°F; shaft seal temperature at the seal housing should not exceed 170°F.

Tables 9 and 10 list maximum working pressures for oil and water and estimated water flow rates for various oil cooler/compressor combinations. For additional information, see Accessory Oil Cooler Installation Instructions.

Table 9 — Oil Cooler Maximum Working Pressure

OIL	250 psig
WATER	150 psig

Table 10 — Oil Cooler Estimated Water Flow Rates

COMPRESSOR	GPM*
5F	1/4-1
5H4Q-66	1-2
5H80,86	11/2-3
5H120,126	2-4

*Flow rate based on 80°F entering water.

Check Water-Cooled Heads

To prevent oil breakdown and sludge formation, the discharge gas temperature must remain below 275°F. Water-cooled cylinder heads are available as an accessory for this purpose. See Accessory Water-Cooled Head Package Installation Instructions for additional information.

SERVICE

Service and repair of reciprocating compressors and other refrigeration components should be performed only by fully trained and qualified personnel.

Service Notes

1. Compressor components are shown in normal order of removal from compressor (Fig. 27 and 28).
2. For replacement items, use Carlyle specified parts. See Carlyle 5F,H Specified Parts list for compressor part interchangeability.
3. Before servicing compressor, pump down the refrigerant as follows:
   a. Start compressor, close suction service valve, and reduce crankcase pressure to 2 psig. (Bypass low pressurestat with jumper.)
   b. Stop compressor; close discharge service valve to isolate it from system.
   c. Recover or reclaim any residual refrigerant. Drain oil if necessary.
4. After disassembly, clean all parts with solvent. Use mineral spirits, white gasoline or naphtha.
5. Before assembly, coat all parts with compressor oil and clean and inspect all gasket surfaces. Replace all gaskets with new, factory-made gaskets, and lightly coat with oil. See Table 11 for torque values.
6. After reassembly, evacuate compressor and open suction and discharge valves. Restart compressor and adjust refrigerant charge.

Lubrication System

OIL PUMPS

5F compressors. See Fig. 29 and 31.

5H40-86 compressors. See Fig. 30 and 31.

5H120,126 compressors, with automatically reversing oil pump. See Fig. 26(A).

5H120,126 compressors, with manually reversing oil pump. See Fig. 26(B) and 32.

5H120 and 126 Compressor Oil Pump History Reference

TYPE	FIG.	DATE MANUFACTURED	SERIAL NO. BREAK
Auto.-Reversing	26	1960 through 1968 and Starting March 1986	From 0447119 to A901765 and Starting 1086J01967
Manually Reversing	26	Starting 1969 and Ending March 1986	Starting A901765 and Ending 1086J---

NOTE: By itself, the automatic reversing oil pump cannot be installed in place of the manually reversing oil pump or vice versa. The complete bearing head assembly with the oil pump (auto. or manual) is interchangeable as a complete assembly.

MANUALLY REVERSING OIL PUMP

Oil Pump Inspection

See Fig. 26, 29 and 30 for 5F and 5H manually reversing oil pumps. Also refer to 5H120, 126 auto-reversing oil pump section.

Drain oil below level of pump-end bearing head. Remove bearing head. Complete end-bell assembly must be removed to access bearing head assembly with oil pump on 5H40 through 86 models. Check oil pump rotor for end play. Maximum allowable movement of rotor is 0.0025. If there is excessive end play, reposition oil pump bushing in bearing head as described below.

Tum rotor. If there is more than a slight drag, remove pump cover and disassemble oil pump checking all parts for wear and damage. Inspect oil pump bushing for scoring. Replace bushing if scored. If bearing head is scored, replace complete bearing head and oil pump assembly.

Oil Pump Bushing Installation

See Fig. 31 and 32. Position the bushing oil groove at top (running from 12:00 to 6:00) when the bearing head is installed. Press new bushing into the pump-end bearing head from the inner side of the head with the chamfered end entering first.

Oil Pump Bushing Position

1.
   a. **5F20-60 and 5840-86.** See Fig. 31. Place 0.001-in. circular field fabricated shim against bushing and install pump. Shim between bushing and oil pump rotor. Complete assembly of oil pump with gasket and cover.
   b. **5H120,126.** See Fig. 32. Place 0.015-in. ($^1/_{64}$-in.) shim between port insert and oil pump cover. Complete assembly of oil pump and pump cover without using pump cover gasket.
2. Tap bushing with suitable cylindrical positioning tool to seat it against shim. See typical arrangement shown in Fig. 31.

⚠ WARNING

Oil pump assembly must be flush with coverplate surface, but must not protrude beyond bearing head surface.

3.
   a. **5F20-60 and 5840-86.** See Fig. 31. Disassemble oil pump and remove shim. Reassemble oil pump. Check for binding.
   b. **5H120,126.** Remove oil pump cover and shim. Reassemble pump cover with gasket. Check for binding.
4. Install bearing head on compressor. Line up tang on oil pump rotor shaft with slot in end of crankshaft. Check oil pump for proper direction of rotation.
5. Refill compressor oil to proper level. Observe oil pressure when starting compressor. Correct oil pressure should be 45 to 55 psig above suction pressure.

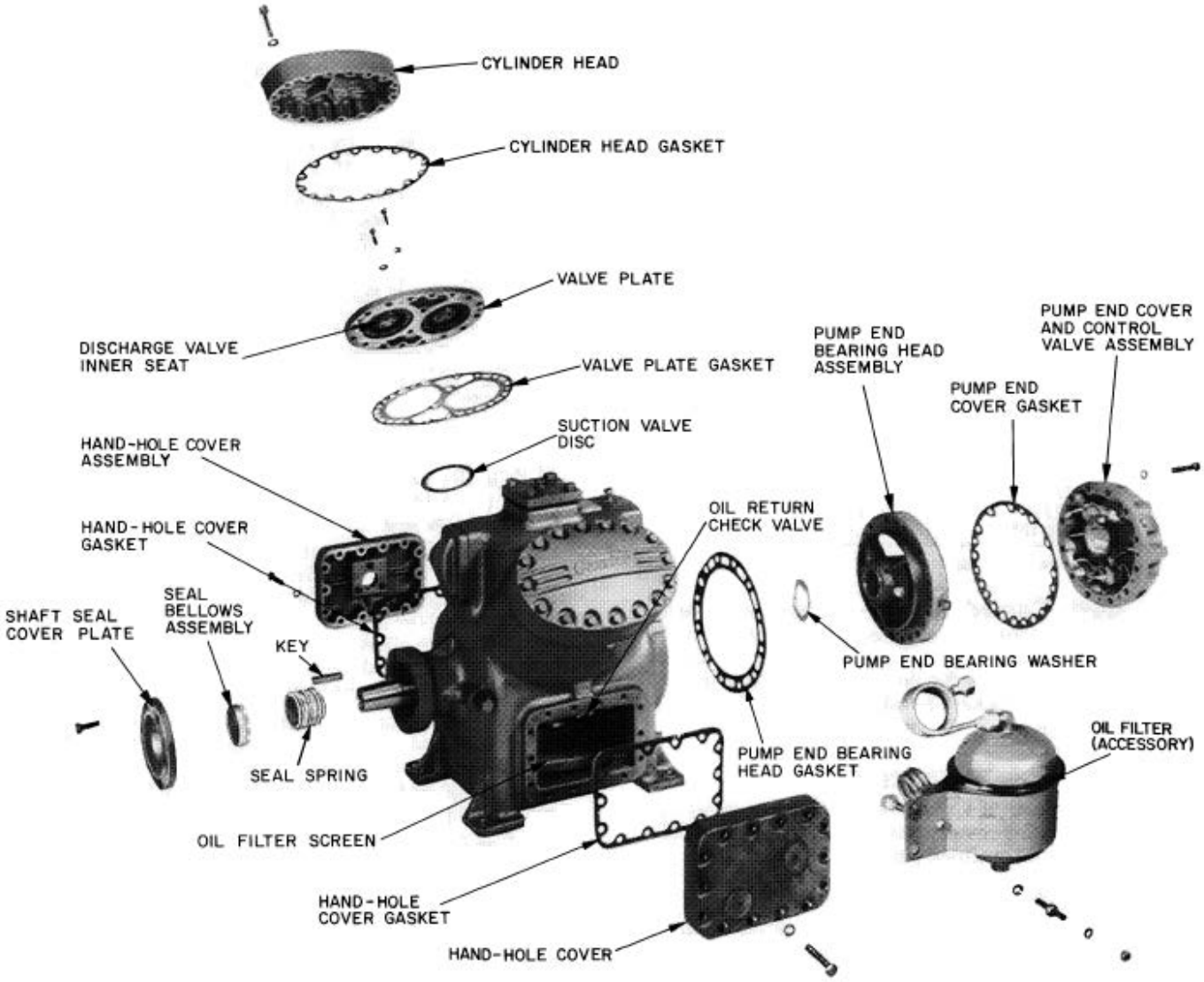

Fig. 27 — 5H Compressor External Components

AUTO. REVERSING OIL PUMP

Oil Pump Inspection

See Fig. 26 for 5H120 and 126 for automatic reversing oil pumps.

1. Drain oil below level of pump-end bearing head.
2. Remove bearing head from compressor.
3. Remove oil pump and adapter from bearing head.
4. Check all parts for wear and damage.

Pump Installation

1. Using a new gasket, mount bearing head on compressor. Tighten the $^{1}/_{2}$-13 cap screws to 80 lb-ft.
2. Put a drop of thread sealing compound (Loctite 601 or equivalent) on each of the $^{5}/_{16}$-18 adapter mounting screws and on threads of each mounting hole in bearing head. Position one of the supplied gaskets over holes in adapter and assemble the adapter loosely to bearing head.
3. Be sure there are no nicks or burrs on oil pump or bores in adapter and bearing head. Slide oil pump through adapter and into bearing head bore, allowing enough clearance to tighten adapter mounting screws with an Allen wrench. The clearance between oil pump housing and bores in adapter and bearing head is necessarily very close. *DO NOT USE FORCE and do not attempt to change the clearance.*

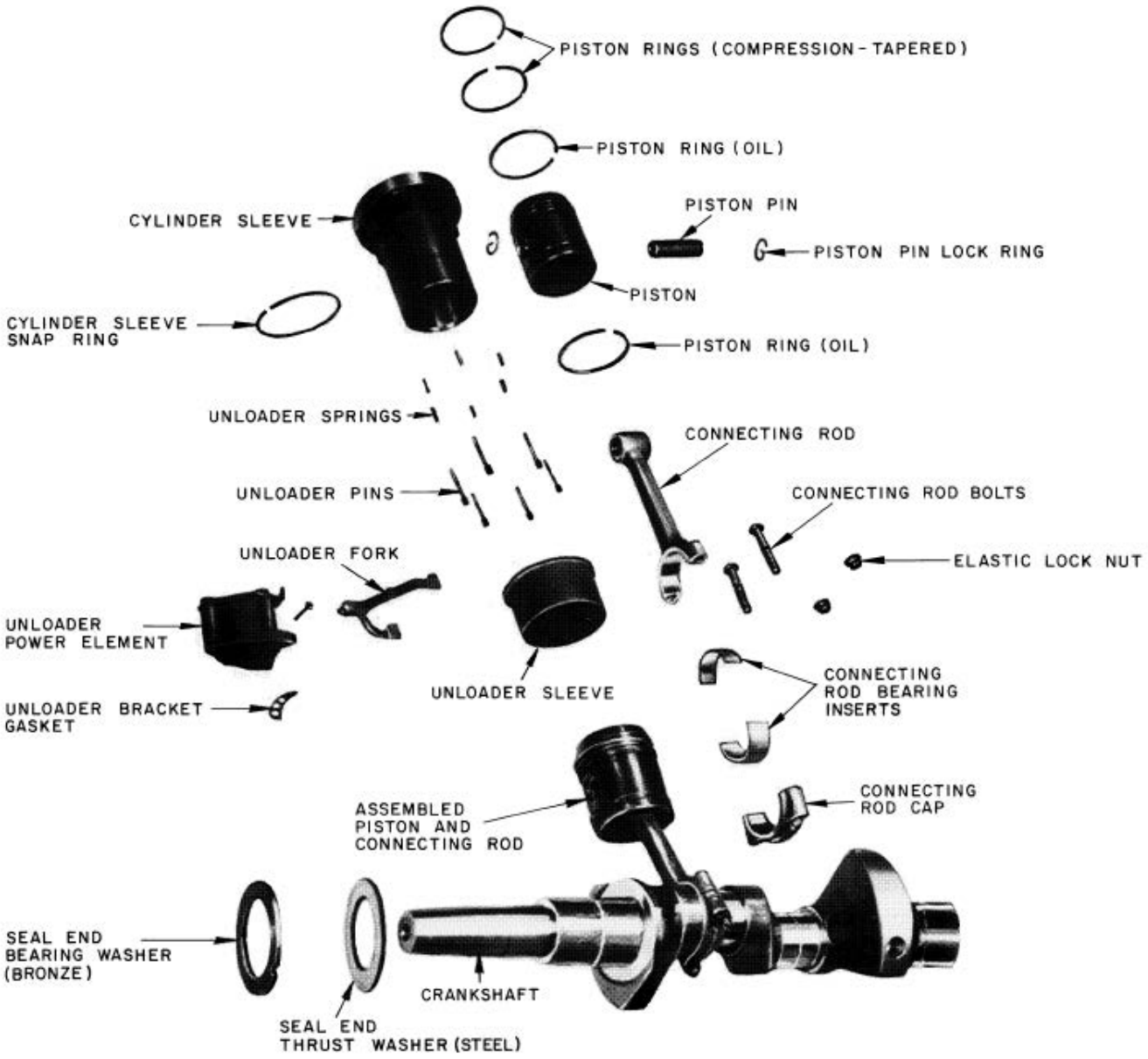

Fig. 28 — 5H Compressor Internal Components

Table 11 — Torque Values

5F UNITS			
SIZE DIA (in.)	THREADS PER IN.	RANGE (lb-ft)	USAGE
1/4	Pipe	20-25	Pipe Plug - Pump End Bearing Head
		20-25	Pipe Plug - Crankshaft
		20-25	Pipe Plug - Suction and Discharge Manifold Cover
1/4	28 NF	10-15	Unloader Power Element Assembly - Crankcase
		10-15	Unloader Cylinder Cover Plate - Unloader Cylinder Bracket
		12-15	Discharge Valve Cap Screw - Inner Seat
		12-15	Discharge Valve Guide Assembly - Valve Plate
		12-15	Oil Pump Cover - Pump End Bearing Head
		10-12	Auxiliary Control Valve Cover - Valve Body
5/16	24 NF	22-25	Connecting Rod Bolt - Locknut
		15-20	Capacity Control Valve - Hand-Hole Cover
3/8	Pipe	30-35	Pipe Plug - Pump End Bearing Head
3/8	16 NC	25-29	Cylinder Head - Crankcase
		25-29	Shaft Seal Cover Plate - Crankcases
		25-29	Bottom Plate - Crankcase
		25-29	Suction and Discharge Manifold Cover - Crankcase
		25-29	Pump End Bearing Head Assembly - Crankcase
		25-29	Hand-Hole Cover - Crankcase
		25-29	Suction Manifold - Crankcase
3/8	24 NF	45-50	Flywheel Screw - Crankshaft
7/16	20 NF	25-30	Oil Return Check Valve Assembly - Crankcase
1/2	13 NC	80-85	Suction Service Valve - Crankcase
		80-85	Discharge Service Valve - Crankcase
5/8	11 NC	120-130	Suction Service Valve - Suction Manifold
5/8	18 NC	60-75	Magnetic Plug - Crankcase
		60-75	Magnetic Plug - Pump End Bearing Head
		60-75	Oil Bypass Plug - Pump End Bearing Head
		60-75	Modulating Valve Adapter - Pump End Bearing Head
		60-75	Lock Screw - Pump End Bearing Head
		18-22	Oil Regulator Valve Assembly - Crankcase
		50-60	Cap-Oil Regulator Valve Assembly
3/4	10 NC	70-80	Flywheel Locknut Crankshaft
1 1/2	18 NEF	34-45	Sight Glass Clamping Gland - Hand-Hole Cover
No. 6	32	8-10	Auxiliary Control Valve Cover - Valve Body
5H UNITS			
1/16	Pipe	10-15	Pipe Plug - Auxiliary Control Valve Body
1/8	Pipe	15-20	Pipe Plug - Pump End Bearing Head
1/4	Pipe	20-25	Pipe Plug - Crankcase
		20-25	Pipe Plug - Pump End Cover
		20-25	Pipe Plug - Crankshaft
1/4	28 NF	12-16	Oil Pump Cover - Pump End Bearing Head
		8-12	Auxiliary Control Valve Cover - Valve Body
		8-12	Special Cap Screw - Auxiliary Control Valve Body
1/4	20 NC	8-10	Oil Pump - Bearing Head (12 cylinder)
5/16	18 NC	16-20	Oil Pump Cover - Pump End Bearing Head
		16-20	Capacity Control Valve - Pump End Bearing Head
		16-20	Auxiliary Control Valve - Pump End Bearing Head
		16-20	Manifold Cover Plate - Crankcase
		18-24	Oil Pump Adapter (12 cylinder)
5/16	24 NF	18-22	Unloader Power Element - Crankcase
		18-22	Capacity Control Valve - Pump End Cover
		18-22	Discharge Valve Guide Assembly - Valve Plate
		18-22	Discharge Valve Guide - Inner Seat
		18-22	Cylinder Bracket
3/8	Pipe	30-35	Pipe Plug - Pump End Bearing Head
		30-35	Pipe Plug - Crankshaft
3/8	16 NC	25-29	Capillary Tube Assembly - Pump End Bearing Head
		28	Connecting Rod Bolt (Aluminum Rod)
7/16	14 NC	35-60	Suction and Discharge Manifold Cover - Crankcase
		55-60	Discharge Manifold - Cylinder Heads
		55-60	Valve Plate - Crankcase
		55-60	Cylinder Head - Crankcase
		53-60	Hand-Hole Cover - Crankcase
		55-60	Shaft Seal Cover
		55-60	Pump End Cover and Pump End Bearing Head - Crankcase
7/16	20 NF	40-45	Connecting Rod Bolt - Locknut*
1/2	Pipe	35-50	Pipe Plug - Crankcase
		35-40	Pipe Plug - Pump End Bearing Head
		30-35	Pressure Relief Valve - Suction and Discharge Manifold Cover
		30-35	Pressure Relief Valve - Crankcase
1/2	13 NC	80-90	Suction and Discharge Manifold - Crankcase
		80-90	Suction Manifold Cover - Crankcase
		80-90	Pump End Bearing Head - Crankcase
		80-90	Oil Filter Housing - Bearing Head
5/8	11 NC	140-150	Suction Manifold Cover and Suction Manifold - Crankcase
5/8	18NF	60-75	Magnetic Plug - Pump End Bearing Head
		60-75	Modulating Valve Adapter - Crankcase
		60-75	Oil Bypass Plug - Crankcase
		60-75	Oil Bypass Plug - Pump End Bearing Head
		60-75	Oil Bypass Plug - Pump End Cover
		80-90	Hollow Lock Screw - Pump End Cover and Center Main Bearing Housing
		18-22	Oil Pressure Regulator Valve - Crankcase
		80-90	Cap-Oil Pressure Regulator Valve Assembly
7/8	14 NF	60-75	Seal Plug - Pump End Bearing Head
		18-22	Oil Pressure Regulator Valve - Crankcase
3/4	Pipe	45-50	Pipe Plug - Crankcase
1	Pipe	50-55	Pipe Plug - Crankcase
1 1/2	18 NEF	35-45	Sight Glass Clamping Gland - Hand-Hole Cover
No. 6	32	8-10	Auxiliary Control Valve Cover - Valve Body

LEGEND

NC — National Coarse
NEF — National Extra Fine
NF — National Fine
*Steel Rod.

Table 12 — Wear Limits; 5F,H Compressors

COMPRESSOR PART	COMPRESSOR					
	5F20,30,40,60			5H40,46,60,66,80,86,120,126		
	Factory Tolerances (in.)		Maximum Allowable Wear (in.)	Factory Tolerances (in.)		Maximum Allowable Wear (in.)*
	Max	Min		Max	Min	
SEAL END†						
Main Bearing Diameter — 5F20, 30	1.6264	1.6250	0.002	2.6264	2.6250	0.001
— 5F40, 60	2.0636	2.0618	0.001	—	—	—
Journal Diameter — 5F20, 30	1.6240	1.6233	0.003	2.6235	2.6225	0.002
— 5F40, 60	2.061	2.060	0.002	—	—	—
PUMP END†						
Main Bearing Diameter — 5F20, 30	1.6264	1.6250	0.002	2.2530	2.2502	0.001
(Assembled) — 5F40, 60	1.6264	1.6250	0.001	—	—	—
Journal Diameter	1.6240	1.6233	0.002	2.249	2.248	0.002
CENTER (5H80,86,120,126)†						
Main Bearing Diameter	—	—	—	2.6264	2.6250	0.001
Main Bearing Thickness	—	—	—	—	0.0942	0.001
Journal Diameter	—	—	—	2.6235	2.6225	0.002
CONNECTING ROD†						
Bearing Diameter	1.6255	1.6245	0.002	2.2505	2.2495	0.002
Bearing Thickness	—	0.06225	0.001	—	0.06225	0.001
Crankpin Diameter	1.6240	1.6233	0.003	—	2.248	0.002
Seal End Bearing Washer Thickness	0.131	0.129	**	0.188	0.186	**
Seal End Thrust Washer Thickness	0.157	0.155	**	0.188	0.186	**
Pump End Bearing Washer Thickness	0.131	0.129	**	0.188	0.186	**
CYLINDERS						
Bore	2.501	2.500	0.003	3.2515	3.2505	0.003
Piston Diameter — Steel, Standard Stroke — Aluminum, Long Stroke	—	2.4980	.003	3.2485	3.2480	0.003
Body	—	—	—	3.241	3.240	0.003
Ring Groove (OD)	—	—	—	3.235	3.232	0.003
Piston Pin Diameter	—	0.7498	0.001	—	0.9998	0.001
Piston Pin Bushing	0.7500	—	0.001	1.000	—	0.001
Piston Ring End Gap (compression and oil)††	.009	0.004	.030††	0.017	0.007	0.030††
Piston Ring Side Clearance						
Compression Side	0.0015	0.0005	0.003	0.0015	0.0005	0.003
Oil Side	0.0012	0.0002		0.0012	0.0002	
OIL PUMP						
Axial Clearance	0.0015	0.0005	0.0025	0.0015	0.0005	0.0025
Drive Shaft Diameter	0.4361	0.4356	—	0.4361	0.4356	—
Drive Shaft Bushing Diameter (10)	0.4375	—	—	0.4375	0.4370	—
Drive Shaft Diameter (5H120 & 126)	—	—	—	0.6250	0.6240	—
Drive Shaft Bushing Diameter (ID — 5H120 & 126)	—	—	—	0.6270	0.6260	—
SUCTION VALVE						
Suction Valve Disc (depth of wear below face)	—	-	.005	—	—	0.005
Suction Valve Seat	—	.012	.002	—	0.012	0.002
DISCHARGE VALVE						
Discharge Valve Disc (depth of wear below face)	—	—	.005	—	—	0.005
Discharge Valve Seat	—	.012	.002	—	0.012	0.002

* Same wear allowance applies to undersized shafts and bearings.

† Re-manufactured service compressors can be built with undersized main bearings and connecting-rod bearings. Compressors with undersized bearings are identified by the letter A, B, or C stamped on the compressor nameplate after the model number, and on both ends of the crankshaft.

A = 0.010-in., B = 0.020-in., C = 0.030-in. undersized bearings.

Replacement bearing heads for compressors with undersized shafts must be field-modified with proper undersized bearing.

** Replace thrust and bearing washers when end clearance exceeds maximum listed:

CRANKSHAFT END CLEARANCE (in.)	
5F20-5F60	0.011 to 0.035
5H40,46	0.010 to 0.036
5H60,66	0.011 to 0.037
5H80,86	0.014 to 0.042
5H120,126	0.014 to 0.044

†† Gap dimension increases (by up to 10%) when cylinder bores have been honed (if necessary) on 5F/H re-manufactured compressors.

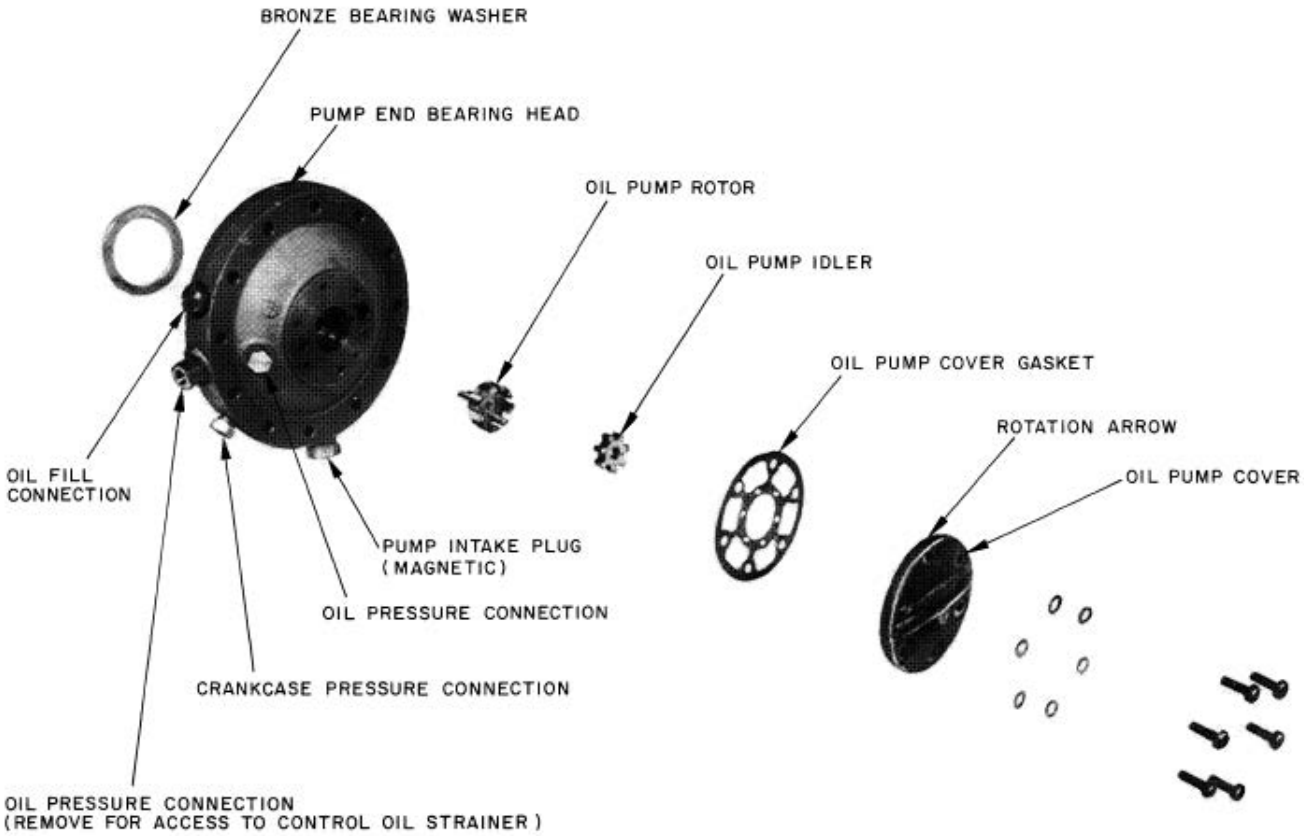

Fig. 29 — 5F Oil Pump Assembly

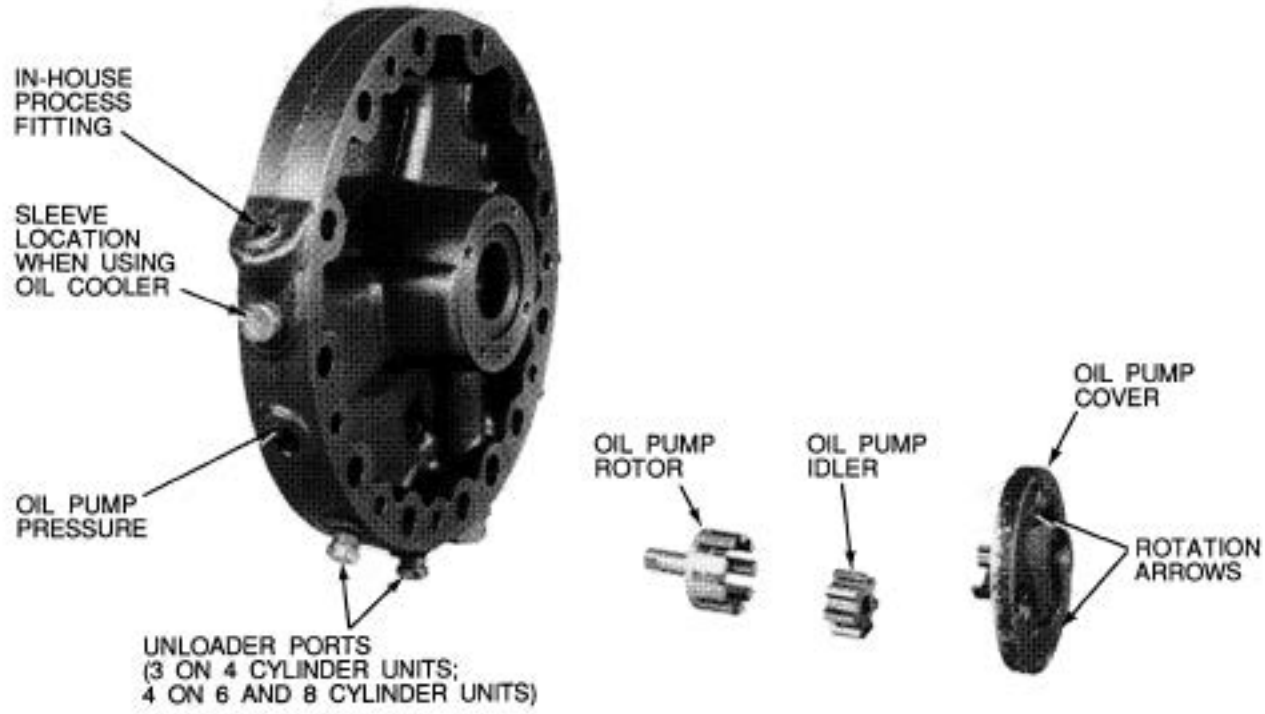

Fig. 30 — 5H40 through 86 Oil Pump Assembly

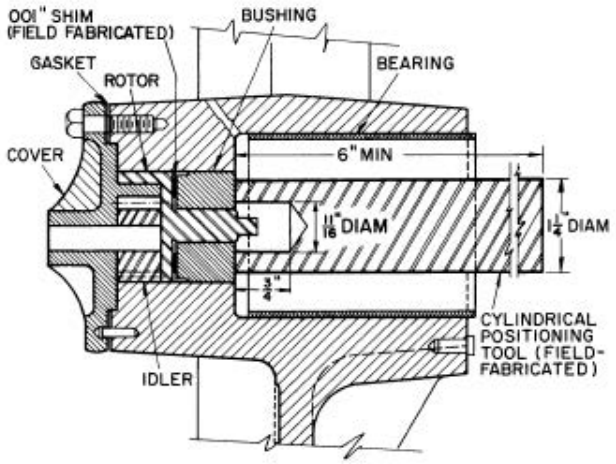

Fig. 31 — Setting Oil Pump Bushing (Typical 5F20 through 60, and 5H40 through 86 - 5F40 Bearing Head Shown)

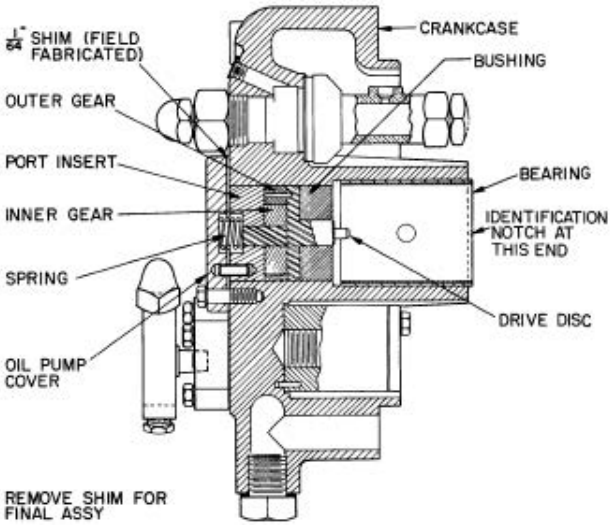

Fig. 32 — Setting Oil Pump Bushing (Typical 5H120, 126)

4. Hold pump with one hand and rotate it while equally tightening adapter mounting screws. *Proper alignment between pump and bearing head bore is extremely important. THERE MUST BE NO BINDING.*
5. When adapter is secure, remove pump assembly and place second gasket on pump housing. Insert two 1/4-20 mounting screws and lock washers, one on either side of the word TOP on pump end cover, and position gasket on screws. *For remaining operations, be sure the word TOP is at the top.*
6. Turn pump shaft to align drive tang with slot in end of crankshaft. Holding pump assembly with thumbs on the 2 screws, slide assembly into bearing head until tang engages slot. A slight rotation should align screws with tapped holes in adapter. Start screws to hold alignment and then install balance of screws and lock washers. Torque all screws (1/4-20) to 8 to 10 ft-lb.
7. Start compressor and check oil pressure. This oil pump operates in either direction of rotation. The correct oil pressure for compressors using this pump is 45 to 55 psig above suction pressure.

OIL PRESSURE REGULATING VALVE (nonadjustable, Fig. 33) is located on the side of compressor adjacent to seal housing. Regulator maintains correct oil pressure and ensures satisfactory unloader operation.



Fig. 33 — Oil Pressure Regulating Valve (Nonadjustable)

Unscrew regulator from crankcase; use 5/16-in. Allen wrench on all compressors except 5H120, which requires 1/2-in. Allen wrench. Regulator must not be clogged and plunger must not be stuck. Check drillings to regulator for fouling.

The nonadjustable oil pressure regulator is interchangeable on all current 5F,H compressors except 5H120 and 126 models. 5H120 and 126 units have larger, nonadjustable regulators. Early 5F,H compressors were equipped with an adjustable-type oil-pressure regulator. When an adjustable-type regulating valve needs replacing, use a nonadjustable regulator.

OIL RETURN CHECK VALVE (5F20 through 60, and 5H40 through 86) allows oil to return from suction manifold to crankcase. This normally open valve closes when crankcase pressure becomes higher than suction pressure (Fig. 34).

Two disc-type check valves on 5F20 and 30 compressors are located beneath partition between suction manifold and crankcase, one on each side of compressor. Remove check valves through bottom cover or pump end of compressor.

Leaf-type check valve on 5F40 and 60 and 5H40 through 86 compressors is accessible through, and located at top center of, handhole cover opening.

Remove check valves and check to see that flutter valve or leaf does not stick, and that it seats tightly.

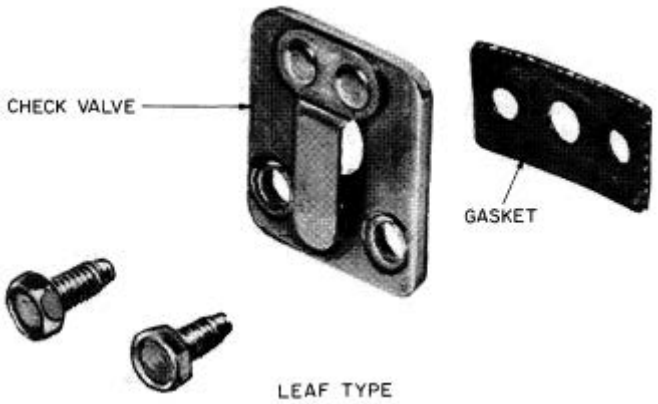

Fig. 34 — Oil Return Check Valves

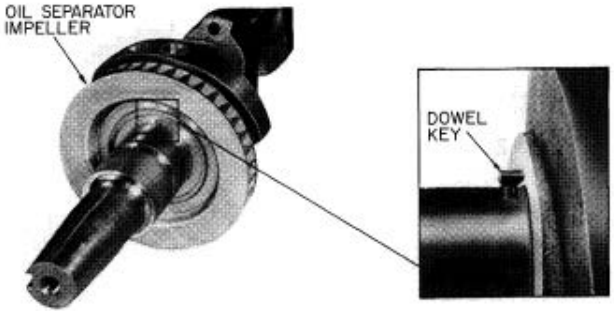

Fig. 35 — Centrifugal Oil Separator Impeller

CENTRIFUGAL OIL SEPARATOR on 5H120 and 126, mounted on crankshaft (Fig. 35), returns oil to compressor crankcase. To remove or replace oil separator, see Crankshaft Inspection and Service.

OIL FILTER SCREEN (Fig. 27) in compressor crankcase is accessible through hand-hole cover or bottom plate. Remove and inspect it for holes, then clean it with solvent and replace.

Pressure-Relief Valves

When pressure differential between high and low-pressure sides exceeds 350 ± 35 psi (5F60: 400 ± 40 psi), pressure-relief valve bleeds refrigerant from high to low side.

Check relief valves for evidence of leaking. Change if defective or if valve has ever opened due to excessive pressure.

5F60 COMPRESSORS

Internal relief valve screws into crankcase and projects up through left cylinder-bank valve plate (Fig. 36). Use a standard socket-type screwdriver to remove and replace valve.

5H40, 46, 80 AND 86 COMPRESSORS

Pressure-relief valve is located on suction and discharge manifold cover (Fig. 37).

5H60 AND 66 COMPRESSORS

Relief valve is located in wall between suction and discharge manifolds. Remove discharge manifold for access to relief valve. Use a standard $1^1/_2$-in. socket to remove and install the valve.

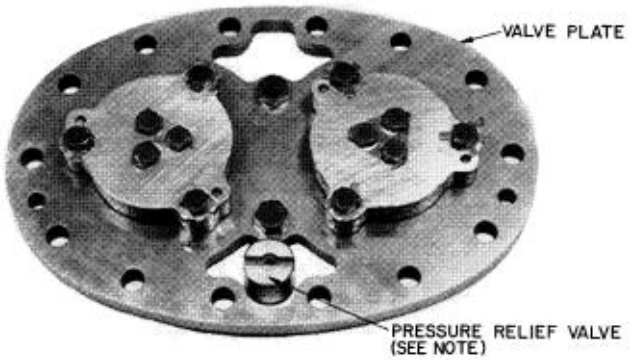

NOTE: The pressure-relief valve is not part of the valve plate assembly. The valve mounts in the crankcase in the left side cylinder deck (looking at pump end). The valve plate opening outlined slips over the pressure-relief valve when assembled.

Fig. 36 — Pressure Relief Valve (5F60)

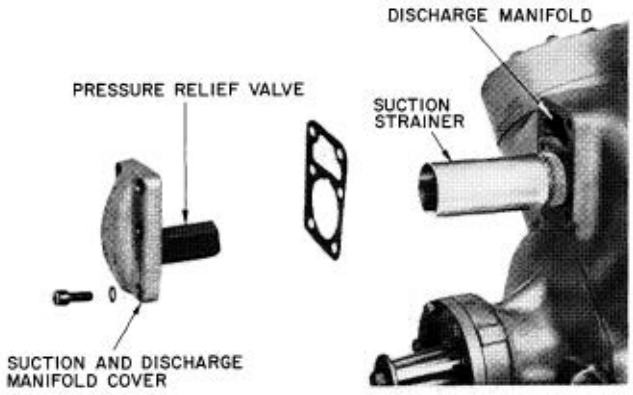

Fig. 37 — Pressure Relief Valve and Suction Strainer (5H40, 46, 80 and 86)

5H120 AND 126 COMPRESSORS are equipped with external relief valve mounted on bypass line between suction shutoff valve and discharge manifold. To remove valve, remove bolts from flanges on either side of valve.

Suction Strainer

To withdraw strainer on 5F20 and 40 and 5H40 and 46 compressors, remove suction and discharge manifold cover on seal end of compressor.

On 5F30 compressor, remove suction service valve. On 5F60 and 5H60 and 66 compressors, remove suction manifold and withdraw 2 strainers. On 5H80 and 86 compressors, remove suction manifold cover.

On 5H120 and 126 compressors, remove one suction manifold plate at a time so as not to disturb position of detachable suction manifold and suction line. Withdraw 2 suction strainers.

Clean strainer with solvent or replace if broken or corroded. When replacing suction strainer, do not damage it.

On 5H120 and 126 compressors, positioned manifold cover plate must compress strainer bail. If bail is too short, grasp on sides and elongate it enough to be compressed by manifold cover. Position bail between the 2 bosses on inside of manifold cover to prevent strainer from turning.

⚠ CAUTION

If a felt sock filter is installed, remove and inspect it after 50 hours of operation. Clean filter if required and replace it for another 50 hours. Clean the suction strainer whenever the felt sock is removed. Remove sock when system is clean. (Not applicable for 5F20 and 30 compressors.)

Cylinder Head and Valve Assemblies

CYLINDER HEAD INSPECTION

Remove cylinder heads and check heads for warping, cracks and damage to gasket surfaces.

VALVE INSPECTION (FIG. 38)

Disassembly

Remove cylinder head. Loosen cap screws holding discharge valve seat to discharge valve guide, and cap screws holding valve guide to valve plate. Remove cap screws holding valve plate to cylinder block. Remove valve plate from cylinder block and discharge valve guide from valve plate.

Inspection

Inspect suction and discharge valve discs and valve seats for cracks or excessive wear (Table 12). Check cylinder-sleeve valve stops for uneven wear. Replace valves if cracked or worn. If valve seats are worn, replace complete valve plate assembly. If cylinder-sleeve valve stops are worn, replace sleeve.

Reassembly

Pistons must be below tops of cylinder sleeves. To position correctly, tum crankshaft or force pistons down.

1. Place suction valve springs in valve plate recesses. Large spring coil should be in full contact with bottom of recess.
2. Place suction valve disc on valve springs; press disc into valve plate recess. Slide valve retainer clips into place (Fig. 39). Clips must not cover valve lifter springs or pins. Valve retainer clips 5F20-2061 (5F compressors) and 5H40-2061 (5H compressors) are field supplied.
3. Bolt valve plate to cylinder block. Remove valve clips.
4. Place discharge valve springs in discharge valve guide spring recesses.
5. Place discharge valve disc over springs, and fit inner spring in place over valve disc. Hand-tighten bolts holding inner seat to valve guide (valve guide assembly).

6. Place valve guide assembly on valve plate. Tighten all bolts and bend tabs on lock washer and lock plates. Replace cylinder head.

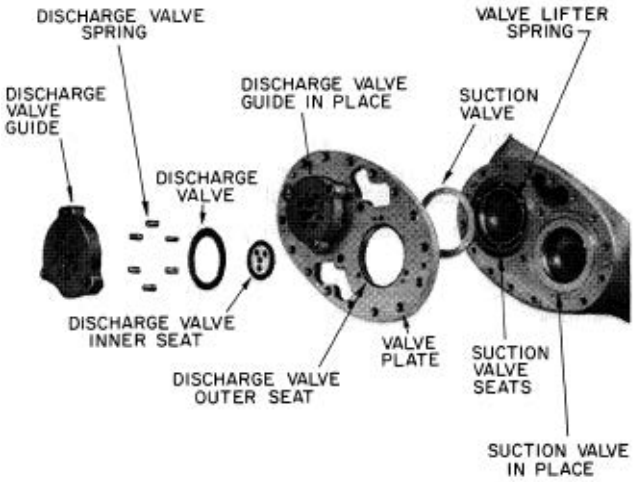

Fig. 38 — Suction and Discharge Valve Assembly

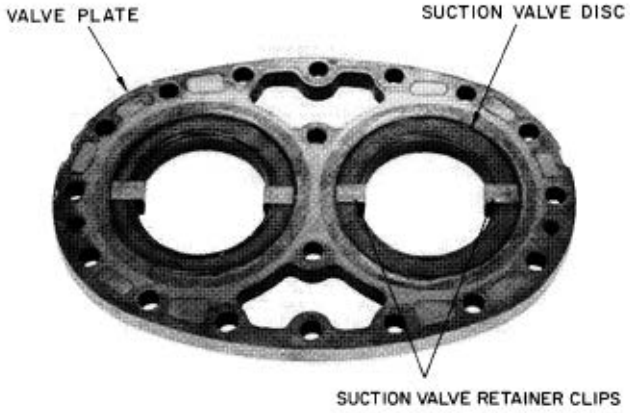

Fig. 39 — Valve Clips in Place Cylinder and Unloader Sleeves

DISASSEMBLY (FIG. 40)

Remove cylinder head, suction and discharge valve assembly, and pump-end bearing head. Whenever cylinder sleeve or valve plate is replaced, use a new suction valve disc.

1. Tum crankshaft until piston is in mid-position.
2. Insert a sleeve puller into cylinder and push it down onto top of piston.
3. Tighten nut on top of sleeve puller to expand puller in sleeve.
4. Tum crankshaft, forcing sleeve upward until it can be removed.
5. Remove unloader snap rings (5H compressors only). Disassemble un1oader sleeve, pins and springs.

INSPECTION

Examine bore of sleeve for wear. Check suction valve seats for scratches and wear. Check unloader sleeves, pins and springs for wear and freedom of movement (Table 12).

REASSEMBLY

When new rings are being installed in a used cylinder sleeve, break the hard, glazed surface of cylinder sleeve to reduce wearing-in period of new rings. Clean sleeves thoroughly after breaking glaze.

To reassemble:

1. Rotate crankshaft to position piston at top center.
2. Lubricate piston rings and beveled surface at lower edge of cylinder sleeve.
3. Stagger ring gaps around piston.
4. With turning motion, work sleeve over piston and rings. Compress and align each ring with beveled edge of sleeve.
5. Seat sleeve in suction manifold partition and cylinder deck recess.
6. Rotate sleeve so that any 2 valve lifter-pin holes lie equal distances from longitudinal axis of compressor (Fig. 40). In this position, lifter pins line up with suction valve springs.

⚠ CAUTION

Never operate compressor with heads or valve plate removed.

Connecting Rods and Pistons

REMOVAL

Remove cylinder head, valve plate and hand-hole cover or bottom plate to gain access to rods and pistons.

Remove connecting rod caps (Fig. 28). Label caps and rods so they may be reinstalled in same places on crankshaft. Remove cylinder sleeve, connecting rod and piston assembly as a unit by pushing assembly up through cylinder deck. Do not allow piston to come up through top of sleeve during removal process. Remove retaining rings and piston pins to disassemble connecting rods from pistons. Remove rings.

Keep each individual connecting rod and piston assembly together to aid reassembly. Check all parts and crankpin journals for wear (Table 12).

INSPECTION AND REPLACEMENT

Attach connecting rods to pistons with piston pins and lock in place with retaining rings. Piston pins are selectively fitted for a push fit; reassemble in the piston from which they were removed. Place piston pin retaining rings, with gap on side, on piston (Fig. 41). They should be tight enough to inhibit rotation under finger pressure.

Check Rings

1. Check ring gap by inserting each ring separately in cylinder approximately% in. from top. Ring gap should be between 0.007 and 0.017 inches.
2. Install compression rings on piston with marked side up (see Fig. 41) toward piston head. Install oil rings either side up.
3. Stagger ring gaps around piston.
4. Measure side clearance between ring and piston (approximately 0.001 inch). Check rings for free action.

Check Rod Bearing Inserts (Fig. 28)

If bearing inserts are damaged and crankshaft is not worn, it is only necessary to replace inserts. Do not file bearing caps. Place the inserts in connecting rod and connecting rod caps so knobs on inserts fit into notches on rod cap. Lubricate insert bearing and crankpin freely before installing caps.

Install cylinder sleeve, connecting rod and piston assembly at the same time. Turn connecting rod, and install cap so chamfered sides are against radius of crankpin. (Small knobs on rod and caps must be on same side of journal.)

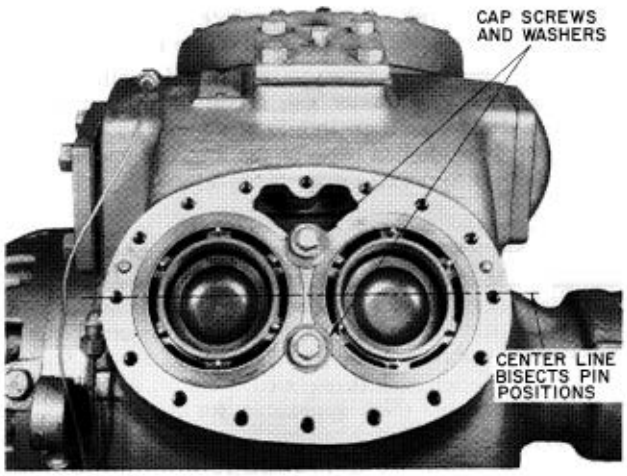

Fig. 40 — Position of Cylinder Sleeves

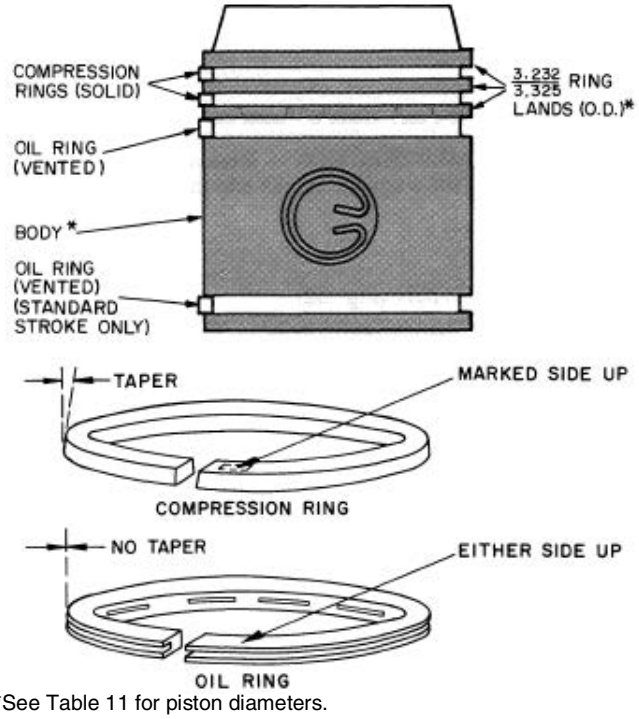

*See Table 11 for piston diameters.

Fig. 41 — Piston and Rings

Capacity Control Operation

All 5F,H series compressors, except 5F20 and 30 units, include hydraulic capacity control unloader systems as standard equipment. (Field-installed accessory unloader packages are available for the 5F20 and 30.) The unloader system activates and deactivates the compressor's cylinder banks, by permitting suction valves to seat or preventing them from doing so, in response to changing load demands. Capacity control unloaders can reduce a unit's actual operating capacity by steps down to as little as 25% of its total capacity. Figures 16 and 22 show the sequence and number of cylinders that unload with each step.

Capacity control unloader systems consist of 4 major components:

1. A capacity control valve, which increases or decreases control oil pressure to the hydraulic relay piston proportionally when the suction pressure from the crankcase rises or falls.
2. **A hydraulic relay,** which (except on the 5F20 and 30) feeds oil to the unloader power elements in sequence. Control oil pressure from the capacity control valve activates this relay.
3. **A hydraulic power element,** which supplies the power necessary to operate the valve-lifting mechanism. It is modulated by the capacity control valve.
4. **A valve-lifting mechanism,** which consists of a sleeve, a lifting fork and a push-pin assembly around each controlled cylinder. The valve-lifting mechanism holds the suction valve open, or permits the valve to remain in normal operating position depending on its actuation by the power element.

These components operate in the following manner:

5F20 AND 30 CAPACITY CONTROL OPERATION (FIG. 42) (WITH OPTIONAL UNLOADERS AND CONTROL)

Loaded Operation

A rise in suction pressure causes needle valve to close. Oil pressure in power element increases as oil enters capacity control circuit from oil pump. Power element piston is forced upward, pivoting lifting fork downward. Lifter pins drop, allowing suction valve to seat and load controlled cylinder.

Unloaded Operation

A drop in suction pressure causes needle valve to open. Oil bleeds through valve to crankcase, decreasing oil pressure in power element. As oil pressure to power element drops, the piston moves downward. Lifting fork pivots upward, moving lifting pins upward; suction valve rises from its seat and controlled cylinder unloads.

5F40 AND 60, AND 5H40 THROUGH 126 CAPACITY CONTROL OPERATION (FIG. 43 AND 44)

Loaded Operation

A rise in suction pressure increases pressure against capacity control valve bellows, compressing range adjustment spring. Compression of range adjustment spring allows valve spring to move push pins and valve needle point toward valve seat. Flow of control oil to crankcase through oil drain is throttled.

Control oil pressure rises as oil enters capacity control circuit through orifice from compressor oil pump circuit. Increased control oil pressure advances hydraulic relay piston (against spring) which feeds oil at full pressure to one or more controlled cylinder power elements depending on position of control valve.

Pump oil pressure in unloader power elements forces piston upward, pivoting the lifting fork(s) downward. Lifter pins drop, allowing suction valve(s) to seat and load cylinder(s).

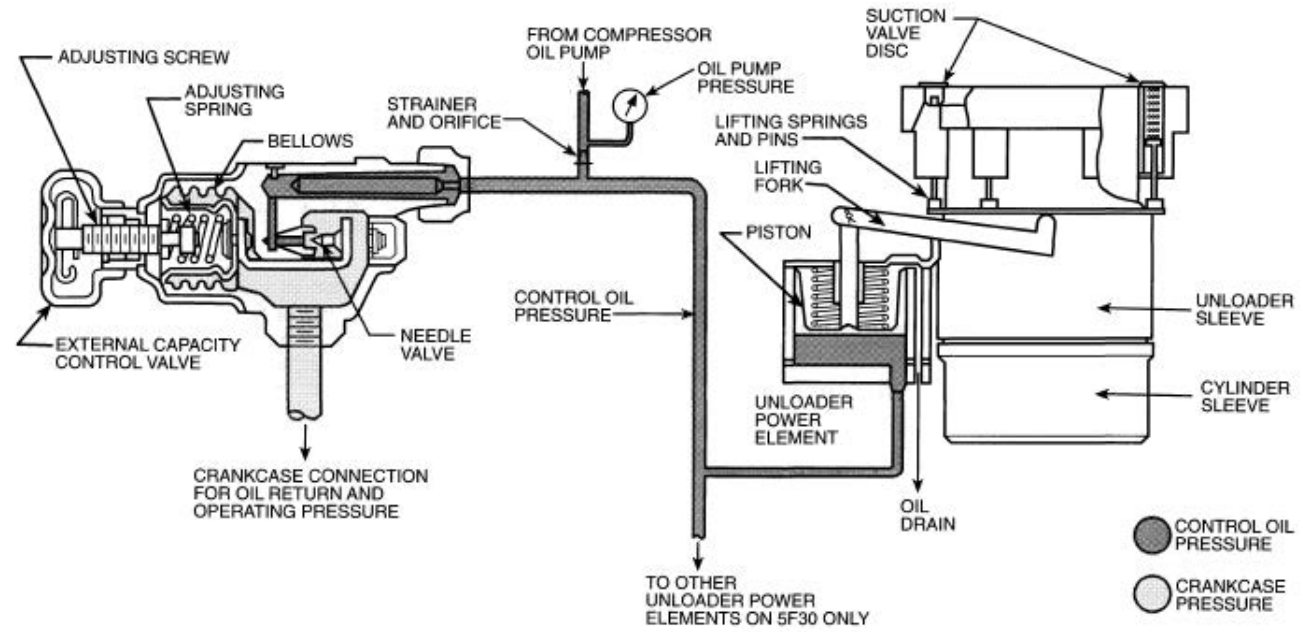

Fig. 42 — Capacity Control (5F20, 5F30)

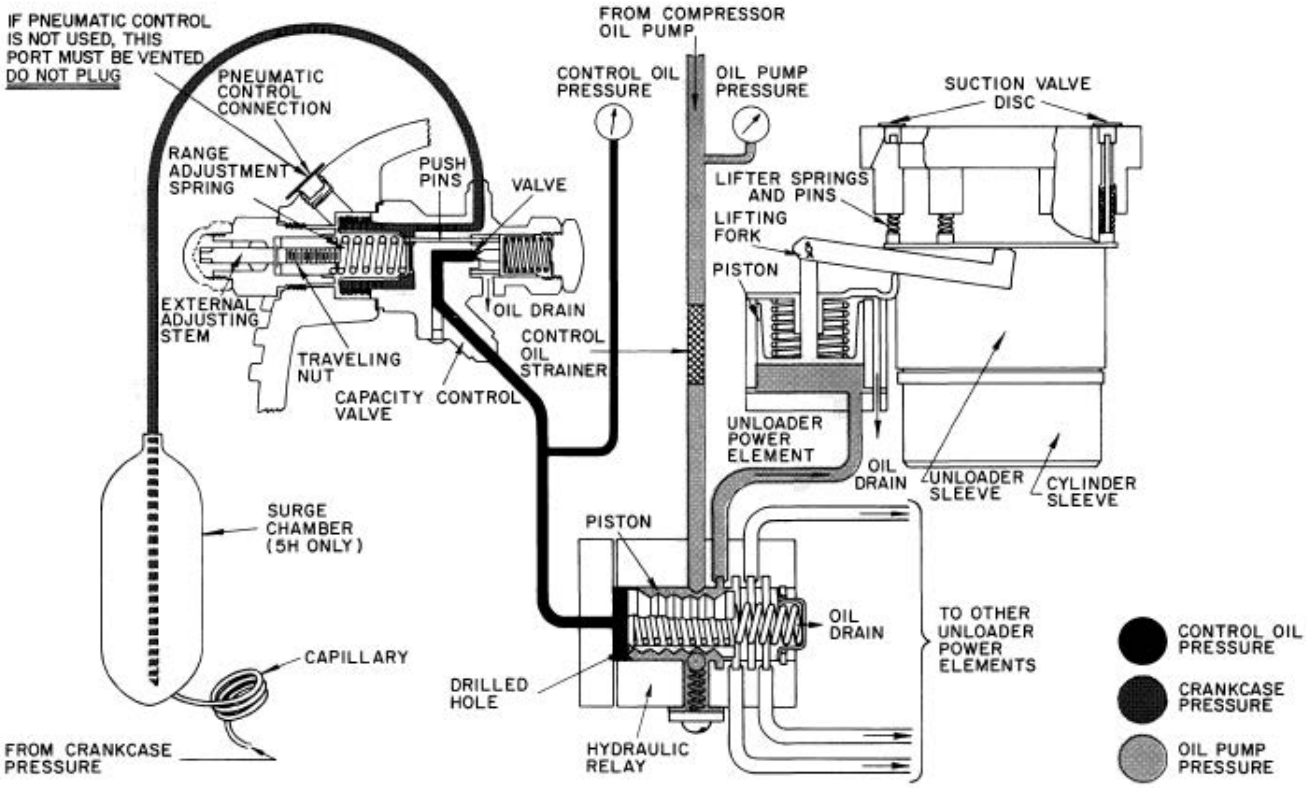

Fig. 43 — Capacity Control Operation (5F40, 60; 5H40, 60, 66, 80 and 86)

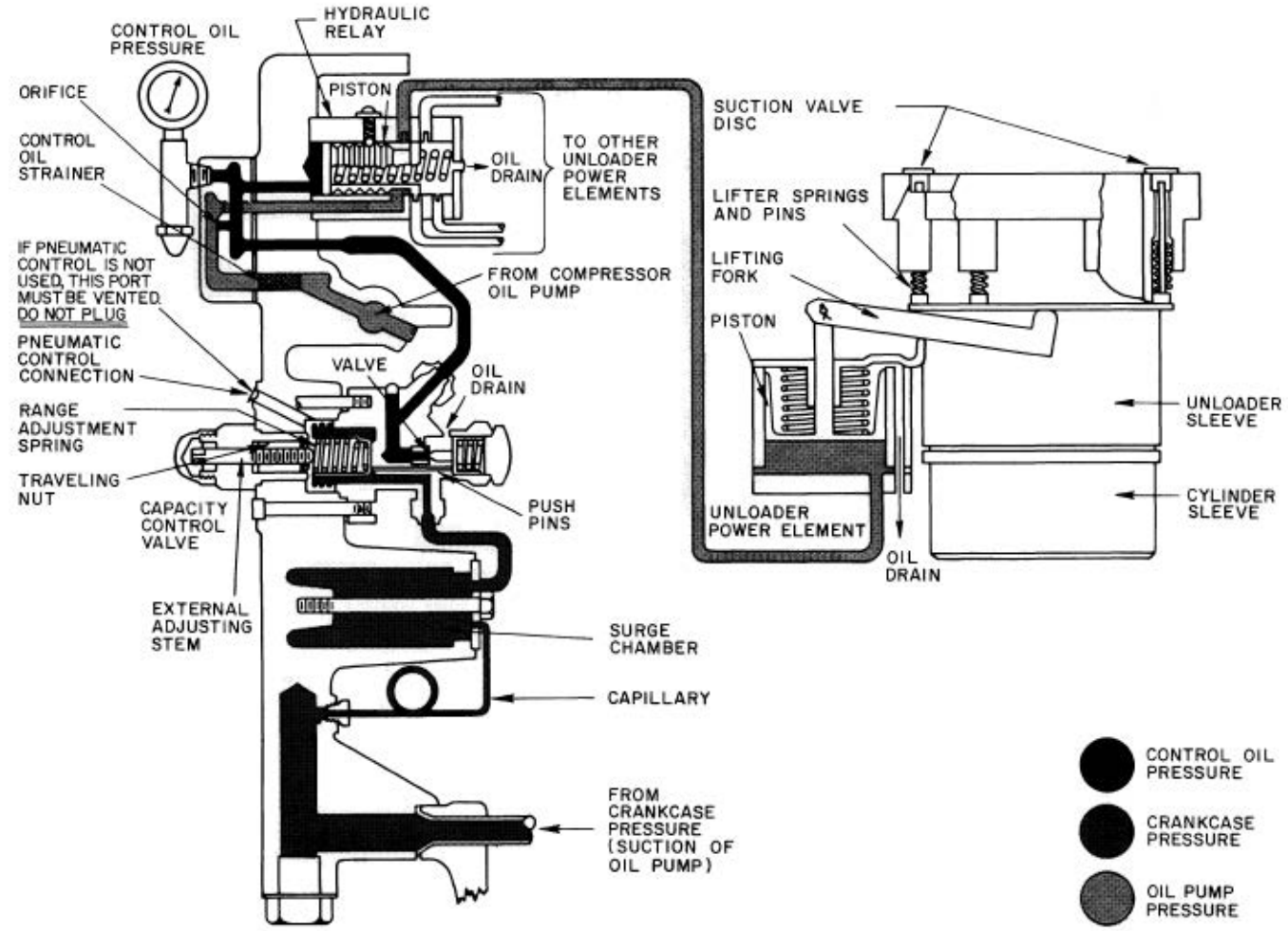

Fig. 44 — Capacity Control (5H120, 5H126)

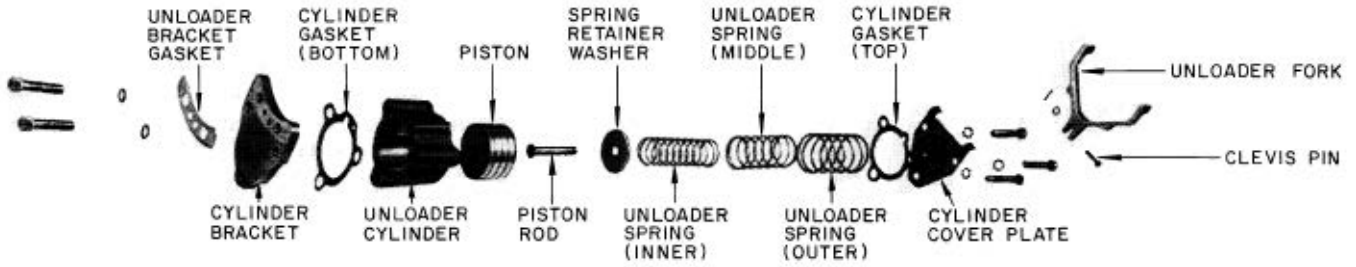

Fig. 45 — Unloader Power Element (Typical)

Unloaded Operation

A drop in suction pressure decreases pressure against control valve bellows. Range adjustment spring presses against the push pins, compressing the valve spring. This moves the needle valve off the seat.

Control oil bleeds from hydraulic relay and control valve to crankcase, relieving oil pressure on hydraulic pistons. The piston retracts, preventing transmission of pressurized oil to controlled cylinder power element(s), and the oil drains to crankcase.

As oil pump pressure on power element drops, the piston moves downward. Lifting fork(s) pivot(s) upward, moving lifting pins upward; suction valves rise from their seats and controlled cylinder(s) unload(s). It should be noted that a minimum of 33 to 35 pounds of oil pressure is required for proper unloader operation.

Capacity Control Inspection and Service

UNLOADER POWER ELEMENT REMOVAL

Remove cylinder head, valve plate, connecting rod, piston and cylinder sleeve. Remove Allen head cap screws (2) holding unloader power element in position.

Remove power element (Fig. 45) and disassemble. Check all parts for wear or damage.

POWER ELEMENT REPLACEMENT

Check unloader fork height (Fig. 46) of new or assembled power element.

Attach power element to internal suction manifold. Replace cylinder sleeve piston, connecting rod, valve plate, cylinder head and hand-hole cover.

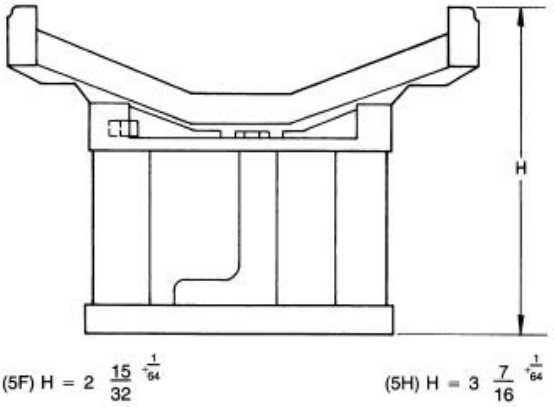

Fig. 46 — Unloader Fork Height (5F and 5H)

EXTERNAL ADJUSTING STEM REMOVAL does not require compressor to be pumped down. Loosen hex nut at valve stem base and remove adjusting stem assembly.

REMOVAL OF CAPACITY CONTROL VALVE AND HYDRAULIC RELAY

Assembly is located in hand-hole cover (Fig. 47) of 5F40 and 5F60 units; in pump-end cover (Fig. 48) of 5H40 through 86 units; and in pump-end bearing head (Fig. 49) of 5H120 and 126 units.

Remove capacity control valve and hydraulic relay.

NOTE: It is not practical to remove hydraulic relay from 5H40 through 5H86 compressors.

Inspect parts for wear, damage or evidence of leaking or sticking.

A new hand-hole cover, pump-end cover or pump-end bearing head with control valve assembly and hydraulic relay may be installed. However, capacity control valve (and hydraulic relay on 5H120 and 126 units) is available as a separate parts item for installation on original hand-hole cover, pump-end cover, or pump-end bearing head.

INSPECT CONTROL OIL STRAINER

On 5F compressors, the control oil strainer is located on the side of the pump-end bearing head (Fig. 29). Strainer is located behind the control oil pressure gage connection block on the 5H120 and 126 units (Fig. 26) and on pump-end cover (Fig. 48) of all other 5H compressors.

Remove strainer and inspect it for holes and dirt. Clean it with solvent and replace.

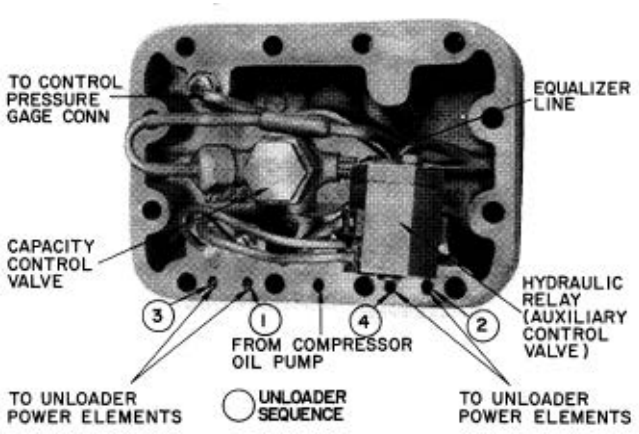

Fig. 47 — Compressor Hand-Hole Cover and Assembly (5F40 and 5F60)

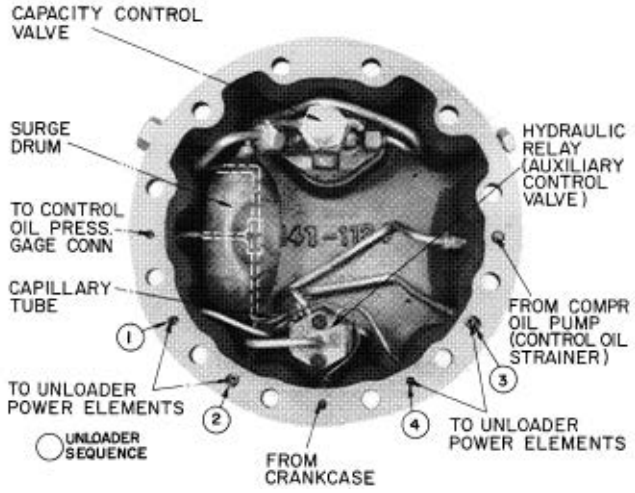

Fig. 48 — 5H Pump-End Cover and Control Assembly (5H40 through 86)

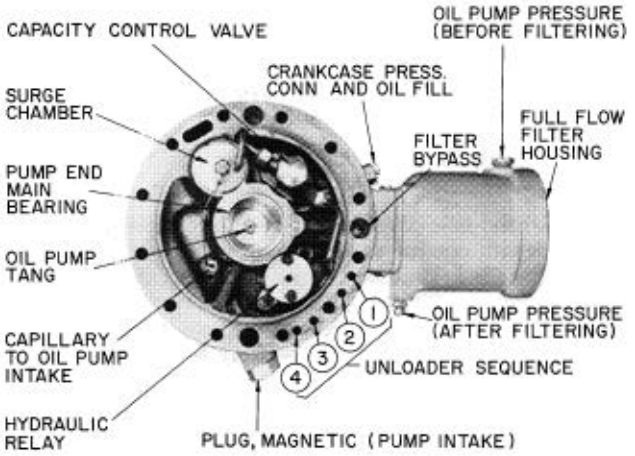

Fig. 49 — 5H120 and 126 Pump-End Bearing Head

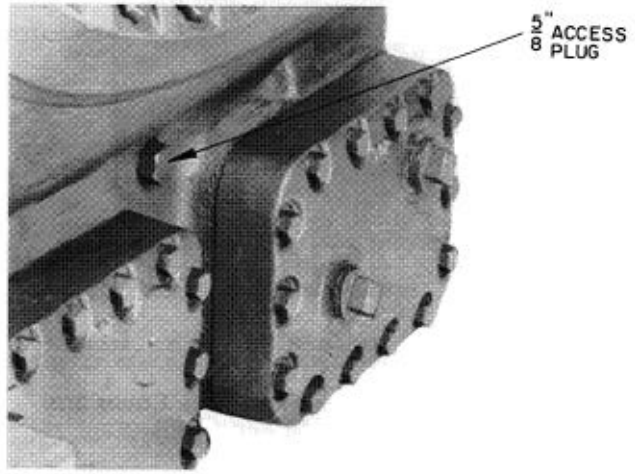

Fig. 50 — 5H80 through 126 Center Main Bearing Housing Setscrew Location

Crankshaft Inspection and Service

DISASSEMBLY

Remove cylinder heads, valve plates, connecting rod and piston assemblies, and pump-end main bearing head.

On 5H80 through 126 units, remove hollow-center main bearing lock screw located beneath plug (Fig. 50) and loosen hollow-cup setscrew (Fig. 51) until center main bearing can be slid from its

support. On 5H86, 120 and 126 units, disconnect oil line to center main bearing. Remove crankshaft through pump-end opening.

Normally it is not necessary to remove the oil separator impeller (Fig. 35) from the 5H120 or 126 shaft. If impeller must be removed for any reason, however, immerse it in hot water or oil until heated to 180°F or more. Remove all traces of water before reassembly. Do not heat impellers with torch.

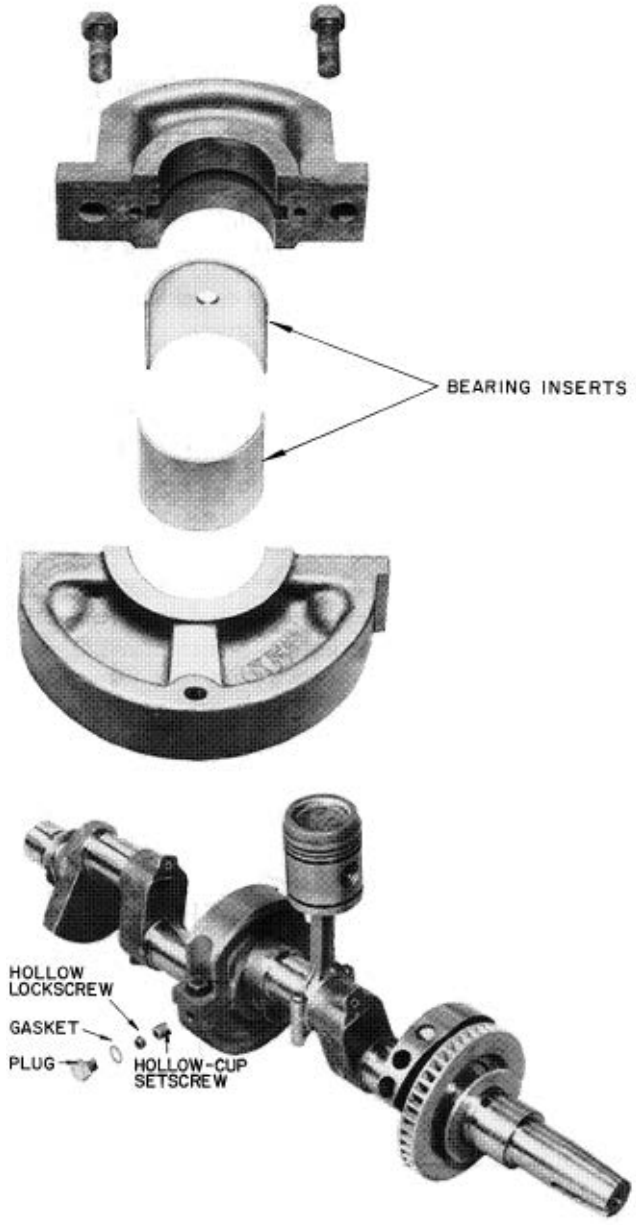

Fig. 51 — Center Main Bearing (5H120 and 126)

INSPECTION

Check crankshaft journals for wear and tolerances (Table 12). Remove crankshaft plugs, check oil passages and clean if clogged.

Connecting-rod bearing inserts and main bearings are available for crankshafts reground from 0.010-in., 0.020-in., or 0.030-in. undersized. Factory-reground crankshafts are stamped on both ends with an A (0.010-in. undersized), B (0.020-in. undersized), or C (0.030-in. undersized).

IMPORTANT: Do NOTE regrind crankshafts for 5H46, 66, 86, and 126 compressors in the field. Replace shafts with scored journals.

All instructions for field grinding apply only to standard stroke crankshafts.

On crankshafts reground locally, hold throw to 1.001 in. for 5F compressors and to 1.376 in. on 5H compressors. Stamp A or B on crankshaft and pump-end bearing head next to oil pressure gage connection.

To determine maximum and minimum journal diameters for undersized shafts, subtract the amount (in.) that the shaft will be ground undersize from factory from the tolerances specified in Table 11. For example, the factory tolerance for 5H40 seal-end journal is 2.6225 in. to 2.6235 inches. Tolerance for a crankshaft reground to 0.010 in. undersize should therefore be held between 2.6125 in. and 2.6135 inches.

IMPORTANT: When regrinding the seal-end journal on 5H120 crankshaft, do not grind in the area of the oil separator impeller. This is not journal area, and must remain intact or the oil separator impeller will not fit properly.

REASSEMBLY

If 5H120 or 5H126 oil separator has been removed, read impeller paragraph below before installing crankshaft.

When regrinding crankshaft, remove crankshaft plugs and clean oil passages as well. Before replacing crankshaft, insert and tighten plugs, and reinstall the 5H120 and 126 oil separator impeller:

1. Insert dowel key (Fig. 35) with axis parallel to axis of crankshaft. Position key so chamfered edge is toward radius of crankshaft journal.
2. Immerse oil separator impeller in oil or hot water to heat it to 180°F or more. If water is used, remove all traces before reassembly. Install impeller on crankshaft with dowel key lined up with impeller keyway. Impeller must fit key snugly.
3. Check that seal-end thrust washer is in place on dowel key in crankcase.

Insert crankshaft and install pump-end bearing head, connecting rod and piston assemblies, valve plate and cylinder heads. On 5H80 through 126 units, insert center main bearing setscrew and lock screw as described under Servicing Center Main Bearing. On 5H86, 120 and 126 units, reconnect oil line to center main bearing.

Pump-End Main Bearing (Fig. 52)

DISASSEMBLY AND INSPECTION

On 5H40 through 86 units, remove pump-end cover. Remove pump-end bearing head on all units. Inspect bearing for tolerances shown in Table 12. If a pump-end main bearing is worn, remove bronze bearing washer, and chisel out bearing. Inspect bearing housing for wear (Table 12) and damage. Remove any burrs.

REASSEMBLY

1. Lubricate outside of new bearing with heavy grease.
2. Line up hole in bearing with oil port in housing.
3. Press bearing into place using a puller shoulder (Table 13 and Fig. 53 and 54) and jack screw or bearing press.
4. Place bearing washer on bearing with notch in washer properly positioned around dowel pin (Fig. 52).

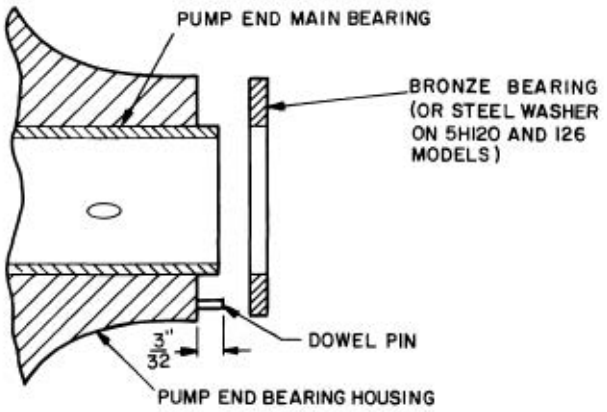

Fig. 52 — Pump-End Main Bearing Position

Table 13 — Main Bearing Puller Sizes

COMPRESSOR	PULLER SIZE
5F20, 5F30	5F20
5F40,5F60	5F40
5H40, 46, 60, 66, 80,86, 120,126	5H140

NOTE: Bearing pullers can be ordered through Carlyle or Totaline Parts.

Center Main Bearing

Size 5H80 through 126 compressors have a center main bearing and housing.

DISASSEMBLY AND INSPECTION

On 5H86, 120 and 126 compressors, disconnect oil line to center main bearing. (5H80 center main bearings are fed through the shaft.).

Remove plug on compressor crankcases (Fig. 50). Then remove hollow lock screw beneath the plug (Fig. 51). Next, loosen hollow-cup setscrew until center main bearing assembly can be slid from its support. Remove crankshaft and bearing assembly.

Disassemble bearing (Fig. 51) and inspect for proper tolerances (Table 12).

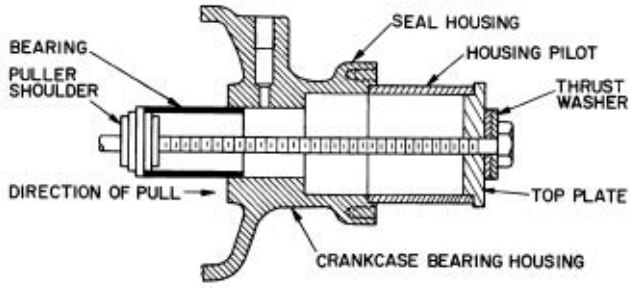

Fig. 53 — Seal-End Main Bearing (5F40, 60)

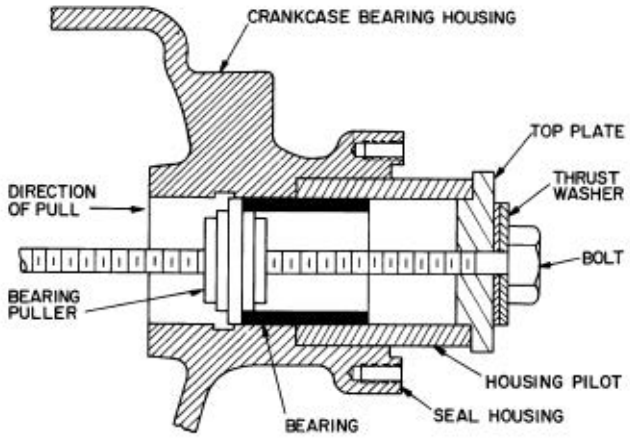

Fig. 54 — 5H Seal-End Main Bearing

REASSEMBLY

Install the new bearing inserts. Assemble bearing housing on crankshaft, but do not tighten the hollow-cup setscrews. Install crankshaft, center main bearing and housing, and pump-end main bearing assembly. Tighten bolts holding the pump-end main bearing assembly. Rotate crankshaft while tightening setscrew on center main bearing housing. Setscrew should tighten fully without any binding of crankshaft. If binding occurs, shim the opposite side of bearing housing, using 0.001-in. shim stock.

Seal-End Main Bearing

DISASSEMBLY AND INSPECTION

With crankshaft removed, use a bearing puller with a shouldering device to remove and install seal-end main bearings (Fig. 53 and 54). Bearing pullers can be ordered through Carlyle or Totaline Parts.

Inspect bearing and bearing housing for tolerances shown in Table 12.

REASSEMBLY

Remove any burrs and clean bearing housing before replacing bearing. Lubricate outside of bearing with heavy grease.

1. Position bearing so chamfered edge enters bearing housing first, oil holes in bearing and housing are aligned (see note below), and bearing relief groove is at top.

   NOTE: On size 5H 120 and 126 compressors oil hole in bearing and housing will not be aligned.
2. Pull bearing into housing (Fig. 55). Edge of bearing should be $^{1}/_{32}$-in. below surface of bronze bearing washer.
3. Look through oil pressure regulator opening to check oil passage for blockage.
4. Blow out oil groove in bearing housing and oil lines (if any) to it.

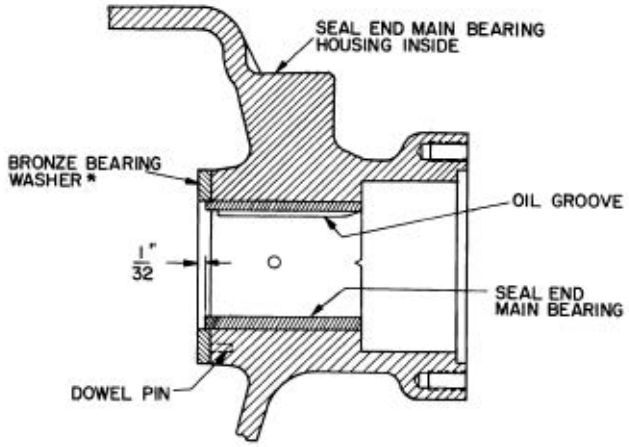

*Steel washer on 5H120 and 126 models.

Fig. 55 — Seal-End Main Bearing Positioning

Crankshaft Seal Inspection and Replacement

The crankshaft seal in all current 5F,H compressors is a rotating, bellows-type seal. This seal is the service replacement for all earlier seal assemblies. Figure 56 shows Types I and II of this design (5F20 through 60 and 5H40 through 5H126 compressors).

IMPORTANT: Do not attempt to repair or replace seal components. Replace complete seal assembly with current rotating-bellows-type assembly. Do not disassemble bellows assembly of service replacement seal.

BEFORE INSTALLING SEAL

1. Pump-end bearing head must be in place for proper positioning of seal on crankshaft.
2. Be sure shaft extension and edges of keyway are free of sharp edges and nicks. Also, shaft must be clean and free of rust. Polish shaft with crocus cloth.
3. Check seal assembly for proper bellows placement and cleanliness.
4. Apply compressor oil to seal assembly and crankshaft, completely saturating bellows and carbon ring.

INSTALLATION

Refer to Fig. 57 for procedure.

Accessories

For accessory installation literature, refer to Table 14.

Table 14 — Accessory Literature

ACCESSORY	LITERATURE AVAILABLE
Condensing Unit Piping	Installation Instructions*
Accessory Control Panel	
Accessory Compressor Crankcase Heater	
Accessory Belt Drive Package	
Flexible Couplings for Direct-Drive Units	
Water-Cooled Condensers	
Accessory Water-Cooled Heads Package	
Accessory Oil Filter Package	
Accessory Oil Cooler	
Accessory Oil Safety Switch Package	
Capacity Control Valve	
Accessory Unloader Package	
Accessory Muffler Package	

*See your Carlyle Distributor for current form numbers.

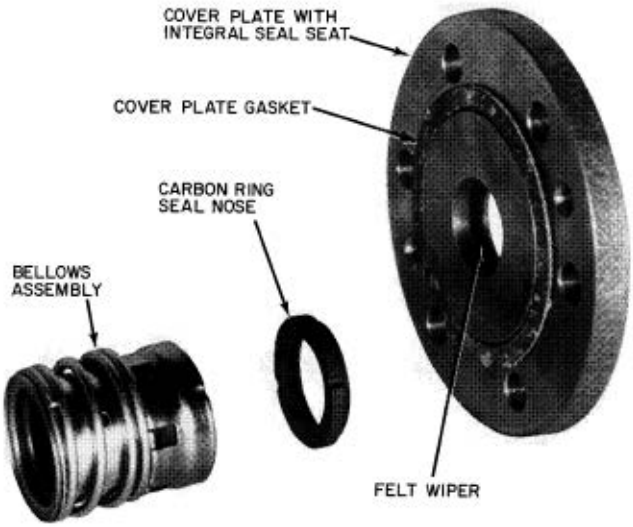

A — 5F20, 30 (Type I)

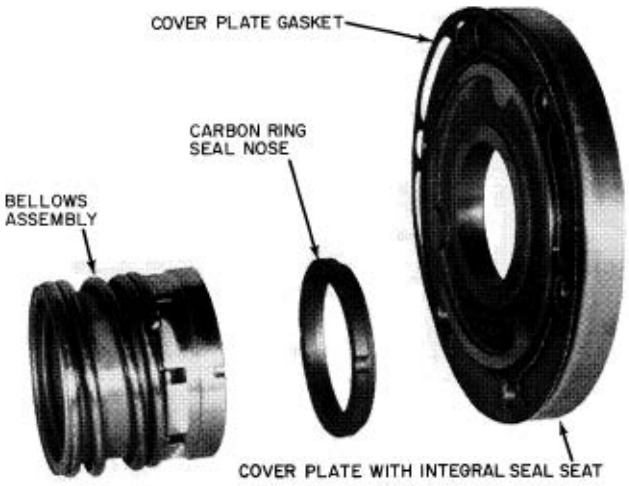

B — 5F40, 60 AND 5H40 THROUGH 86* (Type I) — Typical

*F540 and 60 — 1.5" diameter; 5H40 through 86 — 2.0" diameter.

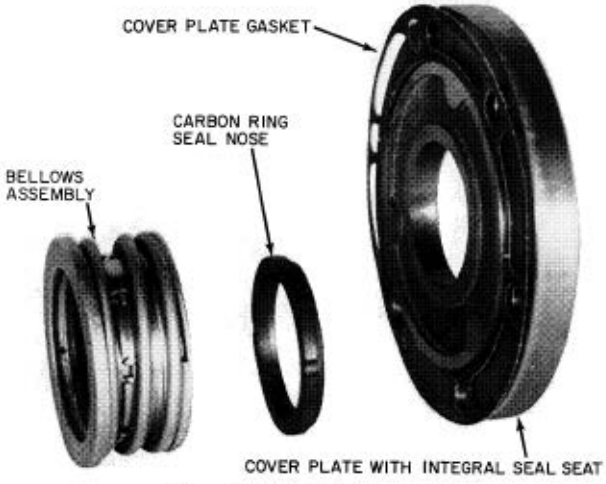

C — 5H120, 126 (Type II)

Fig. 56 — Service Replacement Seals

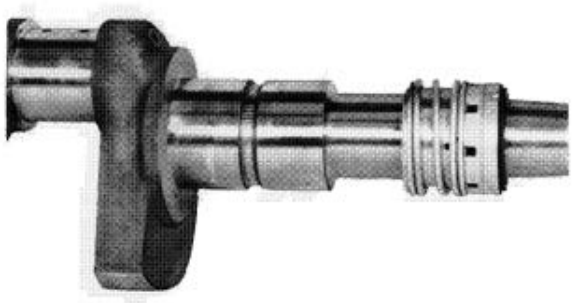

Step 1 — Lubricate the shaft and the neoprene bellows where it comes in contact with the shaft. Slide the seal assembly, as it is shipped from the factory, onto the shaft until the neoprene just starts to grasp the shaft.

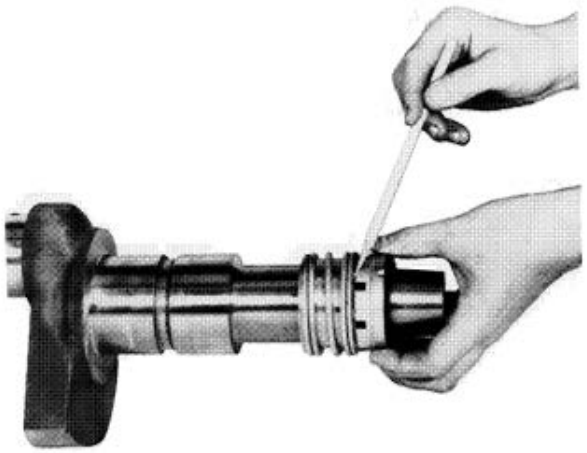

Step 2 — Holding the sleeve and spring assembly, pull forward on the seal nose assembly at the same time, turning it so that the lugs on the driving band are out of the slots in the remainer shell and rest on the surface of the retainer shell as shown by the pencil. (This does not apply to the 5H120 Type II seal. Lugs are permanently fixed.)

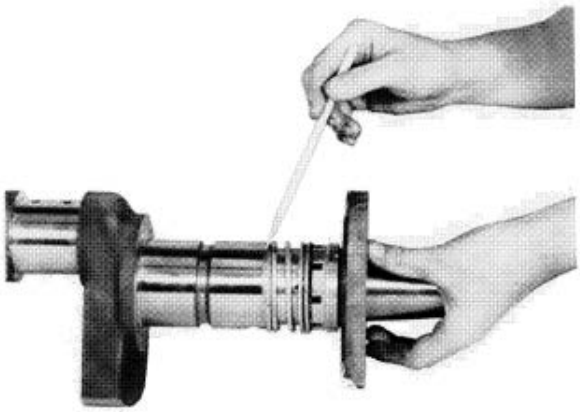

Step 3 — Using the seal cover plate, push the seal assembly into its proper location on the shaft. DO NOT use cover plate bolts to push seal into position. The spring guide should be tight against the shaft shoulder as shown by the pencil. Remove the cover plate, being careful not to damage the carbon washer. GRASP THE SEAL NOSE ASSEMBLY AND TURN IT UNTIL THE LUGS ON THE DRIVING BAND DROP BACK INTO THE SLOTS IN THE RETAINER SHELL.

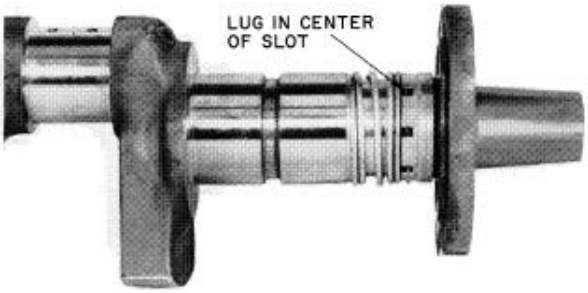

Step 4 — Lubricate the carbon seal washer and seal seat. Reinstall the seal cover plate, drawing the bolts down evenly to prevent damage to the carbon seal nose. This view shows the lugs of the driving band properly positioned in the center of the slots in the seal retainer shell. This is the correct position during operation. This prevents the seal from being used as a thrust washer under all operating conditions.

NOTE: The seal may leak slightly immediately after installation, but a short period of operation will correct the condition.

Fig. 57 — Installation of Sleeve-Type Rotary Seal

TROUBLESHOOTING

TROUBLE/SYMPTOM	PROBABLE CAUSE	REMEDY
Compressor will not start	Power off.	Check main switch, fuse and wiring.
	Thermostat set too high.	Reset thermostat.
	Thermal overload switch open.	Reset switch.
	Oil safety switch open.	Reset switch.
	Dirty contacts.	Clean all control contacts.
	Loose electrical connections or faulty wiring.	Tighten connections; check wiring and rewire.
	Compressor motor burned out.	Check and replace if defective.
	Liquid line solenoid valve closed.	Check for burned-out holding coil. Replace if defective.
	Evaporator fan off.	Check fuses, overload. Restart.
	Evaporative condenser or cooling tower fan or pump not operating.	Check fuses, overloads and controls. Restart.
Compressor cycles intermittently	Low-pressure switch erratic in operation.	Check for clogged tubing to switch. Check switch setting.
	Low refrigerant charge.	Add refrigerant.
	Capacity control setting incorrect.	Reset.
	Thermostat differential too narrow.	Reset.
	Suction valve closed or throttled.	Open up valve.
Compressor cycles on high pressurestat	Tubing to pressurestat restricted.	Check and clean tubing.
	Faulty pressurestat.	Repair or replace.
	Refrigerant overcharge.	Remove excess refrigerant.
	Insufficient condenser water flow or clogged condenser.	Adjust water regulating valve to condenser. Clean condenser.
	Discharge service valve not fully open.	Open valve.
	Air in system.	Purge air.
	Condenser water pump off.	Check pump and start.
High discharge pressure	Condenser inlet water temperature too high.	Increase water quantity by adjusting water regulating valve. Use colder water.
	Insufficient water flow through condenser.	Readjust water regulating valve. Increase size of water supply main to condenser.
	Plugged or scaled condenser tubes.	Clean tubes.
	Discharge service valve partially closed.	Open valve.
	Refrigerant overcharge.	Remove excess refrigerant.
	Air in system.	Purge air.
Low discharge pressure	Excessive water flow through condenser.	Adjust water regulating valve.
	Suction service valve partially closed.	Open valve.
	Leaky compressor suction valves.	Examine valve discs and valve seats. Replace if worn.
	Worn piston rings.	Replace.
Flooding	Defective or improperly set expansion valve.	Reset to 5°F - 10°F superheat. Valve operation must be stable (no hunting).
Low suction pressure	Low refrigerant charge.	Add refrigerant.
	Excessive superheat.	Reset expansion valves.
System noises	Loose or misaligned coupling.	Check alignment and tightness.
	Insufficient clearance between piston and valve plate.	Replace defective parts.
	Motor or compressor bearing worn.	Replace bearings.
	Loose or misaligned belts.	Check alignment and tension. (Belt slack should be at top.)
	Loose holddown bolts.	Tighten bolts.
	Unit foundation improperly isolated.	Isolate foundation.
	Improper support or isolation of piping.	Use correct piping techniques and support piping with suitable hangers.
	Slugging from refrigerant feedback.	Check expansion valve setting. Check thermal bulb looseness and correct location. See Carlyle System Design Manual, Part 3 for standard piping techniques.
	Hydraulic knock from excessive oil in circulation.	Remove excess oil. Check expansion valve for floodback.
	Defective valve lifter mechanism (noise level varies with unloading).	Replace sticking filter pins. Check unloader fork for alignment. Check power element for sticking piston. Check for oil leakage at tube connection to power element. Check amount of valve pin lift above valve seat (0.33 in. for 5F; 0.125 in. for 5H).
	Piping vibration.	Support pipes are required. Check pipe connections.
	No muffler in discharge line or improperly located.	Install muffler. Move muffler closer to compressor.
	Hissing (insufficient flow through expansion valves, or clogged liquid line strainer).	Add refrigerant. Clean strainer.

TROUBLESHOOTING (CONT)

TROUBLE/SYMPTOM	PROBABLE CAUSE	REMEDY
Compressor will not unload	Capacity control valve not operating.	Repair.
	Unloader element sticking.	Repair.
	Hydraulic relay sticking.	Replace control cover assembly.
	Plugged pressure line to power element.	Clean line.
	External adjusting stem damaged.	Replace.
Compressor will not load	Low oil pressure (below 35 psig).	Check oil charge, switch settings.
	Capacity control valve stuck open.	Repair or replace.
	Unloader element sticking.	Repair.
	Plugged or broken pressure line to power element.	Clean or repair.
	External adjusting stem damaged.	Replace.
	Control oil strainer blocked.	Clean or replace.
	Control valve bellows leaking.	Remove thread protector and leak test.
		Replace valve body if bellows leaks.
	Pipe plug in pneumatic connection.	Remove pipe plug.
	Foaming in crankcase from refrigerant flooding.	Check expansion valve and piping.
	Hydraulic relay sticking.	Replace control cover assembly.
Rapid unloader cycling	Excessive fluctuation in suction pressure from oversized expansion valve.	Resize expansion valve.
	Partially plugged control oil strainer.	Clean or replace strainer.
	Low oil pressure.	See Trouble/Symptom - low oil pressure.
Low oil pressure	Low oil charge.	Add oil.
	Faulty oil gage.	Check and replace.
	Defective oil pressure regulator.	Repair or replace.
	Clogged oil suction strainer.	Clean strainer.
	Broken oil pump tang.	Replace pump assembly.
	Clogged oil line.	Remove obstruction.
	Worn oil pump.	Replace pump assembly.
	Worn compressor bearings.	Replace.
Cold compressor	Liquid carryover from evaporator.	Check refrigerant charge and expansion valves.
Low crankcase oil level	Oil return check valve stuck closed.	Repair or replace check valve.
Cylinders and crankcase sweating	Refrigerant floodback.	Check refrigerant charge and expansion valves.
High crankcase temperature (should be 150°F to 160°F max. at seal housing)	Liquid line strainer clogged.	Clean strainer.
	Excessive superheat.	Reset expansion valves.
	Compression ratio too high.	Recheck design.
	Discharge temperature over 275°F.	Check unit application.
	Leaking suction or discharge valves.	Replace valves.

© 2021 Carrier