CARLYLE SEMI-HERMETIC COMPRESSORS

Carlyle 06D Compressor Drawings

2 Cylinder

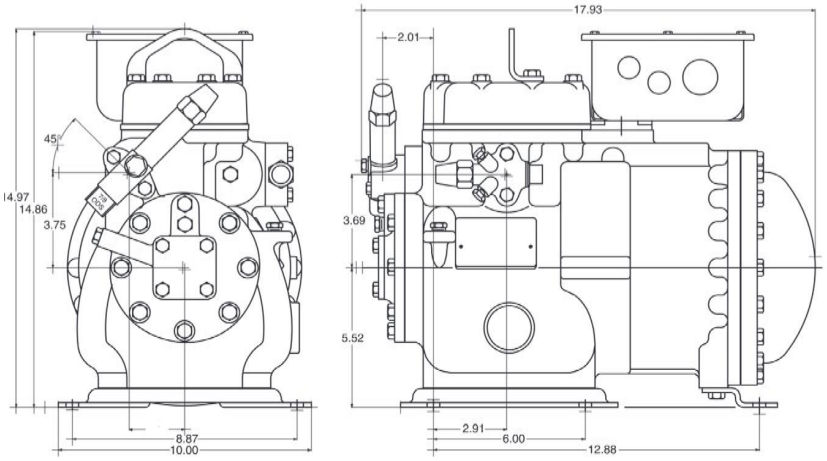

CYLINDERS: 2
CFM: 8
MODELS: 06DA808
06DM808
UNLOADING AVAIL: NO
STEPS: 0

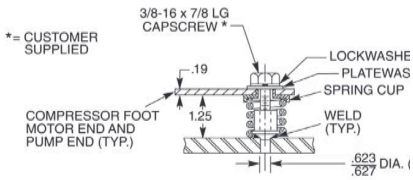

SPRING MOUNTING ARRANGEMEN

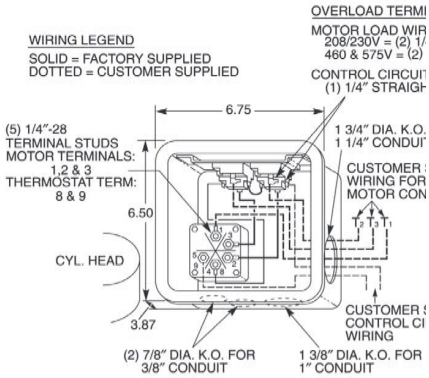

TERMINAL BOX DATA

NOTE: ALL DIMENSION ARE IN INCHES
Multiple Service valve orientation are possible

Note: Compressors shown with optional accessories.