Specification

Compression Type	Scroll Compressor	Refrigerant	R410A
Speed	Fixed	Power Source	460V / 60Hz
Application1	Air conditioning - Unitary	Application2	
Application3		Application4	
Application5			

Performance

Capacity[BTU/HR]	41,500	Input [Watts]	3952
EER[BTU/W.HR]	10.50	Noise [dB]	76
Vibration [um]	50	RPM	

Mechanical

Displacement [cm3 / rev]	40	Weight [kg]	32 kg
Compressor Cooling			

Electrical

Starting Capacitor [MFD/VAC]		Running Current	
Protection Type	Internal OLP	Max Continuous Current [A]	9.3
Lock Rotor Ampere [A]	60	Running Capacitor [MFD/VAC]	N/A
Rated Revolution		Max Continuous Ampere	
Max Operation Current		OLP	
Capacitor		Motor Type	
Starting Torque			

Test Condition	ARI		
Evaporating Temperature[°C]		Condensing Temperature[°C]	
Subcooled Temperature[°C]		Superheated Temperature[°C]	
Ambient Temperaturee[°C]			°

Standard	UL/VDE		

bpp.cpc.copyright

Performance

bpp.cpc.copyright

Drawing

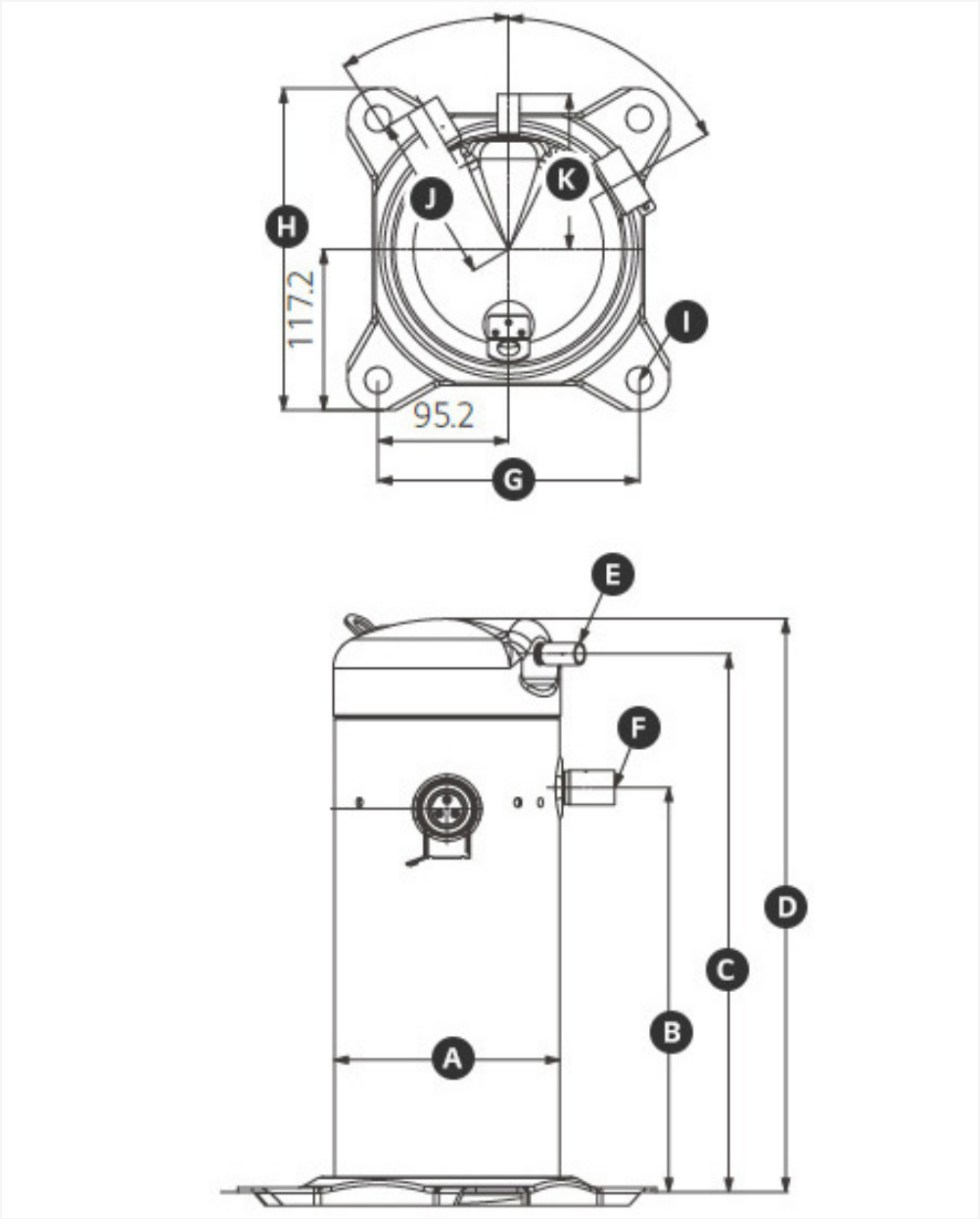

A(ø)	164.6
B(mm)	295
C(mm)	394
D(mm)	419
E(I.D ø)	12.7-12.9
F(I.D ø)	22.3-22.5
G(mm)	190.5
H(mm)	234.5
I(ø)	19

bpp.cpc.copyright

Operation Envelop

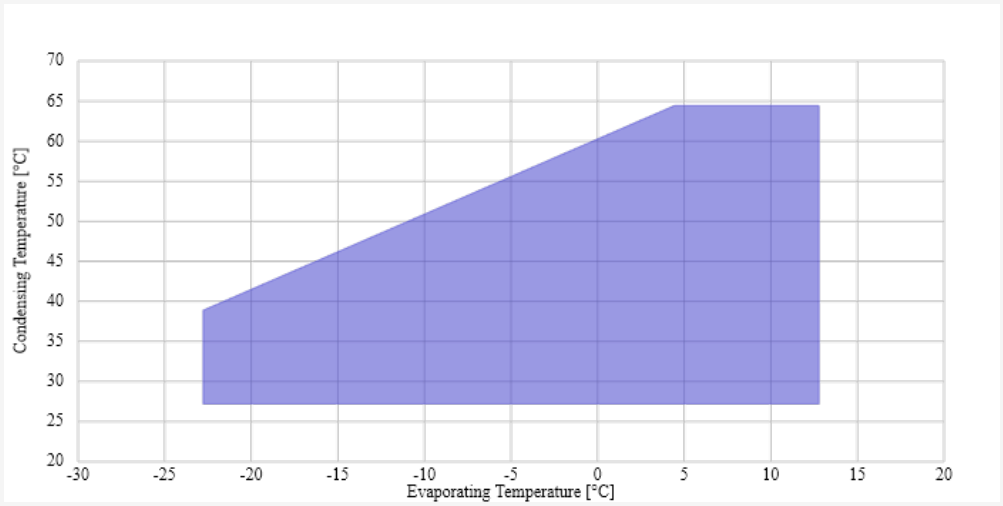

R410A

bpp.cpc.copyright