Specification

Compression Type	Scroll Compressor	Refrigerant	R410A
Speed	Fixed	Power Source	208-230V / 60Hz
Application1	Air conditioning - Unitary	Application2	
Application3		Application4	
Application5			

Performance

Capacity[BTU/HR]	41,500	Input [Watts]	3952
EER[BTU/W.HR]	10.50	Noise [dB]	76
Vibration [um]	50	RPM	

Mechanical

Displacement [cm3 / rev]	40	Weight [kg]	31.9 kg
Compressor Cooling			

Electrical

Starting Capacitor [MFD/VAC]		Running Current	
Protection Type	Internal OLP	Max Continuous Current [A]	16.3
Lock Rotor Ampere [A]	123	Running Capacitor [MFD/VAC]	N/A
Rated Revolution		Max Continuous Ampere	
Max Operation Current		OLP	
Capacitor		Motor Type	
Starting Torque			

Test Condition	ARI		
Evaporating Temperature[°C]		Condensing Temperature[°C]	
Subcooled Temperature[°C]		Superheated Temperature[°C]	
Ambient Temperaturee[°C]			°

Standard	UL		

bpp.cpc.copyright

Performance

RATING CONDITIONS

20 °F Superheat | 15 °F Sub Cooling
95 °F Ambient Air Over | 60 Hz Operation

RATED PERFORMANCE
SCROLL COMPRESSOR | **ABG042RA** | R410A

CAPACITY (BTU/HR)

Condensing Temperature		Evaporating Temperature °F (°C)									
		-10	-5	0	10	20	30	40	45	50	55
°F	(°C)	(-23)	(-20.5)	(-17.7)	(-12.2)	(-6.7)	(-1.1)	(4.4)	(7.2)	(10.0)	(12.8)
80	(26.7)	17,300	19,600	22,200	28,200	35,300	43,600	53,200	58,400	64,100	70,100
90	(32.2)	15,600	17,900	20,400	26,200	33,000	41,000	50,200	55,300	60,700	66,400
100	(37.8)	13,900	16,100	18,600	24,100	30,700	38,300	47,100	52,000	57,100	62,600
110	(43.3)			16,600	22,000	28,300	35,600	44,000	48,600	53,500	58,800
120	(48.9)				19,700	25,700	32,700	40,700	45,100	49,800	54,800
130	(54.4)					23,100	29,700	37,300	41,500	46,000	50,700
140	(60.0)						26,600	33,800	37,800	42,000	46,500
150	(65.6)							30,200	33,900	37,900	42,100

EER (BTU/WATT-HR)

Condensing Temperature		Evaporating Temperature °F (°C)									
		-10	-5	0	10	20	30	40	45	50	55
°F	(°C)	(-23)	(-20.5)	(-17.7)	(-12.2)	(-6.7)	(-1.1)	(4.4)	(7.2)	(10.0)	(12.8)
80	(26.7)	7.9	9.0	10.3	13.2	16.9	21.4	26.7	29.8	33.0	36.7
90	(32.2)	6.2	7.2	8.2	10.7	13.6	17.2	21.5	23.9	26.6	29.4
100	(37.8)	4.9	5.7	6.5	8.6	11.0	14.0	17.6	19.5	21.7	24.0
110	(43.3)			5.1	6.9	8.9	11.4	14.3	16.0	17.8	19.7
120	(48.9)				5.4	7.1	9.2	11.6	13.0	14.5	16.1
130	(54.4)					5.6	7.3	9.3	10.5	11.8	13.1
140	(60.0)						5.7	7.4	8.4	9.4	10.5
150	(65.6)							5.8	6.5	7.4	8.3

POWER (WATTS)

Condensing Temperature		Evaporating Temperature °F (°C)									
		-10	-5	0	10	20	30	40	45	50	55
°F	(°C)	(-23)	(-20.5)	(-17.7)	(-12.2)	(-6.7)	(-1.1)	(4.4)	(7.2)	(10.0)	(12.8)
80	(26.7)	2,180	2,170	2,160	2,130	2,090	2,040	1,990	1,960	1,940	1,910
90	(32.2)	2,500	2,490	2,490	2,460	2,420	2,380	2,330	2,310	2,280	2,260
100	(37.8)	2,850	2,840	2,840	2,810	2,780	2,730	2,680	2,660	2,630	2,610
110	(43.3)			3,240	3,210	3,170	3,120	3,070	3,040	3,010	2,980
120	(48.9)				3,660	3,620	3,560	3,500	3,460	3,430	3,400
130	(54.4)					4,130	4,070	3,990	3,950	3,910	3,870
140	(60.0)						4,660	4,570	4,520	4,470	4,420
150	(65.6)							5,240	5,180	5,120	5,060

CURRENT (AMPS) @ 230 VOLTS

Condensing Temperature		Evaporating Temperature °F (°C)									
		-10	-5	0	10	20	30	40	45	50	55
°F	(°C)	(-23)	(-20.5)	(-17.7)	(-12.2)	(-6.7)	(-1.1)	(4.4)	(7.2)	(10.0)	(12.8)
80	(26.7)	6.8	6.8	6.8	6.7	6.6	6.5	6.5	6.5	6.5	6.5
90	(32.2)	7.5	7.5	7.5	7.4	7.3	7.2	7.2	7.1	7.1	7.2
100	(37.8)	8.3	8.3	8.3	8.3	8.2	8.1	8.0	8.0	7.9	8.0
110	(43.3)			9.4	9.3	9.2	9.1	9.0	8.9	8.9	8.9
120	(48.9)				10.5	10.4	10.2	10.1	10.0	10.0	9.9
130	(54.4)					11.8	11.6	11.4	11.3	11.2	11.2
140	(60.0)						13.1	12.8	12.7	12.6	12.6
150	(65.6)							14.5	14.4	14.3	14.1

MASS FLOW (LBS/HR)

Condensing Temperature		Evaporating Temperature °F (°C)									
		-10	-5	0	10	20	30	40	45	50	55
°F	(°C)	(-23)	(-20.5)	(-17.7)	(-12.2)	(-6.7)	(-1.1)	(4.4)	(7.2)	(10.0)	(12.8)
80	(26.7)	205.0	230.0	260.0	330.0	410.0	500.0	600.0	650.0	710.0	780.0
90	(32.2)	200.0	220.0	250.0	320.0	400.0	490.0	590.0	650.0	710.0	770.0
100	(37.8)	180.0	210.0	240.0	310.0	390.0	480.0	580.0	640.0	700.0	760.0
110	(43.3)			230.0	300.0	380.0	470.0	570.0	630.0	690.0	760.0
120	(48.9)				280.0	370.0	460.0	560.0	620.0	680.0	750.0
130	(54.4)					350.0	440.0	550.0	610.0	670.0	740.0
140	(60.0)						430.0	540.0	600.0	660.0	730.0
150	(65.6)							520.0	580.0	650.0	710.0

Nominal Performance Values (±5%) based on minimum 72 hours run-in. Subject to change without notice.

bpp.cpc.copyright

Drawing

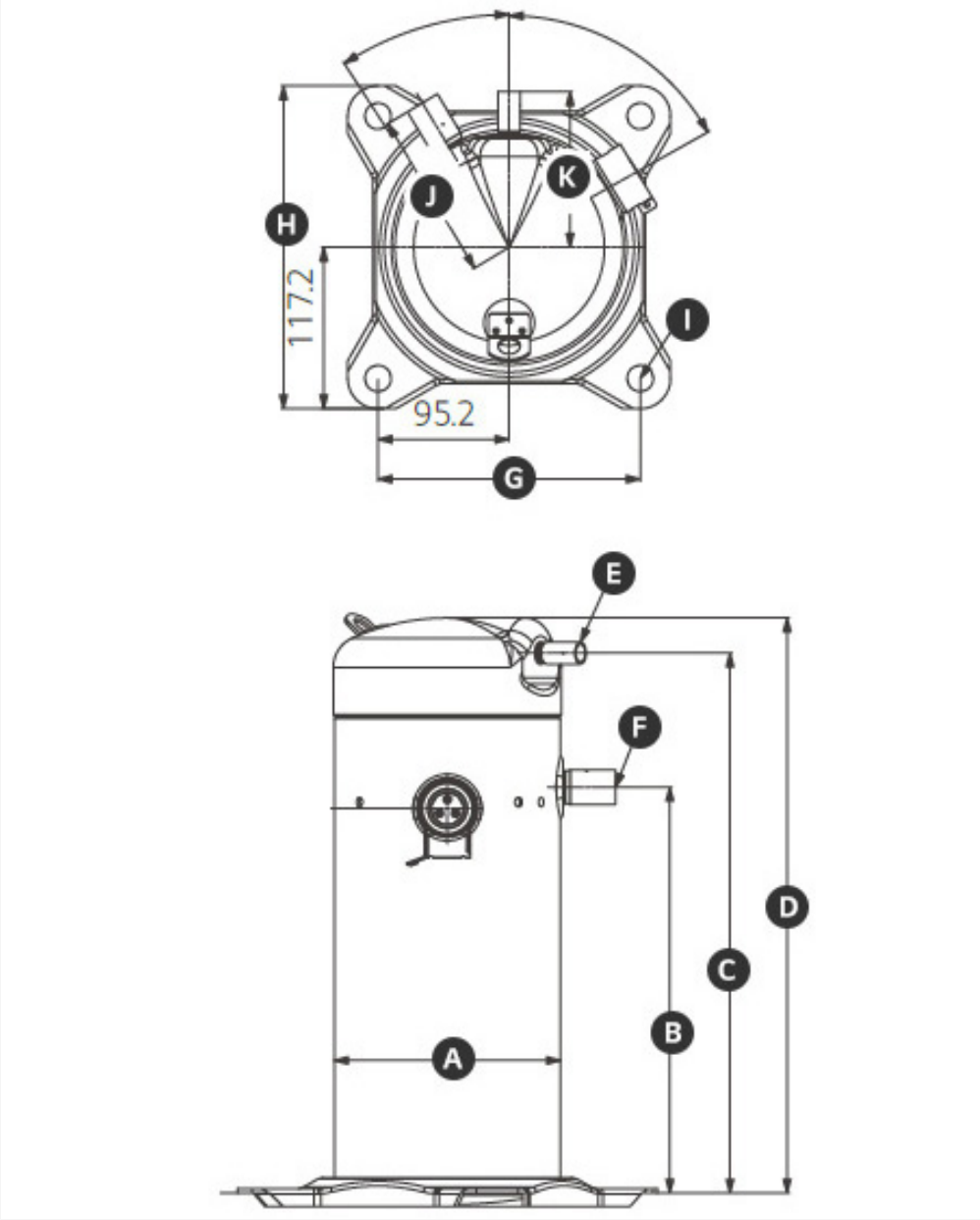

A(ø)	164.6
B(mm)	295
C(mm)	394
D(mm)	419
E(I.D ø)	12.7-12.9
F(I.D ø)	22.3-22.5
G(mm)	190.5
H(mm)	234.5
I(ø)	19

bpp.cpc.copyright

Operation Envelop

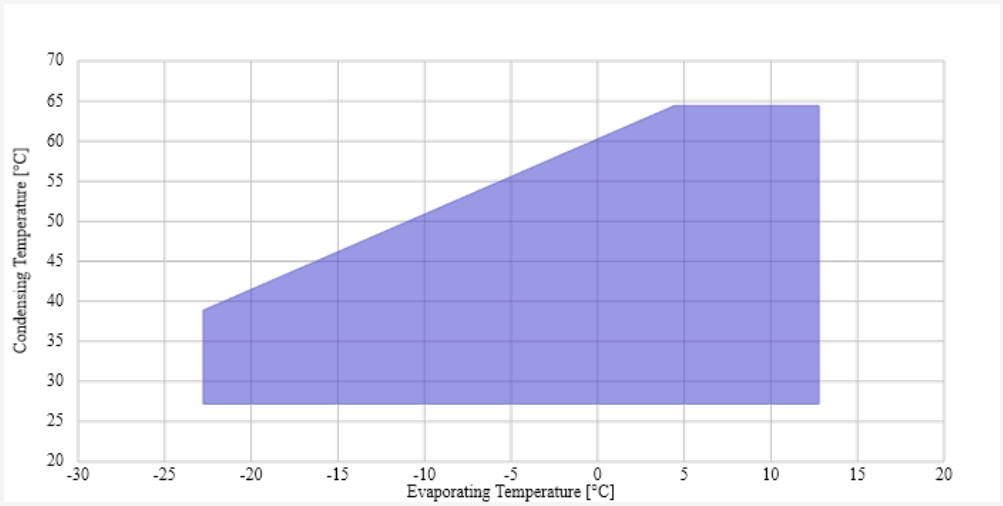

R410A

bpp.cpc.copyright