Specification

Compression Type	Scroll Compressor	Refrigerant	R410A
Speed	Fixed	Power Source	208-230V / 60Hz
Application1	Air conditioning - Unitary	Application2	
Application3		Application4	
Application5			

Performance

Capacity[BTU/HR]	49,400	Input [Watts]	4574
EER[BTU/W.HR]	10.80	Noise [dB]	75
Vibration [um]	50	RPM	

Mechanical

Displacement [cm3 / rev]	46.6	Weight [kg]	32.2 kg
Compressor Cooling			

Electrical

Starting Capacitor [MFD/VAC]		Running Current	
Protection Type	Internal OLP	Max Continuous Current [A]	32.5
Lock Rotor Ampere [A]	127.1	Running Capacitor [MFD/VAC]	70/440
Rated Revolution		Max Continuous Ampere	
Max Operation Current		OLP	
Capacitor		Motor Type	
Starting Torque			

Test Condition	ARI		
Evaporating Temperature[°C]		Condensing Temperature[°C]	
Subcooled Temperature[°C]		Superheated Temperature[°C]	
Ambient Temperaturee[°C]			°

Standard	UL		

bpp.cpc.copyright

Performance

RATING CONDITIONS

20 °F Superheat | 15 °F Sub Cooling
95 °F Ambient Air Over | 60 Hz Operation

RATED PERFORMANCE
SCROLL COMPRESSOR | **ABG049KA** | R410A

CAPACITY (BTU/HR)

Condensing Temperature		Evaporating Temperature °F (°C)									
		-10	-5	0	10	20	30	40	45	50	55
°F	(°C)	(-23)	(-20.5)	(-17.7)	(-12.2)	(-6.7)	(-1.1)	(4.4)	(7.2)	(10.0)	(12.8)
80	(26.7)	20,578	23,200	26,200	33,100	41,200	50,700	61,600	67,600	73,900	80,600
90	(32.2)	19,200	21,800	24,700	31,400	39,300	48,500	59,000	64,700	70,800	77,300
100	(37.8)	17,500	20,000	22,800	29,300	36,900	45,700	55,800	61,400	67,200	73,400
110	(43.3)			20,800	27,000	34,200	42,700	52,300	57,600	63,212	69,100
115	(48.9)				25,800	32,900	41,100	50,500	55,600	61,100	66,900
130	(54.4)					28,600	36,100	44,700	49,400	54,400	59,700
140	(60.0)						32,800	40,800	45,200	49,800	54,800
150	(65.6)							37,000	41,000	45,300	49,900

EER (BTU/WATT-HR)

Condensing Temperature		Evaporating Temperature °F (°C)									
		-10	-5	0	10	20	30	40	45	50	55
°F	(°C)	(-23)	(-20.5)	(-17.7)	(-12.2)	(-6.7)	(-1.1)	(4.4)	(7.2)	(10.0)	(12.8)
80	(26.7)	8.0	9.1	10.4	13.3	16.7	21.0	26.1	29.1	32.7	37.0
90	(32.2)	6.6	7.5	8.5	10.9	13.7	17.1	21.2	23.6	26.4	29.6
100	(37.8)	5.4	6.1	7.0	9.0	11.4	14.1	17.5	19.6	21.8	24.4
110	(43.3)			5.7	7.4	9.4	11.7	14.5	16.2	18.1	20.2
115	(48.9)				6.7	8.5	10.6	13.2	14.7	16.4	18.3
130	(54.4)					6.1	7.7	9.7	10.8	12.0	13.4
140	(60.0)						6.1	7.7	8.6	9.6	10.7
150	(65.6)							6.0	6.7	7.5	8.4

POWER (WATTS)

Condensing Temperature		Evaporating Temperature °F (°C)									
		-10	-5	0	10	20	30	40	45	50	55
°F	(°C)	(-23)	(-20.5)	(-17.7)	(-12.2)	(-6.7)	(-1.1)	(4.4)	(7.2)	(10.0)	(12.8)
80	(26.7)	2,580	2,540	2,520	2,480	2,460	2,420	2,360	2,320	2,260	2,180
90	(32.2)	2,930	2,910	2,890	2,870	2,860	2,840	2,780	2,740	2,680	2,610
100	(37.8)	3,270	3,260	3,250	3,250	3,250	3,230	3,180	3,140	3,080	3,010
110	(43.3)			3,630	3,640	3,650	3,640	3,600	3,560	3,498	3,420
115	(48.9)				3,860	3,870	3,870	3,820	3,780	3,720	3,650
130	(54.4)					4,670	4,670	4,620	4,580	4,520	4,440
140	(60.0)						5,350	5,310	5,260	5,200	5,120
150	(65.6)							6,160	6,110	6,040	5,950

CURRENT (AMPS) @ 230 VOLTS

Condensing Temperature		Evaporating Temperature °F (°C)									
		-10	-5	0	10	20	30	40	45	50	55
°F	(°C)	(-23)	(-20.5)	(-17.7)	(-12.2)	(-6.7)	(-1.1)	(4.4)	(7.2)	(10.0)	(12.8)
80	(26.7)	12.2	12.0	11.8	11.7	11.5	11.4	11.2	11.0	10.7	10.4
90	(32.2)	13.6	13.5	13.4	13.3	13.3	13.2	13.1	12.9	12.7	12.4
100	(37.8)	14.8	14.8	14.8	14.8	14.9	14.9	14.7	14.6	14.3	14.0
110	(43.3)			16.2	16.4	16.5	16.5	16.4	16.2	16.0	15.7
115	(48.9)				17.2	17.4	17.4	17.3	17.2	16.9	16.6
130	(54.4)					20.8	20.9	20.7	20.6	20.3	19.9
140	(60.0)						24.0	23.9	23.7	23.4	23.0
150	(65.6)							28.0	27.8	27.4	27.0

MASS FLOW (LBS/HR)

Condensing Temperature		Evaporating Temperature °F (°C)									
		-10	-5	0	10	20	30	40	45	50	55
°F	(°C)	(-23)	(-20.5)	(-17.7)	(-12.2)	(-6.7)	(-1.1)	(4.4)	(7.2)	(10.0)	(12.8)
80	(26.7)	248.0	280.0	310.0	390.0	480.0	580.0	700.0	760.0	830.0	900.0
90	(32.2)	240.0	270.0	310.0	380.0	470.0	580.0	700.0	760.0	830.0	900.0
100	(37.8)	230.0	260.0	300.0	380.0	470.0	570.0	690.0	760.0	830.0	900.0
110	(43.3)			290.0	370.0	460.0	560.0	680.0	750.0	820.0	890.0
115	(48.9)				360.0	450.0	560.0	680.0	740.0	810.0	880.0
130	(54.4)					430.0	540.0	660.0	720.0	790.0	860.0
140	(60.0)						530.0	640.0	710.0	780.0	850.0
150	(65.6)							630.0	690.0	760.0	830.0

Nominal Performance Values (±5%) based on minimum 72 hours run-in. Subject to change without notice.

bpp.cpc.copyright

Drawing

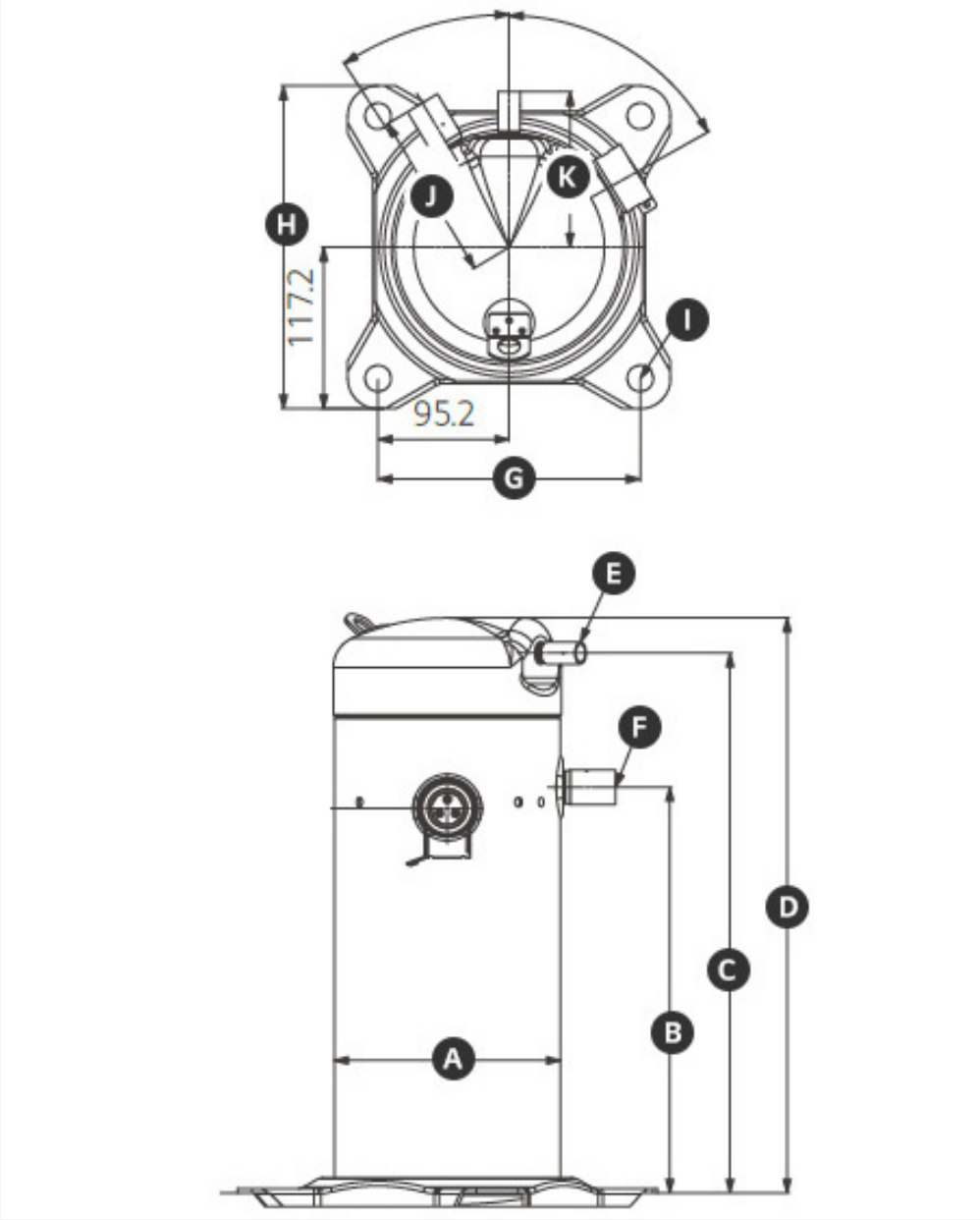

A(ø)	164.6
B(mm)	295
C(mm)	394
D(mm)	419
E(I.D ø)	12.7-12.9
F(I.D ø)	22.3-22.5
G(mm)	190.5
H(mm)	234.5
I(ø)	19

bpp.cpc.copyright

Operation Envelop

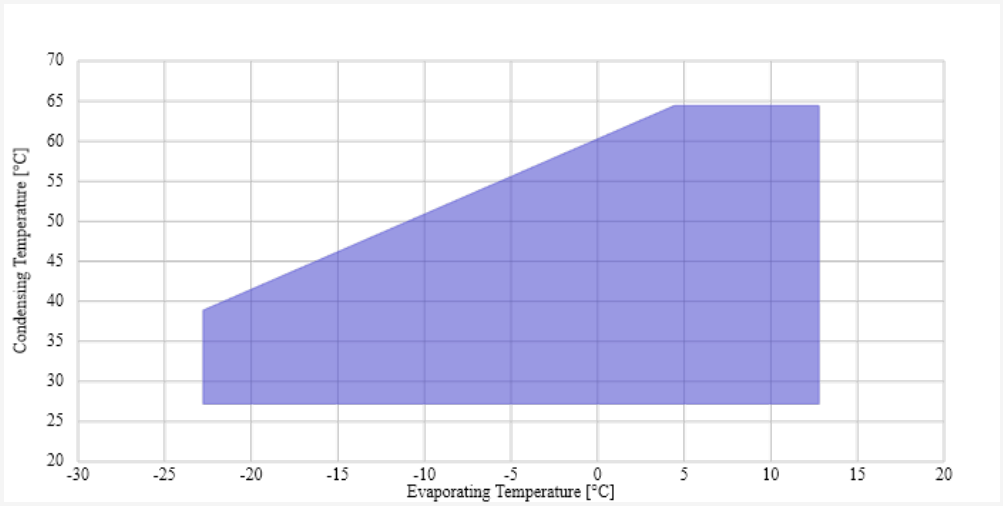

R410A

bpp.cpc.copyright