Specification

Compression Type	Scroll Compressor	Refrigerant	R410A
Speed	Fixed	Power Source	208-230V / 60Hz
Application1	Air conditioning - Unitary	Application2	
Application3		Application4	
Application5			

Performance

Capacity[BTU/HR]	42,000	Input [Watts]	3962
EER[BTU/W.HR]	10.60	Noise [dB]	75
Vibration [um]	50	RPM	

Mechanical

Displacement [cm3 / rev]	40	Weight [kg]	31.2 kg
Compressor Cooling			

Electrical

Starting Capacitor [MFD/VAC]		Running Current	
Protection Type	Internal OLP	Max Continuous Current [A]	28.5
Lock Rotor Ampere [A]	108	Running Capacitor [MFD/VAC]	70/370
Rated Revolution		Max Continuous Ampere	
Max Operation Current		OLP	
Capacitor		Motor Type	
Starting Torque			

Test Condition	ARI		
Evaporating Temperature[°C]		Condensing Temperature[°C]	
Subcooled Temperature[°C]		Superheated Temperature[°C]	
Ambient Temperaturee[°C]			°

Standard	UL		

bpp.cpc.copyright

Performance

RATING CONDITIONS

20 °F Superheat | 15 °F Sub Cooling
95 °F Ambient Air Over | 60 Hz Operation

RATED PERFORMANCE
SCROLL COMPRESSOR | **ABG042KA** | R410A

CAPACITY (BTU/HR)

Condensing Temperature		Evaporating Temperature °F (°C)									
		-10	-5	0	10	20	30	40	45	50	55
°F	(°C)	(-23)	(-20.5)	(-17.7)	(-12.2)	(-6.7)	(-1.1)	(4.4)	(7.2)	(10.0)	(12.8)
80	(26.7)	17,708	19,900	22,400	28,100	34,900	42,900	52,200	57,400	62,900	68,700
90	(32.2)	16,600	18,800	21,200	26,800	33,400	41,100	50,000	54,900	60,100	65,700
100	(37.8)	15,200	17,400	19,800	25,200	31,500	38,900	47,400	52,100	57,100	62,400
110	(43.3)			18,100	23,300	29,400	36,500	44,500	49,000	53,750	58,800
115	(48.9)				22,300	28,300	35,100	43,000	47,400	52,000	56,900
130	(54.4)					24,500	30,800	38,100	42,000	46,300	50,700
140	(60.0)						27,700	34,500	38,200	42,200	46,400
150	(65.6)							30,700	34,200	37,900	41,800

EER (BTU/WATT-HR)

Condensing Temperature		Evaporating Temperature °F (°C)									
		-10	-5	0	10	20	30	40	45	50	55
°F	(°C)	(-23)	(-20.5)	(-17.7)	(-12.2)	(-6.7)	(-1.1)	(4.4)	(7.2)	(10.0)	(12.8)
80	(26.7)	8.0	9.0	10.2	12.9	16.3	20.3	25.5	28.4	31.8	35.6
90	(32.2)	6.7	7.6	8.5	10.9	13.6	17.0	21.1	23.6	26.2	29.2
100	(37.8)	5.5	6.3	7.1	9.0	11.3	14.1	17.6	19.5	21.7	24.2
110	(43.3)			5.7	7.4	9.3	11.7	14.5	16.1	17.9	19.9
115	(48.9)				6.6	8.4	10.5	13.1	14.6	16.3	18.1
130	(54.4)					6.0	7.6	9.5	10.6	11.8	13.1
140	(60.0)						5.9	7.5	8.4	9.4	10.4
150	(65.6)							5.8	6.5	7.3	8.1

POWER (WATTS)

Condensing Temperature		Evaporating Temperature °F (°C)									
		-10	-5	0	10	20	30	40	45	50	55
°F	(°C)	(-23)	(-20.5)	(-17.7)	(-12.2)	(-6.7)	(-1.1)	(4.4)	(7.2)	(10.0)	(12.8)
80	(26.7)	2,210	2,200	2,190	2,170	2,140	2,110	2,050	2,020	1,980	1,930
90	(32.2)	2,480	2,480	2,480	2,470	2,450	2,420	2,370	2,330	2,290	2,250
100	(37.8)	2,780	2,780	2,790	2,790	2,780	2,750	2,700	2,670	2,630	2,580
110	(43.3)			3,150	3,150	3,150	3,120	3,070	3,040	2,996	2,950
115	(48.9)				3,360	3,360	3,330	3,280	3,240	3,200	3,150
130	(54.4)					4,090	4,070	4,010	3,970	3,920	3,860
140	(60.0)						4,670	4,610	4,560	4,510	4,450
150	(65.6)							5,320	5,270	5,210	5,140

CURRENT (AMPS) @ 230 VOLTS

Condensing Temperature		Evaporating Temperature °F (°C)									
		-10	-5	0	10	20	30	40	45	50	55
°F	(°C)	(-23)	(-20.5)	(-17.7)	(-12.2)	(-6.7)	(-1.1)	(4.4)	(7.2)	(10.0)	(12.8)
80	(26.7)	10.0	10.0	10.0	9.9	9.8	9.6	9.3	9.1	8.9	8.6
90	(32.2)	10.8	10.9	10.9	11.0	11.0	10.8	10.6	10.4	10.2	10.0
100	(37.8)	11.9	12.0	12.1	12.2	12.3	12.3	12.1	11.9	11.7	11.5
110	(43.3)			13.7	13.8	13.9	13.9	13.8	13.7	13.5	13.2
115	(48.9)				14.8	14.9	14.9	14.7	14.6	14.4	14.2
130	(54.4)					18.3	18.2	18.0	17.9	17.7	17.4
140	(60.0)						20.9	20.7	20.5	20.2	19.9
150	(65.6)							23.7	23.5	23.2	22.8

MASS FLOW (LBS/HR)

Condensing Temperature		Evaporating Temperature °F (°C)									
		-10	-5	0	10	20	30	40	45	50	55
°F	(°C)	(-23)	(-20.5)	(-17.7)	(-12.2)	(-6.7)	(-1.1)	(4.4)	(7.2)	(10.0)	(12.8)
80	(26.7)	213.0	240.0	270.0	330.0	400.0	490.0	590.0	650.0	700.0	770.0
90	(32.2)	210.0	240.0	260.0	330.0	400.0	490.0	590.0	640.0	700.0	770.0
100	(37.8)	200.0	230.0	260.0	320.0	400.0	490.0	590.0	640.0	700.0	760.0
110	(43.3)			250.0	320.0	390.0	480.0	580.0	640.0	690.0	760.0
115	(48.9)				310.0	390.0	480.0	580.0	630.0	690.0	750.0
130	(54.4)					370.0	460.0	560.0	620.0	670.0	730.0
140	(60.0)						440.0	540.0	600.0	660.0	720.0
150	(65.6)							520.0	580.0	640.0	700.0

Nominal Performance Values (±5%) based on minimum 72 hours run-in. Subject to change without notice.

bpp.cpc.copyright

Drawing

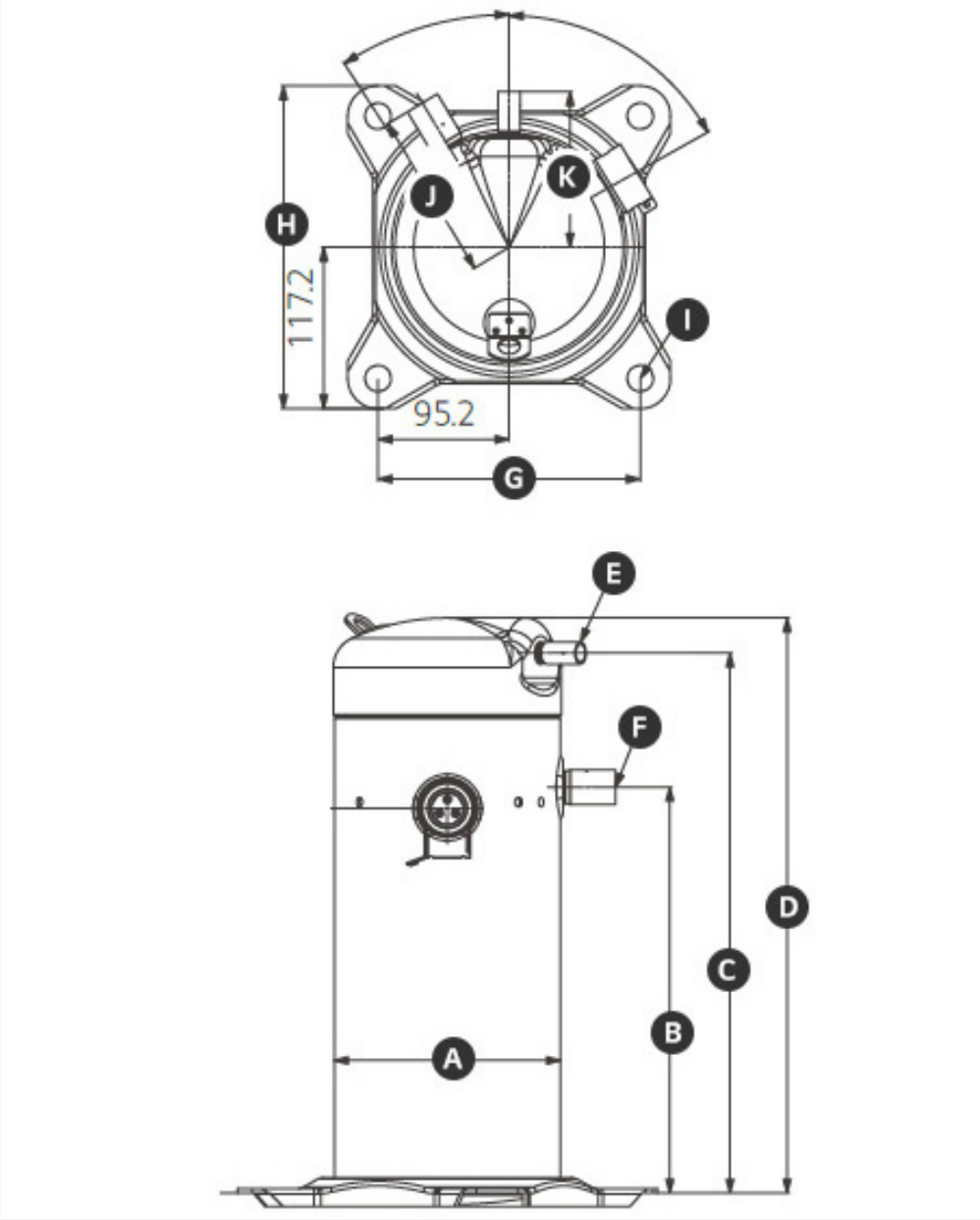

A(ø)	164.6
B(mm)	295
C(mm)	394
D(mm)	419
E(I.D ø)	12.7-12.9
F(I.D ø)	22.3-22.5
G(mm)	190.5
H(mm)	234.5
I(ø)	19

bpp.cpc.copyright

Operation Envelop

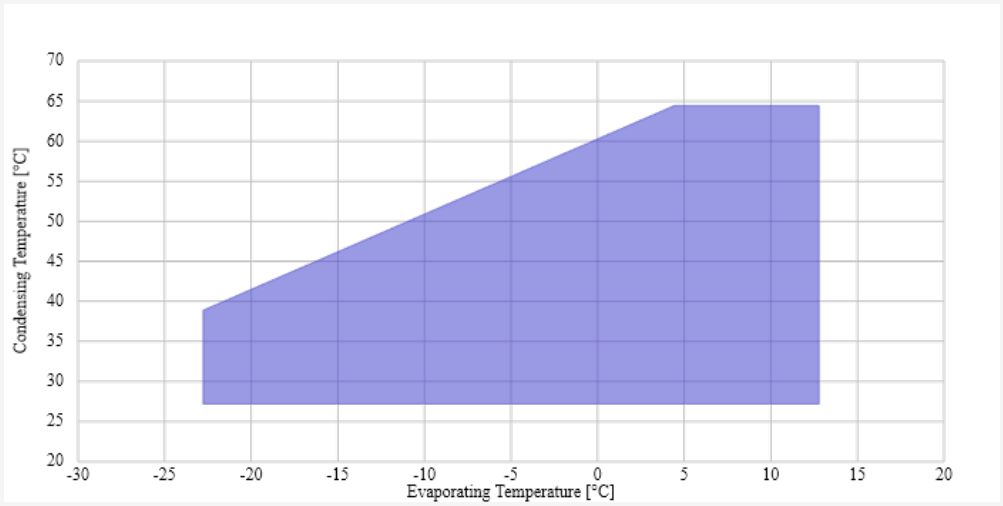

R410A

bpp.cpc.copyright