Specification

Compression Type	Scroll Compressor	Refrigerant	R410A
Speed	Fixed	Power Source	208-230V / 60Hz
Application1	Air conditioning - Unitary	Application2	
Application3		Application4	
Application5			

Performance

Capacity[BTU/HR]	37,500	Input [Watts]	3538
EER[BTU/W.HR]	10.60	Noise [dB]	75
Vibration [um]	50	RPM	

Mechanical

Displacement [cm3 / rev]	35.8	Weight [kg]	31.1 kg
Compressor Cooling			

Electrical

Starting Capacitor [MFD/VAC]		Running Current	
Protection Type	Internal OLP	Max Continuous Current [A]	24.4
Lock Rotor Ampere [A]	105.5	Running Capacitor [MFD/VAC]	70/370
Rated Revolution		Max Continuous Ampere	
Max Operation Current		OLP	
Capacitor		Motor Type	
Starting Torque			

Test Condition	ARI		
Evaporating Temperature[°C]		Condensing Temperature[°C]	
Subcooled Temperature[°C]		Superheated Temperature[°C]	
Ambient Temperaturee[°C]			°

Standard	UL		

bpp.cpc.copyright

Performance

RATING CONDITIONS

20 °F Superheat | 15 °F Sub Cooling
95 °F Ambient Air Over | 60 Hz Operation

RATED PERFORMANCE
SCROLL COMPRESSOR | **ABG038KA** | R410A

CAPACITY (BTU/HR)

Condensing Temperature		Evaporating Temperature °F (°C)									
		-10	-5	0	10	20	30	40	45	50	55
°F	(°C)	(-23)	(-20.5)	(-17.7)	(-12.2)	(-6.7)	(-1.1)	(4.4)	(7.2)	(10.0)	(12.8)
80	(26.7)	15,765	17,800	20,000	25,200	31,400	38,700	47,100	51,700	56,600	61,800
90	(32.2)	14,600	16,500	18,700	23,800	29,800	36,800	44,900	49,400	54,100	59,200
100	(37.8)	13,300	15,200	17,300	22,200	28,000	34,800	42,600	46,900	51,400	56,300
110	(43.3)			15,800	20,500	26,100	32,600	40,100	44,200	48,545	53,200
115	(48.9)				19,600	25,100	31,400	38,700	42,700	47,000	51,500
130	(54.4)					21,800	27,700	34,400	38,200	42,100	46,300
140	(60.0)						24,900	31,300	34,800	38,600	42,500
150	(65.6)							28,000	31,300	34,800	38,500

EER (BTU/WATT-HR)

Condensing Temperature		Evaporating Temperature °F (°C)									
		-10	-5	0	10	20	30	40	45	50	55
°F	(°C)	(-23)	(-20.5)	(-17.7)	(-12.2)	(-6.7)	(-1.1)	(4.4)	(7.2)	(10.0)	(12.8)
80	(26.7)	7.9	8.9	10.1	12.8	16.1	20.3	25.2	28.1	31.4	35.1
90	(32.2)	6.5	7.3	8.3	10.7	13.5	17.0	21.2	23.6	26.3	29.3
100	(37.8)	5.2	5.9	6.8	8.8	11.2	14.1	17.6	19.6	21.8	24.3
110	(43.3)			5.4	7.1	9.1	11.6	14.5	16.1	17.9	19.9
115	(48.9)				6.3	8.2	10.4	13.1	14.6	16.2	18.0
130	(54.4)					5.8	7.5	9.5	10.6	11.8	13.2
140	(60.0)						5.9	7.5	8.5	9.5	10.5
150	(65.6)							5.9	6.7	7.5	8.4

POWER (WATTS)

Condensing Temperature		Evaporating Temperature °F (°C)									
		-10	-5	0	10	20	30	40	45	50	55
°F	(°C)	(-23)	(-20.5)	(-17.7)	(-12.2)	(-6.7)	(-1.1)	(4.4)	(7.2)	(10.0)	(12.8)
80	(26.7)	2,000	1,990	1,990	1,970	1,950	1,910	1,870	1,840	1,800	1,760
90	(32.2)	2,260	2,250	2,240	2,230	2,200	2,170	2,120	2,090	2,060	2,020
100	(37.8)	2,580	2,570	2,550	2,530	2,500	2,470	2,420	2,390	2,360	2,320
110	(43.3)			2,920	2,890	2,860	2,820	2,770	2,740	2,707	2,670
115	(48.9)				3,090	3,060	3,010	2,960	2,930	2,900	2,860
130	(54.4)					3,750	3,690	3,630	3,590	3,560	3,520
140	(60.0)						4,220	4,150	4,110	4,070	4,030
150	(65.6)							4,740	4,700	4,650	4,600

CURRENT (AMPS) @ 230 VOLTS

Condensing Temperature		Evaporating Temperature °F (°C)									
		-10	-5	0	10	20	30	40	45	50	55
°F	(°C)	(-23)	(-20.5)	(-17.7)	(-12.2)	(-6.7)	(-1.1)	(4.4)	(7.2)	(10.0)	(12.8)
80	(26.7)	10.1	10.1	10.1	9.8	9.4	9.1	8.9	8.9	9.0	9.2
90	(32.2)	10.8	10.9	10.9	10.7	10.4	10.0	9.8	9.8	9.9	10.1
100	(37.8)	12.0	12.1	12.1	12.0	11.7	11.4	11.1	11.1	11.1	11.3
110	(43.3)			13.7	13.7	13.4	13.0	12.7	12.7	12.7	12.7
115	(48.9)				14.6	14.3	13.9	13.6	13.5	13.5	13.6
130	(54.4)					17.4	17.0	16.5	16.4	16.3	16.2
140	(60.0)						19.2	18.6	18.4	18.2	18.1
150	(65.6)							20.8	20.5	20.2	20.0

MASS FLOW (LBS/HR)

Condensing Temperature		Evaporating Temperature °F (°C)									
		-10	-5	0	10	20	30	40	45	50	55
°F	(°C)	(-23)	(-20.5)	(-17.7)	(-12.2)	(-6.7)	(-1.1)	(4.4)	(7.2)	(10.0)	(12.8)
80	(26.7)	190.0	210.0	240.0	290.0	360.0	440.0	530.0	580.0	630.0	690.0
90	(32.2)	180.0	210.0	230.0	290.0	360.0	440.0	530.0	580.0	630.0	690.0
100	(37.8)	180.0	200.0	230.0	290.0	360.0	440.0	530.0	580.0	630.0	690.0
110	(43.3)			220.0	280.0	350.0	430.0	520.0	570.0	630.0	680.0
115	(48.9)				270.0	350.0	430.0	520.0	570.0	620.0	680.0
130	(54.4)					330.0	410.0	510.0	560.0	610.0	670.0
140	(60.0)						400.0	490.0	550.0	600.0	660.0
150	(65.6)							480.0	530.0	580.0	640.0

Nominal Performance Values (±5%) based on minimum 72 hours run-in. Subject to change without notice.

bpp.cpc.copyright

Drawing

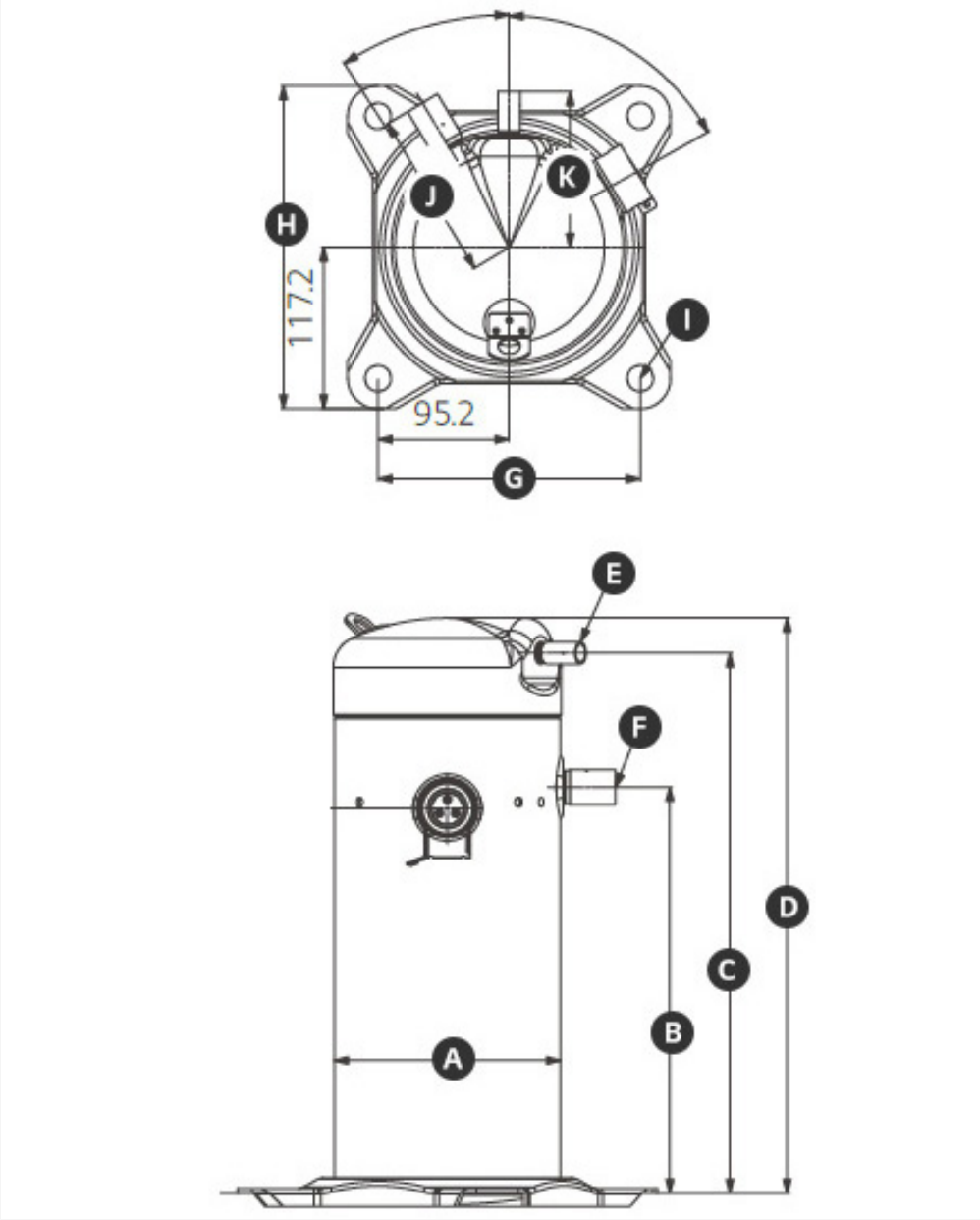

A(ø)	164.6
B(mm)	295
C(mm)	394
D(mm)	419
E(I.D ø)	12.7-12.9
F(I.D ø)	22.3-22.5
G(mm)	190.5
H(mm)	234.5
I(ø)	19

bpp.cpc.copyright

Operation Envelop

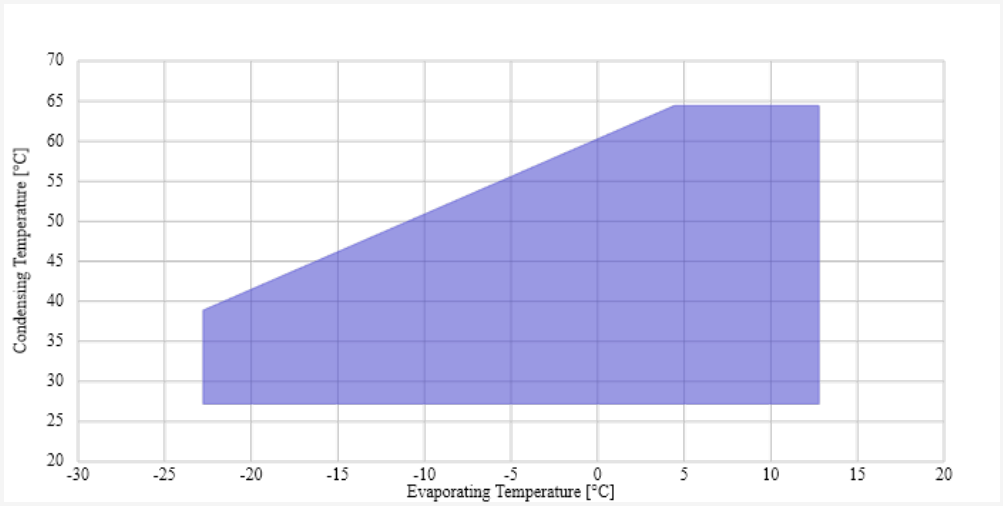

R410A

bpp.cpc.copyright