Specification

Compression Type	Scroll Compressor	Refrigerant	R410A
Speed	Fixed	Power Source	208-230V / 60Hz
Application1	Air conditioning - Unitary	Application2	
Application3		Application4	
Application5			

Performance

Capacity[BTU/HR]	36,000	Input [Watts]	3429
EER[BTU/W.HR]	10.50	Noise [dB]	74
Vibration [um]	50	RPM	

Mechanical

Displacement [cm3 / rev]	34.4	Weight [kg]	31.5 kg
Compressor Cooling			

Electrical

Starting Capacitor [MFD/VAC]		Running Current	
Protection Type	Internal OLP	Max Continuous Current [A]	24.8
Lock Rotor Ampere [A]	112.3	Running Capacitor [MFD/VAC]	45/440
Rated Revolution		Max Continuous Ampere	
Max Operation Current		OLP	
Capacitor		Motor Type	
Starting Torque			

Test Condition	ARI		
Evaporating Temperature[°C]		Condensing Temperature[°C]	
Subcooled Temperature[°C]		Superheated Temperature[°C]	
Ambient Temperaturee[°C]			°

Standard	UL		

bpp.cpc.copyright

Performance

RATING CONDITIONS

20 °F Superheat | 15 °F Sub Cooling
95 °F Ambient Air Over | 60 Hz Operation

RATED PERFORMANCE
SCROLL COMPRESSOR | **ABG036KA** | R410A

CAPACITY (BTU/HR)

Condensing Temperature		Evaporating Temperature °F (°C)									
		-10	-5	0	10	20	30	40	45	50	55
°F	(°C)	(-23)	(-20.5)	(-17.7)	(-12.2)	(-6.7)	(-1.1)	(4.4)	(7.2)	(10.0)	(12.8)
80	(26.7)	15,066	17,000	19,100	24,100	30,000	37,000	44,900	49,400	54,000	59,000
90	(32.2)	14,100	16,000	18,100	23,000	28,800	35,500	43,200	47,500	52,000	56,800
100	(37.8)	12,700	14,600	16,700	21,400	27,000	33,500	40,900	45,000	49,300	53,900
110	(43.3)			15,000	19,600	25,000	31,200	38,300	42,200	46,327	50,700
115	(48.9)				18,700	23,900	30,000	36,900	40,700	44,700	49,000
130	(54.4)					20,600	26,200	32,600	36,000	39,700	43,600
140	(60.0)						23,800	29,700	33,000	36,400	40,100
150	(65.6)							27,200	30,200	33,300	36,700

EER (BTU/WATT-HR)

Condensing Temperature		Evaporating Temperature °F (°C)									
		-10	-5	0	10	20	30	40	45	50	55
°F	(°C)	(-23)	(-20.5)	(-17.7)	(-12.2)	(-6.7)	(-1.1)	(4.4)	(7.2)	(10.0)	(12.8)
80	(26.7)	8.0	9.0	10.1	12.8	16.2	20.3	25.1	27.8	30.7	33.7
90	(32.2)	6.4	7.3	8.3	10.7	13.6	17.0	21.1	23.3	25.7	28.3
100	(37.8)	5.1	5.9	6.7	8.8	11.2	14.1	17.6	19.4	21.4	23.5
110	(43.3)			5.3	7.1	9.2	11.6	14.5	16.0	17.7	19.5
115	(48.9)				6.3	8.2	10.5	13.1	14.5	16.0	17.7
130	(54.4)					5.8	7.5	9.5	10.5	11.7	12.9
140	(60.0)						5.9	7.5	8.4	9.3	10.3
150	(65.6)							5.9	6.6	7.4	8.1

POWER (WATTS)

Condensing Temperature		Evaporating Temperature °F (°C)									
		-10	-5	0	10	20	30	40	45	50	55
°F	(°C)	(-23)	(-20.5)	(-17.7)	(-12.2)	(-6.7)	(-1.1)	(4.4)	(7.2)	(10.0)	(12.8)
80	(26.7)	1,890	1,890	1,890	1,880	1,850	1,820	1,790	1,780	1,760	1,750
90	(32.2)	2,190	2,180	2,170	2,150	2,120	2,090	2,050	2,040	2,020	2,010
100	(37.8)	2,500	2,490	2,480	2,440	2,410	2,370	2,330	2,320	2,300	2,290
110	(43.3)			2,820	2,770	2,730	2,690	2,650	2,630	2,614	2,600
115	(48.9)				2,960	2,910	2,860	2,820	2,800	2,790	2,770
130	(54.4)					3,550	3,490	3,440	3,420	3,400	3,390
140	(60.0)						4,020	3,960	3,930	3,910	3,900
150	(65.6)							4,580	4,550	4,530	4,510

CURRENT (AMPS) @ 230 VOLTS

Condensing Temperature		Evaporating Temperature °F (°C)									
		-10	-5	0	10	20	30	40	45	50	55
°F	(°C)	(-23)	(-20.5)	(-17.7)	(-12.2)	(-6.7)	(-1.1)	(4.4)	(7.2)	(10.0)	(12.8)
80	(26.7)	9.0	9.0	9.0	9.0	9.0	9.0	9.1	9.1	9.1	9.1
90	(32.2)	10.4	10.3	10.2	10.0	9.9	9.9	9.8	9.8	9.8	9.8
100	(37.8)	12.0	11.8	11.6	11.3	11.1	11.0	10.8	10.8	10.8	10.7
110	(43.3)			13.3	12.9	12.6	12.3	12.2	12.1	12.1	12.1
115	(48.9)				13.7	13.4	13.1	12.9	12.9	12.8	12.8
130	(54.4)					16.2	15.9	15.7	15.6	15.6	15.6
140	(60.0)						18.0	17.8	17.8	17.8	17.8
150	(65.6)							20.3	20.2	20.3	20.3

MASS FLOW (LBS/HR)

Condensing Temperature		Evaporating Temperature °F (°C)									
		-10	-5	0	10	20	30	40	45	50	55
°F	(°C)	(-23)	(-20.5)	(-17.7)	(-12.2)	(-6.7)	(-1.1)	(4.4)	(7.2)	(10.0)	(12.8)
80	(26.7)	181.0	200.0	230.0	280.0	350.0	420.0	510.0	550.0	610.0	660.0
90	(32.2)	180.0	200.0	230.0	280.0	350.0	420.0	510.0	560.0	610.0	660.0
100	(37.8)	170.0	190.0	220.0	280.0	340.0	420.0	510.0	560.0	610.0	660.0
110	(43.3)			210.0	270.0	330.0	410.0	500.0	550.0	600.0	650.0
115	(48.9)				260.0	330.0	410.0	500.0	540.0	590.0	650.0
130	(54.4)					310.0	390.0	480.0	530.0	580.0	630.0
140	(60.0)						380.0	470.0	520.0	570.0	620.0
150	(65.6)							460.0	510.0	560.0	610.0

Nominal Performance Values (±5%) based on minimum 72 hours run-in. Subject to change without notice.

bpp.cpc.copyright

Drawing

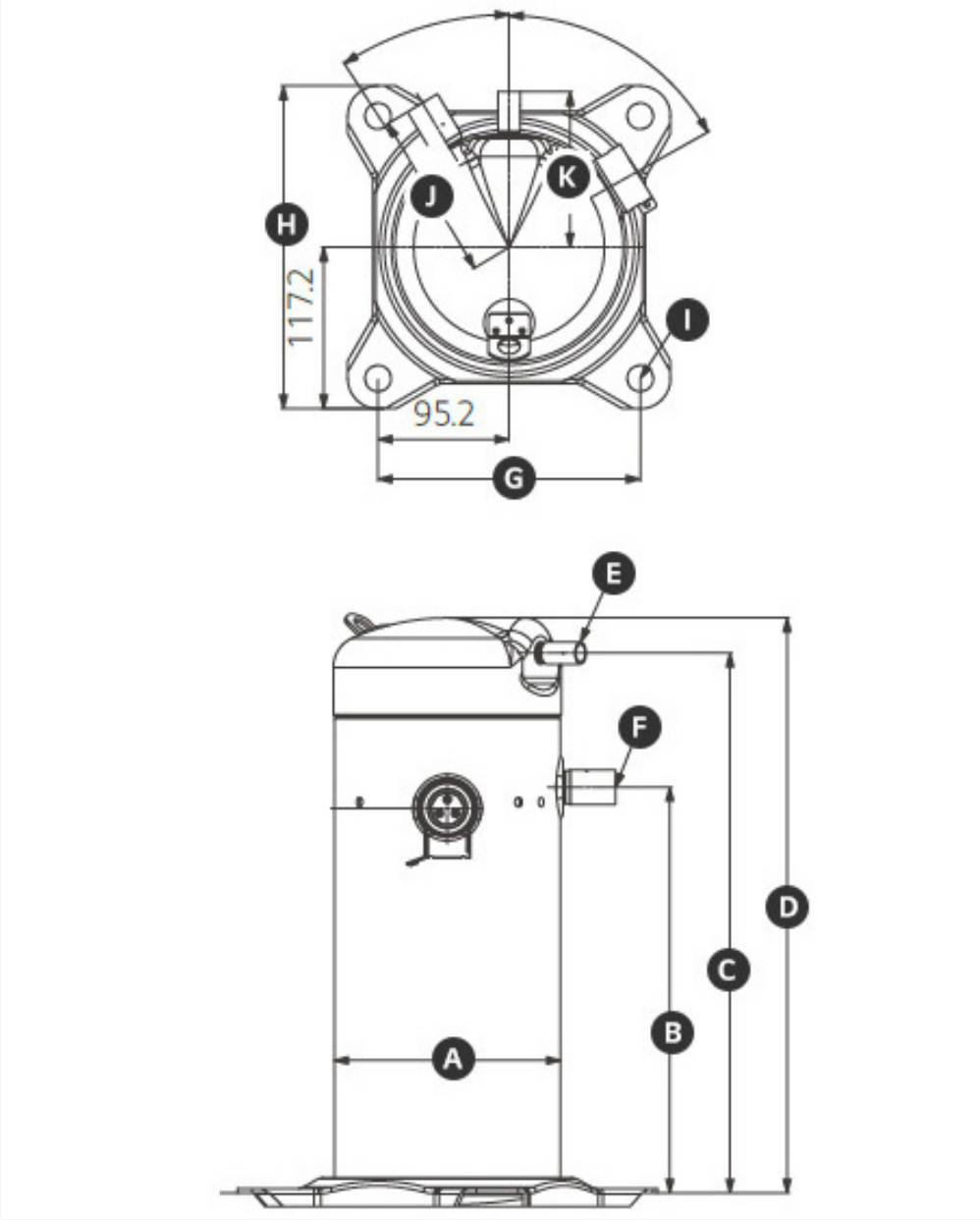

A(ø)	164.6
B(mm)	295
C(mm)	394
D(mm)	419
E(I.D ø)	12.7-12.9
F(I.D ø)	22.3-22.5
G(mm)	190.5
H(mm)	234.5
I(ø)	19

bpp.cpc.copyright

Operation Envelop

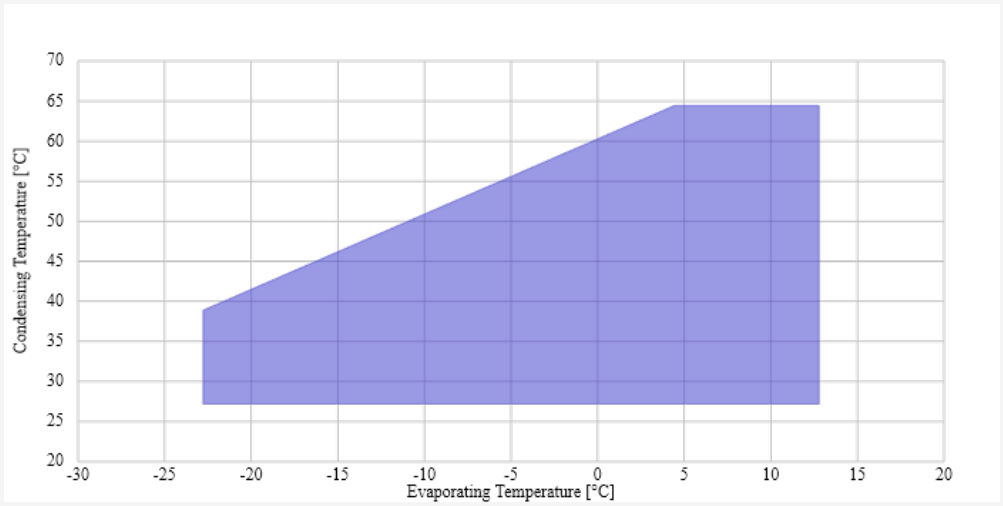

R410A

bpp.cpc.copyright