White-Rodgers

50A56-956

Integrated Furnace Control

INSTALLATION INSTRUCTIONS

FAILURE TO READ AND FOLLOW ALL INSTRUCTIONS CAREFULLY BEFORE INSTALLING OR OPERATING THIS CONTROL COULD CAUSE PERSONAL INJURY AND/OR PROPERTY DAMAGE.

DESCRIPTION

The 50A56-956 is an automatic gas interrupted ignition control that employs a microprocessor to continually monitor, analyze, and control the proper operation of the gas burner, inducer, and fan.

Signals interpreted during continual surveillance of the thermostat and flame sensing element initiate automatic ignition of the burner, sensing of the flame, and system shut-off during normal operation.

These controls incorporate system fault analysis for quick gas flow shut-off, coupled with automatic ignition retry upon sensing a fault correction.

Kit includes: 1) Ignition Control 2) Metal Control Box
3) Install Sheet

50A56-956 Cross Reference Information

York		White-Rodgers
S1-33102956000	S1-03101266000	50A56-242
S1-03109167000	S1-03101284000	50A56-243
S1-03101933000	S1-03101973000	
S1-03101267000	S1-03101972000	
S1-03101267001	265901	
S1-03100662000	265902	
S1-03101250000	539617	
S1-33103010000		

PRECAUTIONS

Installation should be done by a qualified heating and air conditioning contractor or licensed electrician.

If in doubt about whether your wiring is millivolt, line, or low voltage, have it inspected by a qualified heating and air conditioning contractor or licensed electrician.

Do not exceed the specification ratings.

All wiring must conform to local and national electrical codes and ordinances.

This control is a precision instrument, and should be handled carefully. Rough handling or distorting components could cause the control to malfunction.

Following installation or replacement, follow manufacturer's recommended installation/service instructions to ensure proper operation.

⚠ CAUTION

Do not short out terminals on gas valve or primary control. Short or incorrect wiring may damage the thermostat.

⚠ WARNING

Failure to comply with the following warnings could result in personal injury or property damage.

FIRE HAZARD

- **Do not exceed the specified voltage.**
- **Replace existing control with exact model and dash number.**
- **Protect the control from direct contact with water (dripping, spraying, rain, etc.).**
- **If the control has been in direct contact with water, replace the control.**
- **Label all wires before disconnection when servicing controls. Wiring errors can cause improper and dangerous operation.**
- **Route and secure wiring away from flame.**

SHOCK HAZARD

- **Disconnect electric power before servicing.**
- **Ensure proper earth grounding of appliance.**
- **Ensure proper connection of line neutral and line hot wires.**

EXPLOSION HAZARD

- **Shut off main gas to appliance until installation is complete.**

CONTENTS

Description 1
Precautions 1
Specifications 2
Installation 3
Mounting & Wiring
Operation 6
Troubleshooting 8

SPECIFICATIONS

ELECTRICAL RATINGS [@ 77°F (25°C)]:

Input Voltage: 25 VAC 50/60 Hz

Max. Input Current @ 25 VAC: 0.45 amp
Relay Load Ratings:
Valve Relay: 1.5 amp @ 25 VAC 50/60 Hz 0.6 pf
Ignitor Relay: 6.0 amp @ 120 VAC 50/60 Hz (resistive)
Inducer Relay: 2.2 FLA–3.5 LRA @ 120 VAC
Circulator Relay: 14.5 FLA–25.0 LRA @ 120 VAC

Flame Current Requirements:
Minimum current to insure flame detection: 1 µa DC*
Maximum current for non-detection: 0.1 µa DC*
Maximum allowable leakage resistance: 100 M ohms

*Measured with a DC microammeter in the flame probe lead

OPERATING TEMPERATURE RANGE:
-40° to 176°F (-40° to 80°C)

HUMIDITY RANGE:
5% to 93% relative humidity (non-condensing)

MOUNTING:
Surface mount multipoise

Timing Specs: (@ 60 Hz**)

	maximum
Flame Establishing Time:	0.8 sec
Flame Failure Response Time:	2.0 sec

Gases Approved: Natural, Manufactured, Mixed, Liquified Petroleum, and LP Gas Air Mixtures are all approved for use.

**At 50% Hz, all timing specifications should be increased by 20%

TIMING SPECIFICATIONS
(All times are in seconds, unless noted otherwise)

Event	Definition	50A56-956
Pre-Purge	The period of time intended to allow for the dissipation of any unburned gas or residual products of combustion at the beginning of a furnace operating cycle prior to initiating ignition	0
Trial for Ignition Period (TFI)	The period of time between initiation of gas flow and the action to shut off the gas flow in the event of failure to establish proof of the supervised ignition source or the supervised main burner flame.	7
Ignition Activation Period (IAP)	The period of time between energizing the main gas valve and deactivation of the ignition means prior to the end of TFI	5
Retries	The additional attempts within the same thermostat cycle for ignition when the supervised main burner flame is not proven within the first trial for ignition period.	2 times
Recycles	The additional attempts within the same thermostat cycle for ignition after loss of the supervised ignition source or the supervised main burner flame.	4
Valve Sequence Period	Valve sequence period equals 7 seconds trial for ignition period x (1 initial try + 2 retries) + 12 seconds.	21
Interpurge	The period of time intended to allow for the dissipation of any unburned gas or residual products of combustion between the failed trial for ignition and the retry period.	15
Post-Purge	The period of time intended to allow for the dissipation of any unburned gas or residual products of combustion at the end of a furnace burner operating cycle. Post-purge begins at the loss of flame sense.	15
Lockout Time	ANSI standard rated module timing.	140
Heat Delay-To-Fan-On	The period of time between proof of the supervised main burner flame and the activation of the blower motor at Heat speed.	30
Heat Delay-To-Fan-Off*	The period of time between the loss of a call for heat and the deactivation of the blower motor at Heat speed.	60/90/120*/180
Cool Delay-To-Fan-On	The period of time after a thermostat demand for cool before energizing the circulator blower motor at Cool speed.	0
Cool Delay-To-Fan-Off*	The period of time between the loss of a call for cool and the deactivation of the blower motor at Cool speed.	**60**
Initial Ignitor Warm-up	The length of time allowed for the igniter to heat up prior to the initiation of gas flow.	17
Ignitor Warm-up Retries	In the event of a retry, the warm-up time will be increased by one second, up to a maximum of 27 seconds, and locked at that duration	27
Auto Reset	After one (1) hour of internal or external lockout, the control will automatically reset itself and go into an auto restart purge for 60 seconds.	60 minutes
Electronic Air Cleaner		Yes
Humidifier		Yes

*This time will vary depending on option switch position. The control is factory set at 120 seconds HEAT delay-to-fan-off. See OPERATION section for further information

⚠ WARNING

Failure to comply with the following warnings could result in personal injury or property damage.

FIRE HAZARD

- **Do not exceed the specified voltage.**
- **Replace existing control with exact model and dash number.**
- **Protect the control from direct contact with water (dripping, spraying, rain, etc.).**
- **If the control has been in direct contact with water, replace the control.**
- **Label all wires before disconnection when servicing controls. Wiring errors can cause improper and dangerous operation.**
- **Route and secure wiring away from flame.**

SHOCK HAZARD

- **Disconnect electric power before servicing.**
- **Ensure proper earth grounding of appliance.**
- **Ensure proper connection of line neutral and line hot wires.**

EXPLOSION HAZARD

- **Shut off main gas to appliance until installation is complete.**

⚠ CAUTION

Do not short out terminals on gas valve or primary control. Short or incorrect wiring may damage the thermostat.

MOUNTING AND WIRING

Certain upflow 90% models may require the installation of the provided metal control mounting box. The reuse of the existing door switch and transformer are required. Other models may require new mounting holes. In this case, use the mounting template located in figure 1. Specifically the BGU model furnaces may required not only new mounting holes, but also relocation of the existing transformer. In all cases the wiring connections will remain the same.

All wiring should be installed according to local and national electrical codes and ordinances.

The control must be secured to an area that will experience a minimum of vibration and remain below the maximum ambient temperature rating of 175°F. The control is approved for minimum ambient temperatures of -40°F.

Any orientation is acceptable.

Refer to the wiring diagram, page 4 and wiring table, page 5 when connecting the 50A56 control to other components of the system.

UL approved, 105°C rated 18 gauge, stranded, 2/64" thick insulation wire is recommended for all low voltage safety circuit connections.

UL approved 105°C rated 16 gauge min., stranded, 4/64" thick insulation wire is recommended for all line voltage connections.

After installation or replacement, follow appliance manufacturer's recommended installation or service instructions to ensure proper operation.

TYPICAL SYSTEM WIRING DIAGRAM

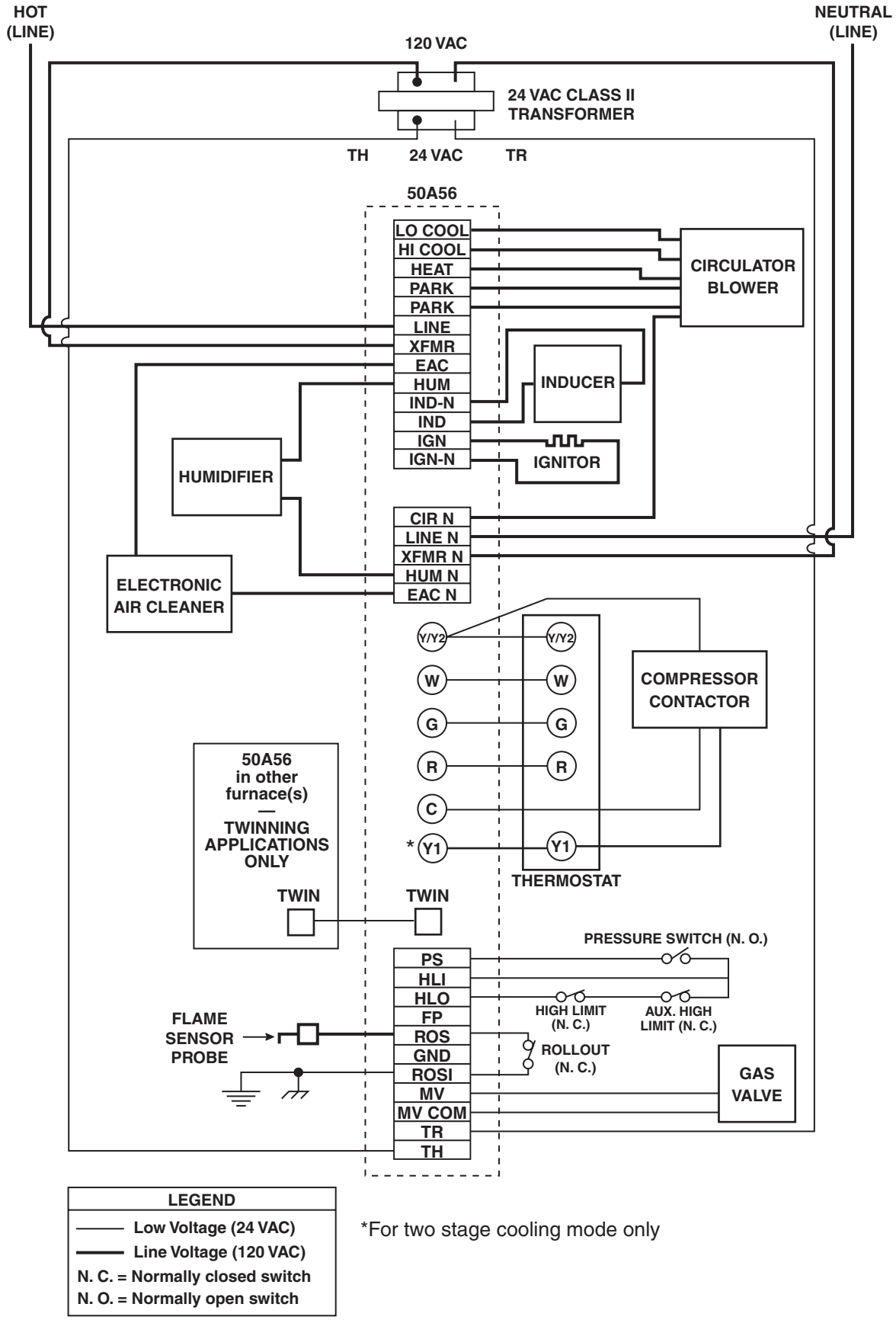

LEGEND
Low Voltage (24 VAC)
Line Voltage (120 VAC)
N. C. = Normally closed switch
N. O. = Normally open switch

*For two stage cooling mode only

TYPICAL SYSTEM WIRING TABLE

50A56 TERMINAL	TERMINAL TYPE	SYSTEM COMPONENT CONNECTION
W	Terminal block with captive screws	low voltage thermostat W terminal (or equivalent)
G		low voltage thermostat G terminal (or equivalent)
R		low voltage thermostat R terminal (or equivalent)
Y/Y2		low voltage thermostat Y terminal (or equivalent) (2nd wire from Y terminal goes to 24 VAC HOT side of compressor contactor coil)
Y1		low voltage thermostat Y1 terminal (or equivalent)
C		24 VAC COMMON side of compressor contactor coil
HLO (Pin 1)	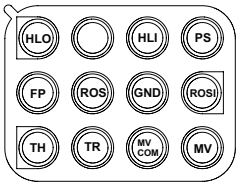	high limit OUTPUT
FP (Pin 2)		flame sensor probe†
TH (Pin 3)		24 VAC transformer (low voltage HIGH side)
Not Used (Pin 4)		
ROS (Pin 5)		rollout switch OUTPUT
TR (Pin 6)		24 VAC transformer (low voltage COMMON side)
HLI (Pin 7)		high limit INPUT
GND (Pin 8)		MUST BE RELIABLY GROUNDED TO CHASSIS
MV COM (Pin 9)		Main Valve Common
PS (Pin 10)		pressure switch INPUT
ROSI (Pin 11)		rollout switch INPUT
MV (Pin 12)		gas valve
IND (Pin 1)	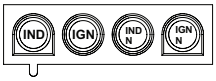	inducer HOT side
IGN (Pin 2)		ignitor HOT side
IND-N (Pin 3)		inducer NEUTRAL side
IGN-N (Pin 4)		ignitor NEUTRAL side
LO COOL	1/4" spade terminal	circulator blower LO COOL SPEED terminal
HI COOL	1/4" spade terminal	circulator blower HI COOL SPEED terminal
HEAT	1/4" spade terminal	circulator blower HEAT SPEED terminal
PARK (2 terminals)	1/4" spade terminal	unused circulator blower terminal
LINE	1/4" spade terminal	input voltage (120 VAC) HOT side
XFMR	1/4" spade terminal	24 VAC transformer line voltage HOT side
EAC (optional)	1/4" spade terminal	electronic air cleaner HOT side
HUM (optional)	1/4" spade terminal	humidifier HOT side
CIR N	1/4" spade terminal	circulator blower NEUTRAL terminal
LINE N	1/4" spade terminal	input voltage (120 VAC) NEUTRAL side
XFMR N	1/4" spade terminal	24 VAC transformer line voltage NEUTRAL side
EAC N (optional)	1/4" spade terminal	electronic air cleaner NEUTRAL side
HUM N (optional)	1/4" spade terminal	humidifier NEUTRAL side
TWIN	1/4" spade terminal	one wire twinning terminal

† Maximum recommended flame probe wire length is 36 inches.

OPERATION

OPTION SWITCHES

The shunt jumper (E34) on the 50A56 control are used to determine the length of the heat delay-to-fan-off periods. The following table shows the time periods that will result from the various positions.

Heat Delay-to-Fan-Off
Shunt Jumper E34

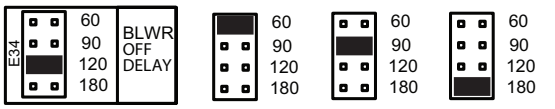

Factory Setting
120 Seconds

60 Seconds

90 Seconds

180 Seconds

HEAT MODE

In a typical system, a call for heat is initiated by closing the Thermostat W contacts. This starts the control's heating sequence. The inducer blower and optional humidifier are energized. After the pressure switch is proven the ignitor is energized and the warm-up time begins.

The ignitor is allowed to warm up for a 17 seconds initial warm-up.

The 120VAC ignitors with a 17-second warm-up time must be used. These ignitors are specially designed to heat up quickly at a low voltage condition without overheating at a high voltage condition. At the end of the ignitor warm-up time, both valves in the manifold gas valve are opened. Flame must be detected within 7 seconds.

When flame is detected, the delay-to-fan-on period begins. After the 30 seconds delay-to-fan-on period ends, the optional electronic air cleaner is energized and the circulator fan is energized at heat speed. When the thermostat is satisfied, the gas valve is de-energized. After proof of flame loss, the selectable heat delay-to-fan-off period begins and the inducer blower remains energized to purge the system for 15 seconds.

When the purge is complete, the inducer blower and humidifier are de-energized. After the delay-to-fan-off period ends, the circulator fan and electronic air cleaner are de-energized. If flame is not detected, both valves are de-energized, the ignitor is turned off, and the control goes into the "retry" sequence. The "retry" sequence provides a 15- second purge period following an unsuccessful ignition attempt (flame not detected). After this wait, the ignition sequence is restarted with a 27 second ignitor warm-up time. The control will allow 2 retry periods before entering system lockout.

If flame is established for more than 10 seconds after ignition, the controller will clear the ignition attempt (or retry) counter. If flame is lost after 10 seconds, it will restart the ignition sequence.

During burner operation, a momentary loss of power of 50 milliseconds or longer will de-energize the main gas valve. When power is restored, the gas valve will remain de-energized and a restart of the ignition sequence will begin immediately.

A momentary loss of gas supply, flame blowout, or a shorted or open condition in the flame probe circuit will be sensed within 2.0 seconds. The gas valve will de-energize and the control will restart the ignition sequence.

Recycles will begin and the burner will operate normally if the gas supply returns, or the fault condition is corrected.

If the control has gone into system lockout, it may be possible to reset the control by a momentary power interruption of one second or longer. Refer to **SYSTEM LOCKOUT FEATURES.**

SINGLE STAGE COOL MODE

In a typical single stage cooling system, a call for cool is initiated by closing the thermostat contacts, Y/Y2. This energizes the control and the compressor. The cool delay-to-fan-on period begins. After the delay period ends, the optional electronic air cleaner is energized, and the circulator fan is energized at high cool speed. After the thermostat is satisfied, the compressor is de-energized and the cool mode delay-to-fan-off period begins. After the delay-to-fan-off period ends, the circulator fan and electronic air cleaner (optional) are de-energized.

TWO STAGE COOLING MODE

In a typical two stage cooling system, a call for cool is initiated by closing the Y1 thermostat contacts. This energizes the control and first stage of the compressor. The cool delay-to-fan-on period begins.

After the delay period ends, the optional electronic air cleaner is energized, and the low cooling circulator fan is energized. When second stage cooling is called for the thermostat will energize Y/Y2. This will energize the second stage of the compressor and high cooling speed of the indoor circulating fan. After the thermostat is satisfied, the compressor is de-energized and the cool mode delay-to-fan-off period begins. After the delay-to-fan-off period ends, the circulator fan and electronic air cleaner (optional) are de-energized.

MANUAL FAN ON MODE

If the thermostat fan switch is moved to the ON position, the optional electronic air cleaner and circulator fan are energized. The circulator speed is selectable via shunt jumper option E33. Three choices that can be made are Lo Cool, Heat or Hi Cool. By moving the shunt jumper location, the desired continuous fan speed will be attained. When the fan switch is returned to the AUTO position, the circulator fan and electronic air cleaner (optional) are de-energized.

Manual Fan Speed
Shunt Jumper E33

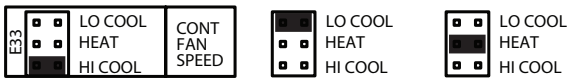

Factory Setting
HI COOL

LO COOL

HEAT

TWINNING INTERFACE

The control is equipped with a single wire twinning interface which is a 3/16" spade terminal designated as "TWIN". If twinning is used, either control will process a call for heat, cool or fan as described above. However, after the heat-, cool-, or fan-on delay time expires, both units will energize the circulator blowers at the same time. Likewise, after the heat-, cool-, or fan-off delay time expires, both units will de-energize the circulator blowers at the same time. This allows for proper air flow to be obtained. To assure proper control operation, both controls must share a common transformer ground (TR).

To enable twinning, do the following.

1. Power supplied to both furnaces must be from the same phase of the 24 VAC power to the control.
2. Connect the **TWIN** terminals on the controls of the furnaces to be twinned to each other using a single wire (14-22 AWG.).
3. Both controls must be of the same model and type for the twinning feature to work properly.

SYSTEM LOCKOUT

SYSTEM LOCKOUT FEATURES

When system lockout occurs, the gas valve is de-energized, the circulator blower is energized at heat speed, and, if flame is sensed, the inducer blower is energized. The diagnostic indicator light will flash or glow continuously to indicate system status. **(System lockout will never override the precautionary features.)**

To reset the control after system lockout, do one of the following:

1. Interrupt the call for heat or cool at the thermostat for at least one second but less than 20 seconds (if flame is sensed with the gas valve de-energized, interrupting the call for heat at the thermostat will **not** reset the control).
2. Interrupt the 24 VAC power at the control for at least one second. You may also need to reset the flame rollout sensor switch.
3. After one hour in lockout, the control will automatically reset itself.

DIAGNOSTIC FEATURES

The 50A56-956 control continuously monitors its own operation and the operation of the system. If a failure occurs, the LED will indicate a failure code as shown in the **TROUBLESHOOTING**. **If the failure is internal to the control, the LED will stay on solid. In this case, the entire control should be replaced, as the control is not field-repairable.**

Failure codes will flash the LED in the following flash-pause sequences to indicate failure status (each flash will last approximately 0.25 seconds, and each pause will last approximately 2 seconds).

FAULT RECALL

The last five fault codes stored can be displayed on the diagnostic LED. When the control is in standby mode (no call for heat or cool), press the FAULT RECALL switch for approximately two to five seconds and release. The fault codes will display beginning with the most recent fault first with a one second pause between codes. After the stored fault codes have all displayed, the LED will return to normal status. While displaying the stored fault codes, the control will ignore any new call for heat, cool or fan. If no fault codes are in memory, the LED will flash two green flashes then return to normal status.

FAULT CODE RESET

The stored fault codes can be erased from memory. When the control is in standby mode (no call for heat or cool), press the FAULT RECALL switch for five to ten seconds or until the diagnostic LED begins to rapid flash. When the switch is released, the LED will flash three green flashes when memory has been cleared.

The 50A56-956 has only one serviceable part –an automotive type fuse, which protects the low voltage transformer from damage if the output is short-circuited. If the fuse has opened up, remove whatever caused the short circuit and replace the fuse with only a 3 Amp automotive type fuse. If the fuse does not correct the condition, replace the entire control. There are no other user serviceable parts.

TROUBLESHOOTING

Green LED Flash	Amber LED Flash	Red LED Flash	Error/Condition	Comments/Troubleshooting
Slow			Normal operation	No fault
		1	Flame sensed when no flame should be present	Verify the gas valve is operating and shutting down properly. Flame in burner assembly should extinguish promptly at the end of the cycle. Check orifices and gas pressure.
		2	Pressure switch stuck closed/inducer error	Pressure switch stuck closed. Check switch function, verify inducer is turning off. Refer to wiring diagram, terminals PSI / HLO.
		3	Pressure switch stuck open/inducer error	Check pressure switch function and tubing. Verify inducer is turning on and pulling sufficient vacuum to engage switch. Refer to wiring diagram terminals, PS / HLI.
		4	Open limit switch	Verify continuity through limit switch circuit. Refer to wiring diagram terminals, HLI / HLO.
		5	Open rollout switch/open fuse detect	Verify continuity through rollout switch circuit. Refer to wiring diagram terminals, ROSI / ROS.
		6	Pressure switch cycle lockout	Check pressure switch function and tubing. Verify inducer is pulling sufficient vacuum to continuously engage switch. Refer to wiring diagram, terminals PS / HLO.
		7	External lockout (retries)	Failure to sense flame is often caused by carbon deposits on the flame sensor, a disconnected or shorted flame sensor lead or a poorly grounded furnace. Carbon deposits can be cleaned with emery cloth. Verify sensor is not contacting the burner and is located in a good position to sense flame. Ignitor must be positioned to light the gas immediately when the valve opens. If the ignitor has been replaced, verify hot spot position has not changed. Check sensor lead for shorting and verify furnace is grounded properly. Verify gas supply to valve, gas valve in "On" position and appliance lighting properly. Verify flame reaches flame sensor during ignition attempts and gas pressures are correct.
		8	External lockout (recycles)	See above
		9	Grounding or reversed polarity	Verify the control and furnace are properly grounded. Check and reverse polarity (primary or secondary) if incorrect.
		10	Gas flow with no call for heat	Verify the gas valve is operating and shutting down properly. Check gas valve wiring.
		11	Limit switch open – blower failure	Verify continuity through limit switch circuit. Refer to wiring diagram terminals, HLI / HLO.
		12	Ignitor failure	Open ignitor circuit indicated. Check wiring or possibly a broken ignitor.
		Solid	Internal GV error, micro, and frequency check	Control failure. Replace control.
		Rapid	Twinning error, incorrect 24V phasing	Check that the 24V is phased correctly.
	4		Y present with no G call	Check wiring from thermostat. The control is not receiving a "G" call with a "Y" signal.
	Slow		Normal operation with call for heat	No fault
	Rapid		Low flame sense current	Low flame sense current is often caused by carbon deposits on the flame sensor, a poorly grounded furnace or a mis-aligned flame sense probe. Carbon deposits can be cleaned with emery cloth. Check or improve furnace and module ground. Verify sensor is located in or very near flame as specified by the appliance manufacturer. Refer to wiring diagram FS terminal and GND.

NOTES

NOTES

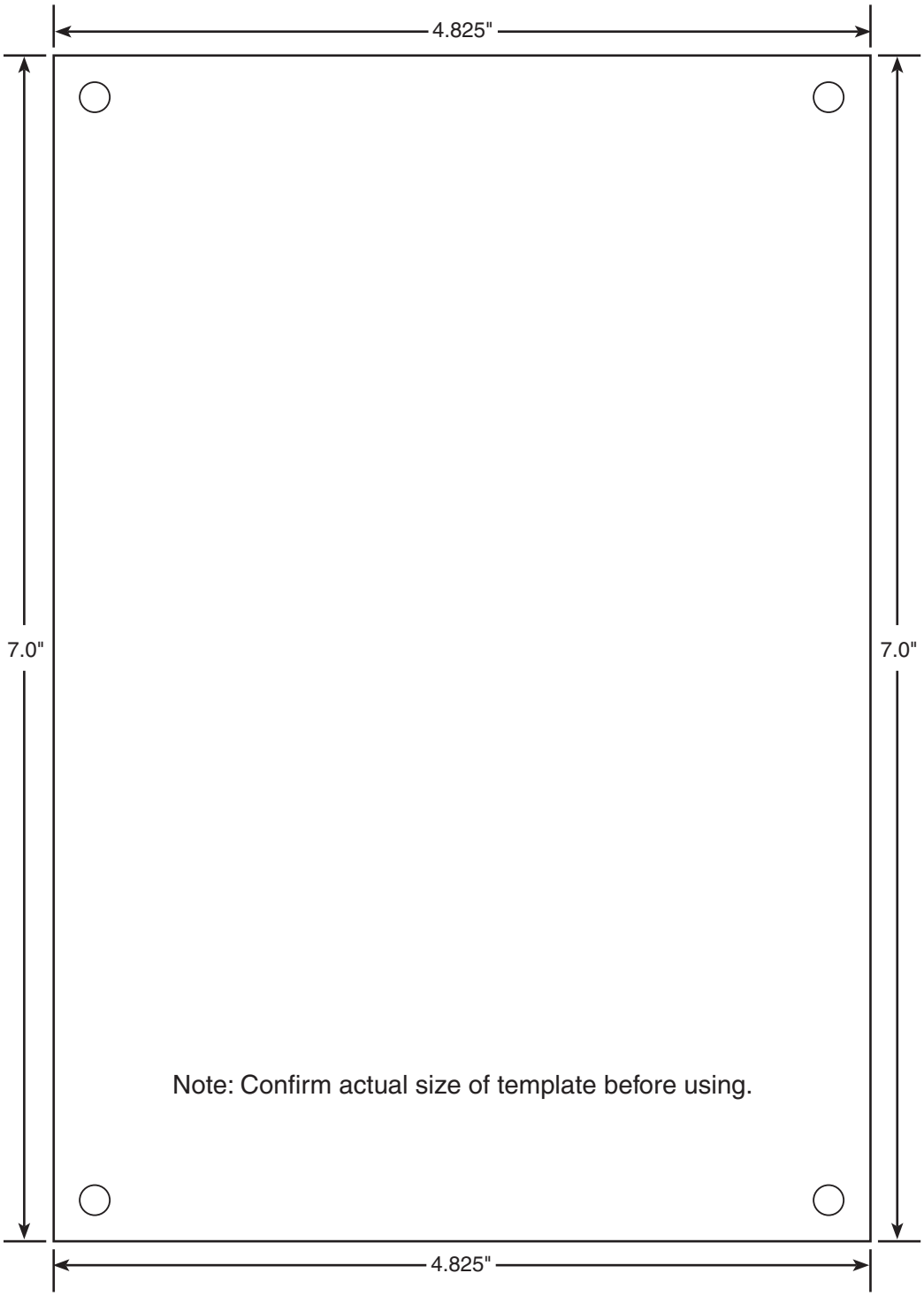

Figure 1: Hole Template

TECHNICAL SUPPORT: 1-888-725-9797

White-Rodgers is a business of Emerson Electric Co.

The Emerson logo is a trademark and service mark of Emerson Electric Co.

White-Rodgers™

www.white-rodgers.com
www.emersonclimate.com

EMERSON™
Climate Technologies