

Little GIANT®

VCC-20-P SERIES

APPLICATIONS

- Designed for automatic collection and removal of condensate from air conditioning, refrigeration, and dehumidification equipment installed in air handling and plenum applications having limited space and where gravity drainage is not possible or practical.
- The VCC-20-P is constructed with plastics that have been tested by Underwriter's Laboratories' to UL Standard 2043 "Fire Test for Heat and Visible Smoke Release for Discrete Products and Their Accessories Installed in Air Handling Spaces".



FEATURES

- The pump meets the requirements of UL 2043 and is labeled "For Plenum Applications".
- 1/30 hp motor
- 1-3/4" low profile tank height ideal for tight spaces
- Vertical centrifugal pump design
- 1.2 quart (1.1 liters) capacity tank
- Automatic start and stop switch
- 3/8" O.D. barbed discharge adapter with built-in check valve (installed on the pump)
- 1-1/8" diameter inlet
- Float-activated auxiliary high-level switch
  - Two 72" high-level switch lead wires
- Thermally protected, fan-cooled motor
- Intermittent liquid temperature up to 140 °F
- 20' shut-off head (115V model)
- Designed for hard-wire installation only
- 72" 3-conductor lead wires with conduit fitting for ½" diameter flexible metal conduit
- Stainless motor shaft
- cCSAus listed

SERIES SPECIFICATIONS

Item No.	Model No.	HP	Volts	Hz	Amps	Watts	Performance (GPM at Head)			Shut-Off (ft)	PSI	Weight
							1'	5'	10'			
554220101	VCC-20-P	1/30	115	60	1.5	93	80	70	45	20'	8.6	4.5 lbs/2.05 kg
554220102	VCC-20-P	1/30	230	50/60	0.6/0.5	60	80	70	45	17'	7.4	4.5 lbs/2.05 kg

Note: GPH is through check valve

Franklin Electric

VCC-20-P SERIES

ENGINEERING DATA

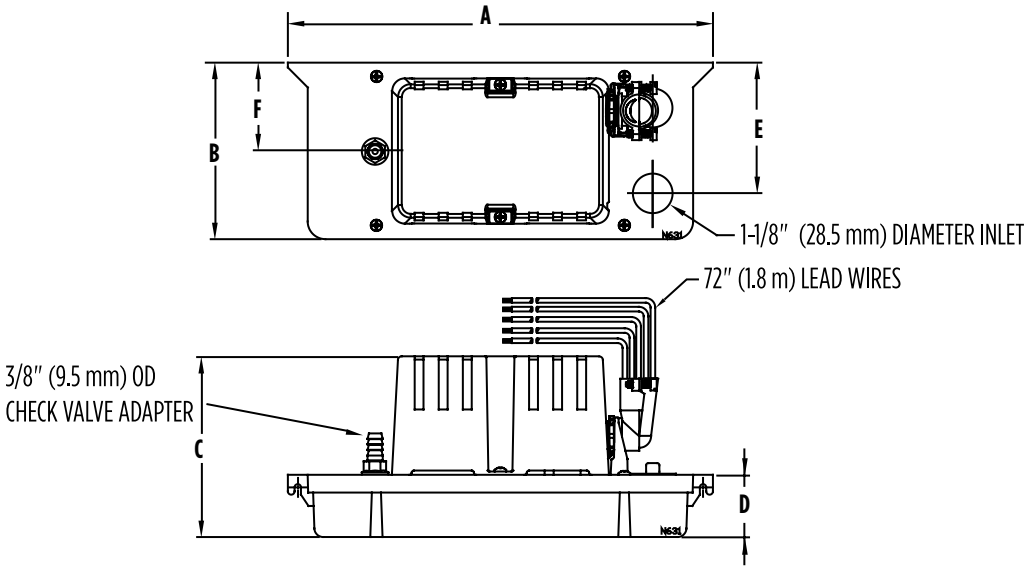

A	B	C	D	E	F
12" (304.8 mm)	5" (127 mm)	5.09" (129.31 mm)	1.75" (44.6 mm)	3.70" (93.9 mm)	2.50" (63.5mm)

PERFORMANCE

VCC-20-P 115 V and 230 V, 60 Hz

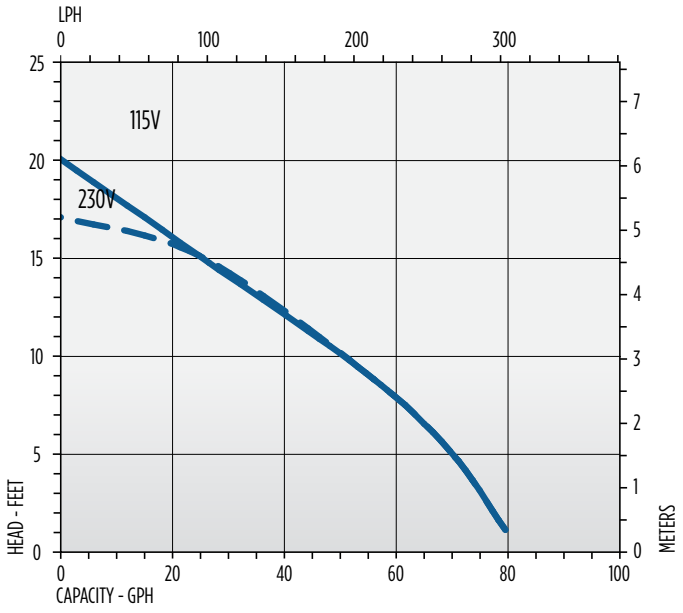

CONSTRUCTION

Tank	G.F. Polypropylene
Tank Cover	G.F. Polypropylene
Motor/Switch Cover	G.F. Polypropylene
Volute Cover	G.F. Polypropylene
Impeller	G.F. Polypropylene
Volute Cover Seal Ring	EPDM
Check Valve /Adapter	Acetal
Motor Shaft	Stainless Steel
Fasteners	Stainless Steel