Installation Instructions

Part No. CRHEATER323A00–CRHEATER341A00, CRSINGLE 037A00, 038A00, 040A00

SAFETY CONSIDERATIONS 1
PACKAGE USAGE 2
Carrier Models 2
Bryant Models 2
ICP Models 2
PACKAGE CONTENTS 2
Electric Heaters 2
- CRHEATER323A00 – CRHEATER341A00

Single Point Boxes 2
- CRSINGLE037A00
- CRSINGLE038A00
- CRSINGLE040A00

GENERAL 3
Puron® Units 3
Electric Heaters 3
Single Point Boxes and Fuses 3
- NO FUSES
- UNITS WITH FACTORY-INSTALLED HACR
- SINGLE POINT BOX CONTENTS

Control Wiring 3
GENERAL INSTALLATION SEQUENCE 6
INSTALLATION INSTRUCTIONS 6
Installing Single Point Box 6
Installing Electric Heater 8
UNIT POWER SUPPLY WIRING – ALL UNITS . . 12
New Unit Without Factory-Installed Non-Fused Disconnect or HACR 12
- INSTALLATION WITHOUT SINGLE POINT BOX
- INSTALLATION WITH SINGLE POINT BOX

New Unit With Factory Disconnect 12
New Unit With Factory HACR (50GC Only) 12
Existing Unit 13
Complete Unit Installation 13
APPENDIX A — AC-1, AC-2 COOLING APPLICATIONS 16
APPENDIX B — ELECTRIC HEATER DATA . . . 19

IMPORTANT: Read these instructions completely before attempting to install this accessory.

SAFETY CONSIDERATIONS

Improper installation, adjustment, alteration, service, maintenance, or use can cause explosion, fire, electrical shock or other conditions which may cause personal injury or property damage. Consult a qualified installer, service agency, or your distributor or branch for information or assistance. The qualified installer or agency must use factory-authorized kits or accessories when modifying this product. Refer to the individual instructions packaged with the kits or accessories when installing.

Follow all safety codes. Wear safety glasses and work gloves. Use quenching cloths for brazing operations and have a fire extinguisher available. Read these instructions thoroughly and follow all warnings or cautions attached to the unit. Consult local building codes and appropriate national electrical codes (in USA, ANSI/NFPA70, National Electrical Code (NEC); in Canada, CSA C22.1) for special requirements.

It is important to recognize safety information. This is the safety-alert symbol ⚠. When you see this symbol on the unit and in instructions or manuals, be alert to the potential for personal injury.

Understand the signal words DANGER, WARNING, CAUTION, and NOTE. These words are used with the safety-alert symbol. DANGER identifies the most serious hazards which **will** result in severe personal injury or death. WARNING signifies hazards which **could** result in personal injury or death. CAUTION is used to identify unsafe practices, which **may** result in minor personal injury or product and property damage. NOTE is used to highlight suggestions which **will** result in enhanced installation, reliability, or operation.

⚠WARNING

ELECTRICAL SHOCK HAZARD

Failure to follow this warning could cause personal injury or death.

Before performing service or maintenance operations on unit, turn off main power switch to unit and install lock(s) and lock-out tag(s). Ensure electrical service to rooftop unit agrees with voltage and amperage listed on the unit rating plate. Unit may have more than one power switch.

⚠WARNING

CUT HAZARD

Failure to follow this caution may result in personal injury.

Sheet metal parts may have sharp edges or burrs. Use care and wear appropriate protective clothing, safety glasses and gloves when handling parts and servicing air conditioning equipment.

PACKAGE USAGE

Carrier Models

MODEL NUMBER	CHASSIS GROUP	UNIT SIZES
50FC	AC-1	04-07
50GC	AC-2	04-06

Bryant Models

MODEL NUMBER	CHASSIS GROUP	UNIT SIZES
559K	AC-1	04-07
551K	AC-2	04-06

ICP Models

MODEL NUMBER	CHASSIS GROUP	UNIT SIZES
RAV	AC-1	036-072
RAW	AC-2	036-060

AC: Cooling only (air conditioner)
1 – Standard Efficiency
2 – High Efficiency

PACKAGE CONTENTS

Electric Heaters

CRHEATER323A00 – CRHEATER341A00

CONTENTS	QUANTITY
Heater module	1
Screws	4
Wiring label	1
Red wire (10 gage)*	1
Splice connector*	1
Wire tie	1
Label, max temp/static	1

* Supplied with electric heater packages CRHEATER323A00–327A00, 329A00–331A00 only.

Single Point Boxes

CRSINGLE037A00

ITEM DESCRIPTION	QUANTITY
Single point box housing assembly (Height 18-in./449 mm)	1
Terminal block	1
Conductors, tap, #10	3
Rain shield with conduit seal	1
Screws, #10 x 1/2-in.	12
Wire ties	7
Tube clamp	1
Seal strip	1

CRSINGLE038A00

ITEM DESCRIPTION	QUANTITY
Single point box housing assembly (Height 18-in./449 mm)	1
Terminal block/fuse holder	1
Fuse block	1
Fuses, 60-A class RK5	6
Power distribution harness	1
Conductors, tap, #10	3
Rain shield with conduit seal	1
Screws, #10 x 1/2-in.	12
Wire ties	7
Tube clamp	1
Seal Strip	1

CRSINGLE040A00

ITEM DESCRIPTION	QUANTITY
Single point box housing assembly (Height 18-in./449 mm)	1
Terminal block/fuse holder	1
Fuse block	1
Fuses, 60-A class RK5	4
Power distribution harness	1
Conductors, tap, #10	2
Rain shield with conduit seal	1
Screws, #10 x 1/2-in.	12
Wire ties	7
Tube clamp	1
Seal Strip	1

GENERAL

Puron® Units

This installation instruction manual describes the installation of electric heaters and associated fuse block/field power termination kits (single point box [SPB]) on select small rooftop units in nominal cooling capacities from 3 to 6 tons. These rooftop units use R-410A refrigerant. See Package Usage tables on page 2 for applicable unit models. Unit types include cooling units (AC). Unit types AC-1, AC-2, are identified.

This information does not include selection data. Refer to project plans, job submittals and selection programs for heater and field power termination/SPB kit usage.

Electric Heaters

Heaters are shipped with one heater per carton. The carton is marked with a sales package number. On all heaters the heater model number (as marked on the heater dataplate) is the same as the sales package number.

The heaters are modular in design, with heater frames holding open coil resistance wires strung through ceramic insulators, limit switches and one or two control contactors. Power conductors are attached.

Heater modules are installed in the compartment below the indoor (supply) fan outlet. Access is through the indoor access panel. Heater modules slide into the compartment through the panel heater opening.

Not all available heater modules may be used in every unit. Use only those heater modules that are UL listed for use in a specific size unit. Refer to the label on the unit cabinet for the list of approved heaters. (See Fig. 1 and 2.) See Appendix B on page 19 for electric heater module data.

Single Point Boxes and Fuses

The Single Point Box (SPB) kits provide a field power termination location plus an enclosure for heater fuses when required by code. The SPBs are installed under the unit's main control box and include a cover plus all internal wiring. Minimum components of the SPB are a field power terminal block with tap conductors (to connect to the unit's main control box field terminals). Maximum component population includes up to five fuse blocks.

Fuses for electric heater circuits are required and provided when the unit's MOCP exceeds 60-A or when the total heater Full Load Amp value exceeds 48-A. When fuses are required and provided, the cooling circuit is also provided with fuse protection.

NO FUSES

If the unit's MOCP device rating is 60-A or less, then the MOCP device is recognized as providing the required overcurrent protection to the heater and no internal fusing is required. See tables at the beginning of Appendix A on page 16 for where-used information on the single point boxes and for connections figure number.

UNITS WITH FACTORY-INSTALLED HACR

The amp rating of the HACR factory-installed option is based on the size, voltage, indoor motor and other electrical options of the unit as shipped from the factory. When field-installed accessory electric heaters are added or changed in the unit, the HACR may no longer be of the proper amp rating and therefore will need to be removed from the unit. See unit nameplate and label on factory-installed HACR for the amp rating of the HACR that was shipped with the unit from the factory. See unit nameplates for the proper fuse, HACR or maximum over-current protection device required on the unit with field-installed electric heat.

SINGLE POINT BOX CONTENTS

See Package Content tables on page 2 for a list of components included in each single point box kit.

Control Wiring

Heater modules contain one or two heater control contactors. If two-circuit heater module is installed, the cooling unit (AC type) can be connected for one-stage or two-stage heating control.

Carrier Corporation
7310 WEST MORRIS STREET
INDIANAPOLIS, IN 46231 U.S.A.

MODEL **50FC-A06A2A5A0A0A0**
SERIAL
REFRIGERANT CHARGE R410A



Carrier Corporation
7310 WEST MORRIS STREET
INDIANAPOLIS, IN 46231 U.S.A.

MODEL **50FC-A06A2A5A0A0A0**
SERIAL



	QTY	VOLTS AC	PH	HZ	RLA	LRA	REF. SYSTEM R410A		TEST PRESSURE GAGE		
COMPR A	1	208/230	3	60	16.0	110	8.2 LBS	3.7 kg	HI	650 PSI	4482 kPa
COMPR B							LBS	kg	LO	450 PSI	3103 kPa
FAN MTR	QTY	VOLTS AC	PH	HZ	FLA		LBS	kg			
OUTDOOR	1	208/230	1	60	1.5						
INDOOR	1	208/230	3	60	8.6						
ELEC. HEAT											
OTHER											
ERV SUPPLY											
ERV EXHAUST											
ERV WHEEL											

CHARGE SYSTEM PER INSTALLATION INSTRUCTIONS
SUITABLE FOR OUTDOOR INSTALLATION

POWER SUPPLY	PH	HZ	MIN. CKT AMPS	MAX FUSE OR HACR BREAKER PER NEC	MIN UNIT DISCONNECT	
					FLA	LRA
208/230 VOLTS	3	60	31	45	26	144
PERMISSIBLE VOLTAGE AT UNIT 253 MAX 187 MIN				MAX OVERCURRENT PROTECTION DEVICE –		

CONTROL PANEL SCCR: 5kA RMS SYMMETRICAL VOLTAGE: MAX

DOWN SUPPLY
MIN CLEARANCE TO COMBUSTIBLE MATERIALS 1 INCHES 25 mm.
FOR FIRST 12 INCHES 305 mm. OF DUCT WHEN ELECTRIC HEATER IS INSTALLED

SIDE SUPPLY
MIN CLEARANCE TO COMBUSTIBLE MATERIALS 1 INCHES 25 mm.
FOR FIRST 12 INCHES 305 mm. OF DUCT WHEN ELECTRIC HEATER IS INSTALLED

*FOR INSTALLATION ON COMBUSTIBLE FLOORING OR CLASS A,B, OR C ROOFING MATERIAL

ACCESSORY POWER EXHAUST OR HEATER MODEL NUMBER	CHECK HERE	VOLTS	PH	HZ	HEATER FLA	MIN. CKT. AMPS	FUSE OR HACR BREAKER PER NEC	MAXIMUM OVERCURRENT PROTECTION DEVICE	SINGLE PT. BOX MODEL NUMBER	MINIMUM UNIT DISCONNECT	
										FLA	LRA
324A		208/240	3	60	13.6/15.6	31/31	45/45	–/–	–	30/30	126/126
326A		208/240	3	60	21.9/25.3	39/43	45/45	–/–	–	35/39	126/126
328A		208/240	3	60	33.4/38.5	53/59	60/60	–/–	037	48/54	126/126
331A		208/240	3	60	43.8/50.5	66/74	70/80	–/–	038	60/68	126/126
332A		208/240	3	60	51.1/58.9	75/85	80/90	–/–	038	69/78	126/126

INSTALLER NOTE:
1. INSTALL ACCESSORY HEATER PER INSTALL INSTR ENCLOSED WITH HEATER. MARK SPACE "CHECK HERE" FOR MODEL USED. USE MIN CKT AMPS AND MAX OVER CURRENT DIVICE AMPS LISTED FOR HEATER.
2. HEATERS ARE MANUFACTURED BY EMERSON HEATING PRODUCTS OR TUTCO ELECTRIC.
3. MAXIMUM OUTLET AIR TEMPERATURE IS 93°C (200°F), MAXIMUM EXTERNAL STATIC IS 0.5 kPA (2.0" w.c.)

	CAPACITY Btu/Hr	CAPACITY kW	SEER	COP
COOLING	58500	17.1	14	

THIS EQUIPMENT COMPLIES WITH THE EFFICIENCY REQUIREMENTS OF ASHRAE 90.1-2016

Fig. 1 — Unit Informative Data Label

Carrier Corporation
7310 WEST MORRIS STREET
INDIANAPOLIS, IN 46231 U.S.A.

MODEL **50FC-A06A2A5A0A0A0**
SERIAL
REFRIGERANT CHARGE R410A

Carrier®

ELECTRICAL DATA FOR ACCESSORY POWER EXHAUST MODEL CRPWREXH

ACCESSORY POWER EXHAUST NUMBER	CHECK HERE	VOLTS	PH	HZ	POWER EXHAUST FLA	MIN CKT AMPS	FUSE OR HACR BREAKER PER NEC	MAXIMUM OVERCURRENT PROTECTION DEVICE	MINIMUM UNIT DISCONNECT
030A, 028A		208/230	1	60	1.9	32	45	-/-	FLA 32 LRA 128

ELECTRICAL DATA FOR ACCESSORY POWER EXHAUST MODEL INSTALLED IN COMBINATAION WITH ELECTRIC HEATER MODEL CRHEATER

ACCESSORY HEATER NUMBER	SINGLE PT BOX MODEL NUMBER	CHECK HERE	VOLTS	PH	HZ	HEATER FLA	FUSE OR HACR BREAKERPER NEC	MAXIMUM OVERCURRENT PROTECTION DEVICE	MINIMUM UNIT DISCONNECT
324A	-		208/240	3	60	13.6/15.6	MIN CKT AMPS 32/32		FLA 32/32
							45/45	-/-	LRA 128/128
326A	-		208/240	3	60	21.9/25.3	MIN CKT AMPS 41/45		FLA 37/41
							40/45	-/-	LRA 128/128
328A	038		208/240	3	60	33.4/38.5	MIN CKT AMPS 41/45		FLA 50/56
							60/60	-/-	LRA 128/128
331A	038		208/240	3	60	43.8/50.5	MIN CKT AMPS 41/45		FLA 62/70
							70/80	-/-	LRA 128/128
331A	038		208/240	3	60	51.1/58.9	MIN CKT AMPS 41/45		FLA 71/80
							80/90	-/-	LRA 128/128
							MIN CKT AMPS		FLA
									LRA

INSTALLER NOTE:

1. INSTALL ACCESSORY HEATER AND/OR POWER EXHAUST PER INSTALL INSTR ENCLOSED WITH HEATER AND POWER EXHAUST MARKSPACE “CHECK HERE” FOR MODEL USED USE MIN CKT AMPS AND MAX OVER CURRENT DIVICE AMPS LISTED FOR HEATER AND POWER EXHAUST.
2. HEATERS ARE MANUFACTURED BY EMERSON HEATING PRODUCTS OR TUTCO ELECTRIC.
3. MAXIMUM OUTLET AIR TEMPERATURE IS 93°C (200°F), MAXIMUM EXTERNAL STATIC IS 0.5 kPA (2.0” w.c.)

50FC-A06A2A5A0A0A0

Fig. 2 — Unit Informative Data Label, Power Exhaust Installed

GENERAL INSTALLATION SEQUENCE

1. Pre-stage heater packages and single point boxes by placing the required component cartons at each unit.
2. Check the heater sales package number and single point box part number (if used) against the part numbers on the unit's dataplate. See Fig. 1 and 2 for typical data.
3. Disconnect power wiring into unit control box from factory-installed non-fused disconnect switch or HACR breaker and withdraw wiring from control box.
4. Install the single point box and connect power wiring tap conductors to field power terminals in main control box.
5. Remove heater cover and save screws.
6. Install the electric heater module and connect heater power conductors to single point box or main unit control box per appropriate connections figure. (See Appendix A on page 16.) See Fig. 3 for typical installation.
7. Connect the heater control contactors to unit terminal block TB4.
8. Mark the unit dataplate to indicate which heater module(s) have been installed.
9. Note the required wire size ampacity for the field power supply conductors as marked on the unit dataplate as MIN CKT AMPS for accessory heater(s) plus convenience outlet and power exhaust when provided. Select and install suitable field power conductors from external safety disconnect to unit power connection points, or confirm wiring already provided is suitable for required MIN CKT AMPS.

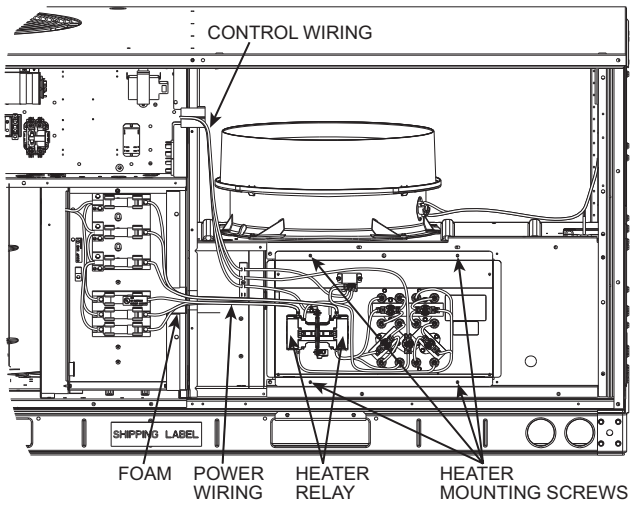

Fig. 3 — Typical Single Point Kit Installation

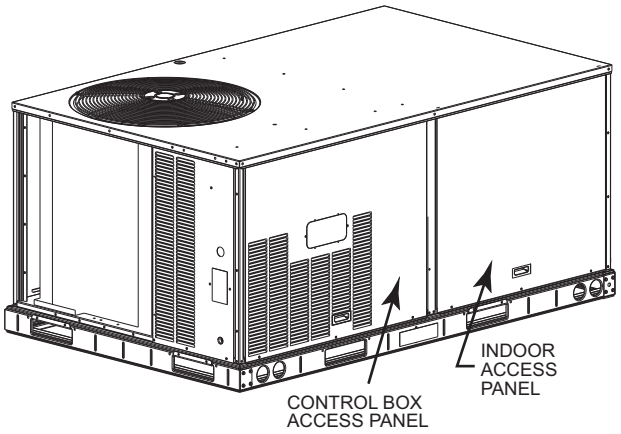

Fig. 4 — Typical Access Panel Location

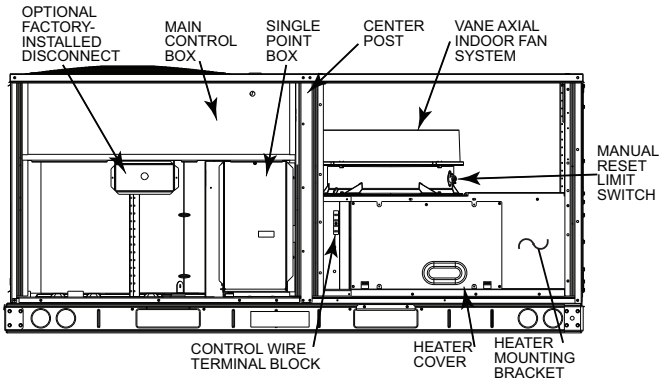

Fig. 5 — Typical Component Location

INSTALLATION INSTRUCTIONS

Compare the sales package number(s) for scheduled heater modules against the approved usage table on the unit's dataplate. See Fig. 1 and 2 for typical dataplate. If the scheduled heater usage does not appear on the unit dataplate label, STOP. Contact the project engineer or the local distributor sales office for clarification.

Open the cartons and inspect for damage.

Installing Single Point Box

1. Disconnect power to the unit. Lockout/tag-out on unit disconnect switch.
2. Remove the outdoor access panel, control box cover, and indoor access panels from the unit. Save screws. See Fig. 4.
3. Use a voltmeter to check that no power is present at unit terminal block.
4. Remove control box cover and center post. Save screws. (See Fig. 5.)
5. If unit does not have the factory-installed disconnect or HACR option or has not had field power wiring connected, skip to Step 6.
   When unit is equipped with factory-installed disconnect or HACR or has field power wiring connected, disconnect the power leads at the control box terminals and withdraw the conductors from the control box.
6. Add seal strip to the rear bottom corner of the control panel as shown in Fig. 6. Foil tape open screw holes on the back of the single point box as shown in Fig. 6. Different single point boxes will have different screw holes open.

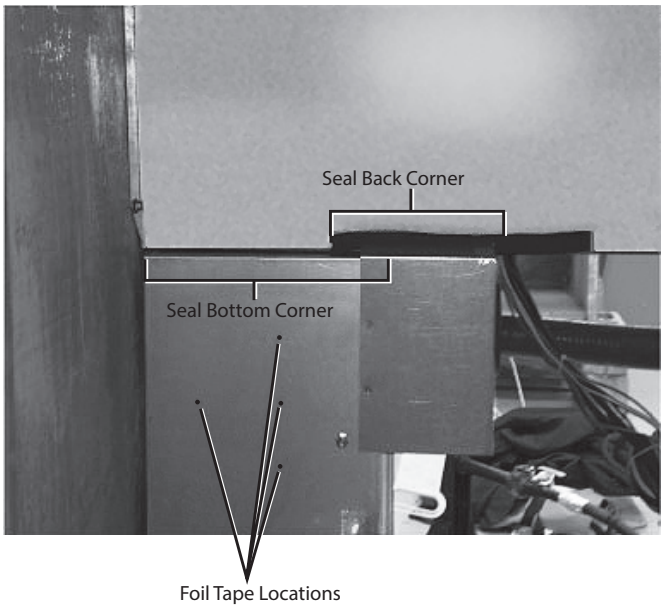

Fig. 6 — Seal Strip and Foil Tape Location

7. All bushings in the area of the control box where the single point box (SPB) mounts, must be removed prior to securing the SPB to the control box. (See Fig. 7.) Also, for units installed in the snow belt, all unplugged holes in the bottom of the control box which are not used must be plugged before installing the SPB. Use foil tape or reinstall the bushings from the outside of the control box prior to securing the SPB. (See Fig. 8.)

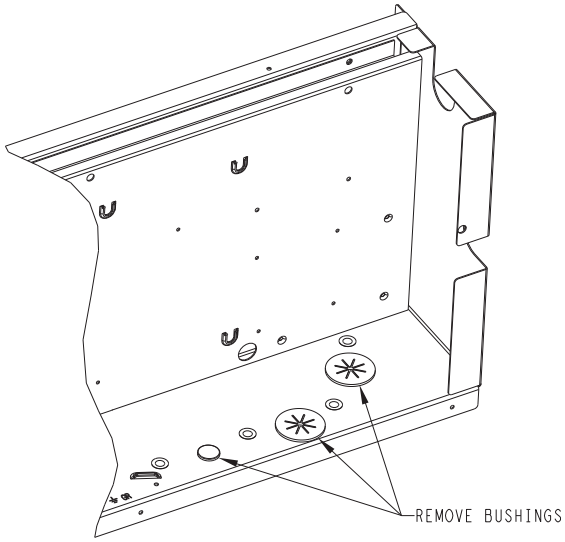

Fig. 7 — Control Box - Bushings to Remove

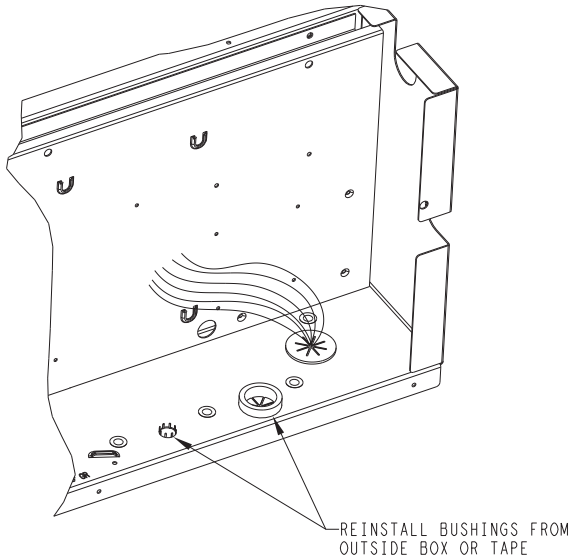

Fig. 8 — Bushings Replaced from Outside Control Box

8. Remove the single point box cover. Secure single point box to the underside of the control box with the 2 screws provided. (See Fig. 3.) Re-install bushing on the SPB tap conductors. (See Fig. 8.)
9. Secure the rainshield (conduit drip boot bracket) assembly to the back of the single point box with 2 of the screws provided. (See Fig. 5.) The channel portion of the bracket assembly extends to the top panel behind the control box. Secure all wires to bracket with field-supplied wire tie as shown. (See Fig. 9.)

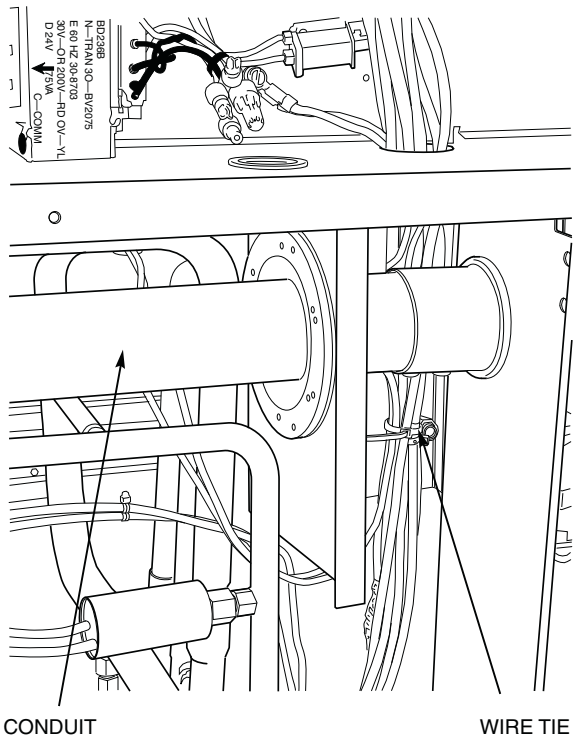

Fig. 9 — Typical Conduit Installation

10. Connect power tap conductors to unit main control box.

Single point boxes with two or three tap conductors

Route the tap conductors (with bushing added per Step 8) into the unit main control box. Connect the power tap conductors to the designated terminals in the unit's control box for field power

connections. Refer to the wiring diagram in the unit, to unit installation instructions for Field Power Wiring Connections or to Appendix A on page 16.

a. Route the first set of tap conductors (attached at upper fuse block, with bushing per Step 8) into the main control box.
b. Route the second set of tap conductors (attached at second fuse block) into the main control box.
c. Connect both sets of tap conductors to unit terminal block TB1; connect at:
   BLK: terminal 11
   YEL: terminal 12
   BLU: terminal 13

Installing Electric Heater

1. Identify heater cover to remove. See Fig. 10. Remove heater cover and save cover and screws.

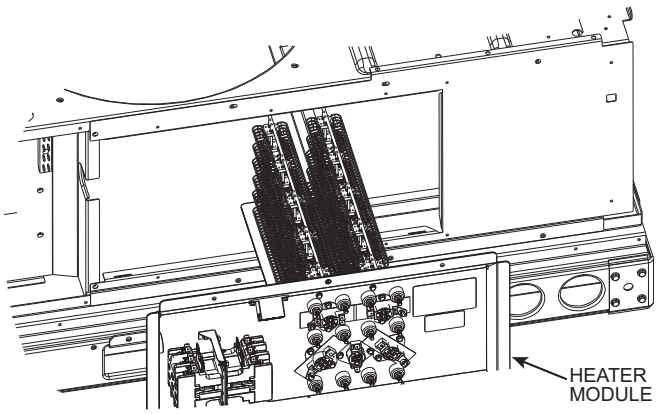

Fig. 10 — Typical Electric Heat Installation

2. Open the heater package and remove the heater module, screws, wiring label, miscellaneous parts.
3. Install the heater module in the heater support bracket opening(s). Fasten heater module to heater mounting bracket with the 4 screws saved from Step 1.
4. Single-phase heater conversion 208/230-v heaters 323A00-327A00, 329A00-331A00 are factory-wired for 3-phase applications but can be converted to single-phase by changing one wire as described below.
   Three-phase applications: Skip to Step 5. For single-phase application, rewire the heater as follows (see Fig. 11):
   a. Connect RED wire provided with kit to Heater Relay (HR) and to L1 as shown.
   b. Disconnect YELLOW wire from HR Terminal 2 and reconnect to HR Terminal 3.
   c. Using the wire tie provided, fasten the RED wire to heater power wire harness near existing wire tie on heater module. This provides strain relief for the RED wire. (See Fig. 12.)
      Connect the BLACK and RED conductors in the heater power wire harness to the same L1 pole on single point box TB or fuse block. Connect the BLUE and YELLOW conductors in the heater power wire harness to the same L2 pole on single point box TB or fuse block. (See Fig. 11.)
5. Route power wires from heater module through the foam bushing in the center partition and into the single point box. (See Fig. 3.) Connect to terminal block or fuse blocks per schematics in Appendix A or B. See Tables at beginning of each Appendix to identify the appropriate figure.
   All heaters are single bank heaters except CRHEATER327A00, 329A00-332A00, 337A00-338A00, and 341A00 which are dual bank heaters. These heaters will be wired as two heaters (i.e., 6 leads). Fusing is shown pictorially on the unit wiring schematic label. See Fig. 14 and 15.
   If no single point box is required for the unit and heater combination, run the heater power supply wiring through the grommet holes to the main unit control box's field power connection points or to optional factory-supplied disconnect.
6. Factory control wiring for heaters runs from unit control box to terminal block TB-4, mounted in the heater compartment to the left of the heater module. (See Fig. 5 and 13.) Connect the heater control wiring at TB-4.

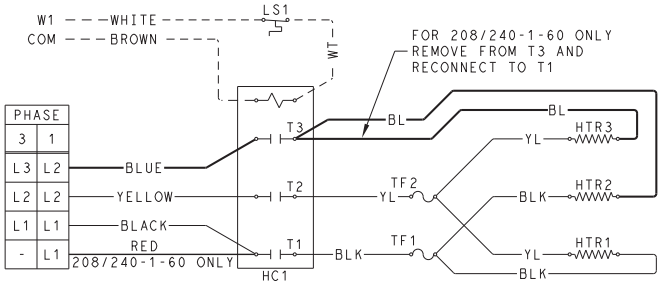

Fig. 11 — Single-Phase Heater Wiring

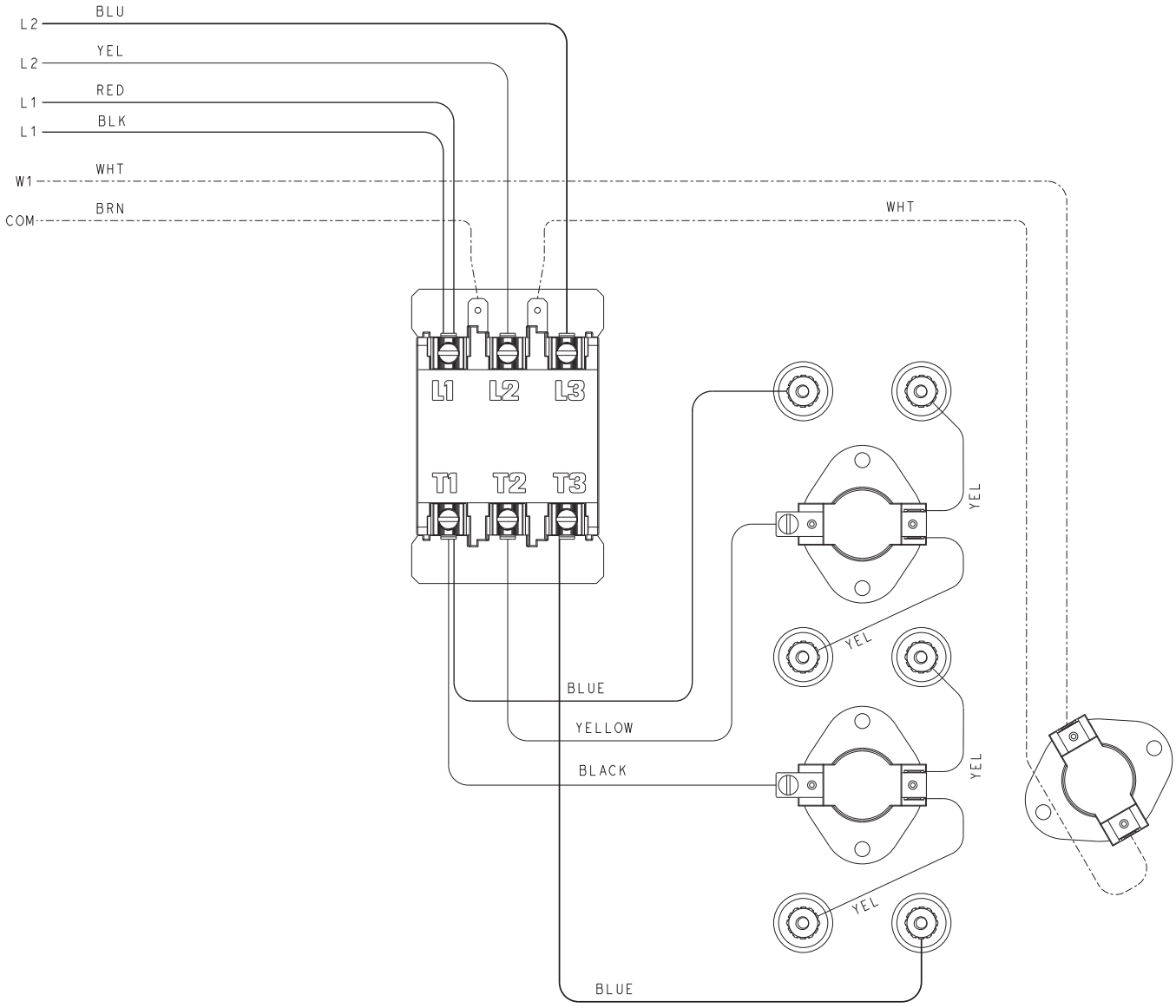

Fig. 12 — Typical Single-Phase Wiring Installed

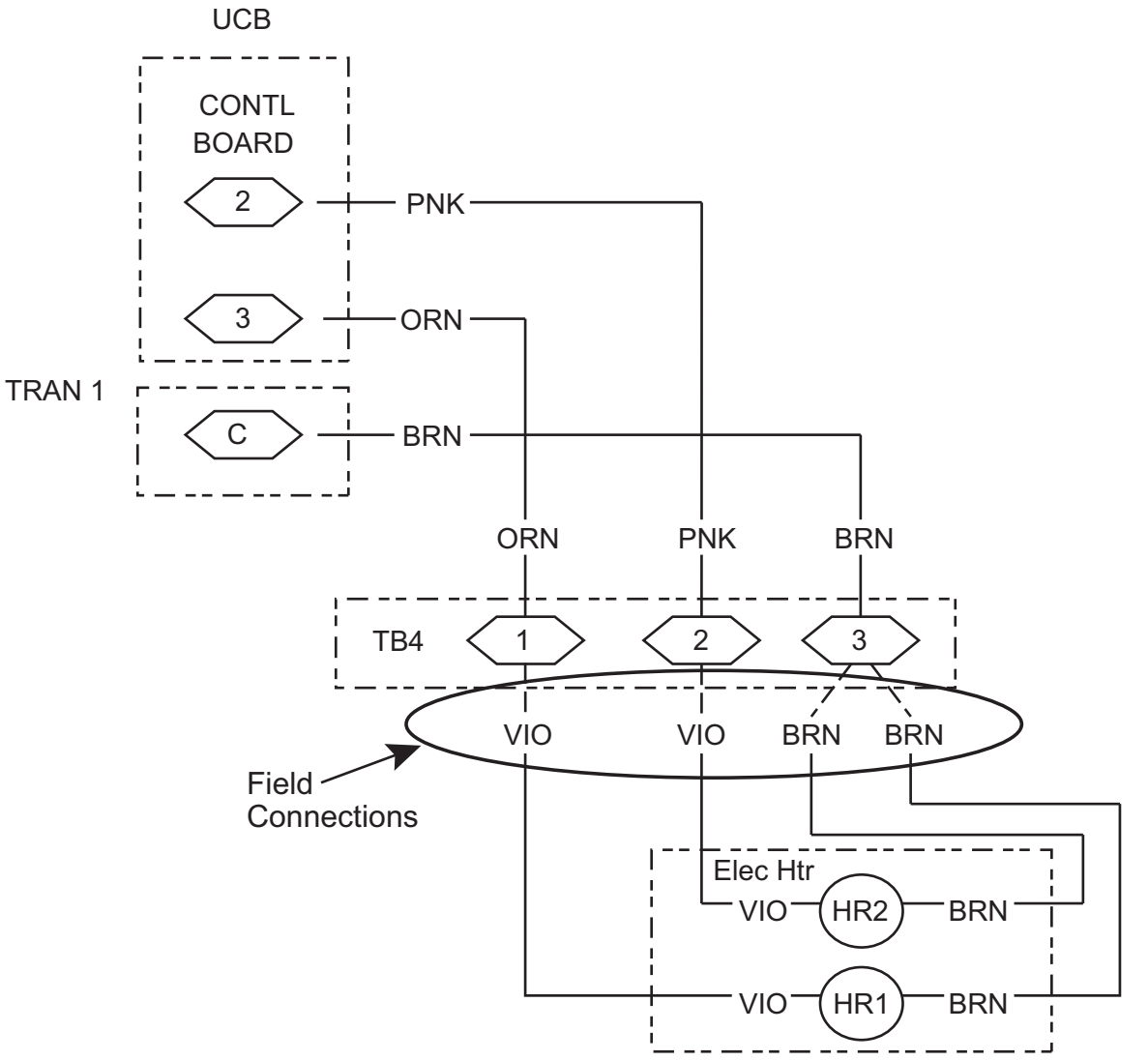

HR1: On Heater 1 in Position #1
HR2: On Heater 2 in Position #2 (if installed)

Fig. 13 — Accessory Electric Heater Control Connections

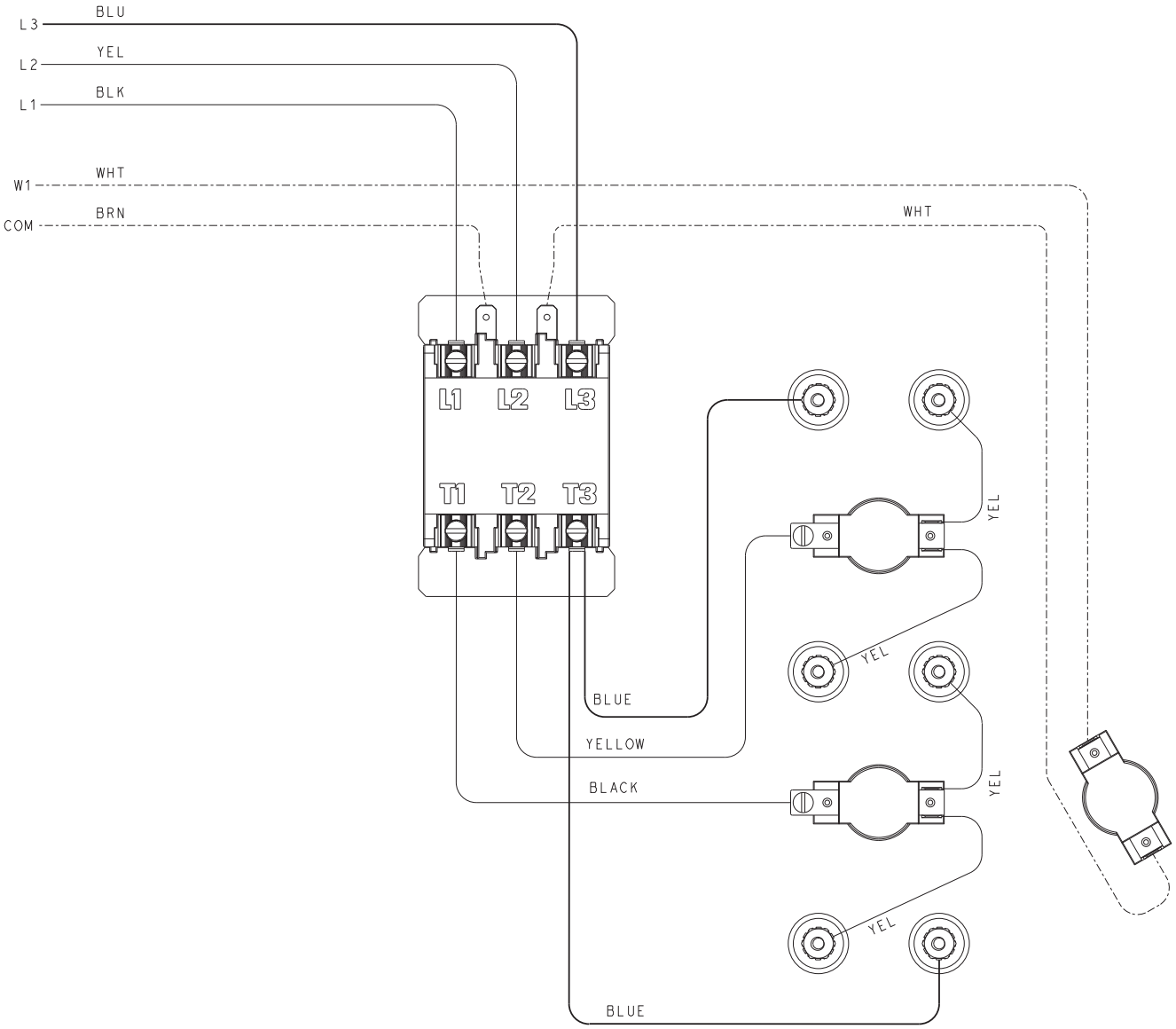

Fig. 14 — Typical 3-Phase Wiring Installed

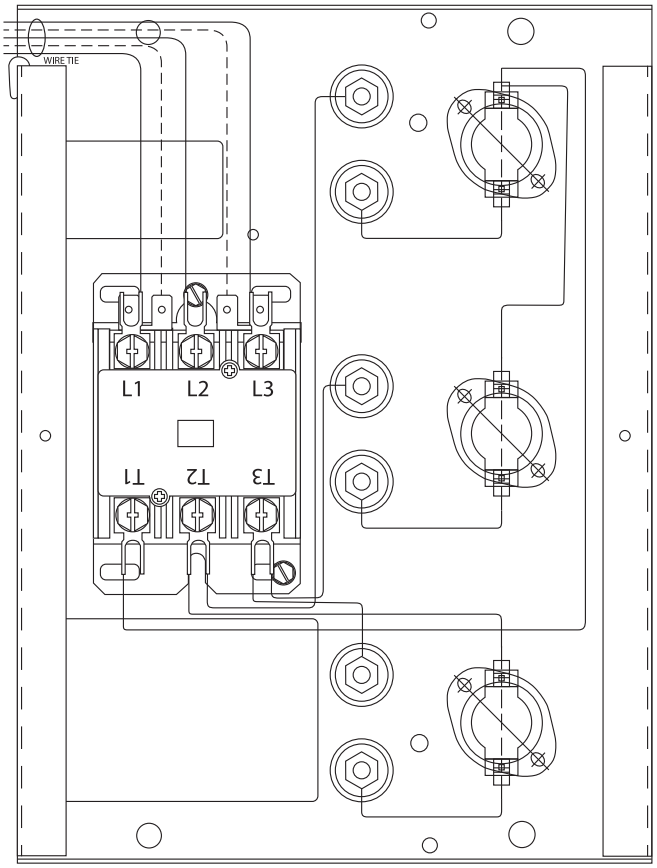

Fig. 15 — Typical 3-Phase Wiring Installed

UNIT POWER SUPPLY WIRING – ALL UNITS

NOTE: Installers of unit power supply wiring connecting to these air conditioning and heat pump units must be familiar with applicable requirements of the National Electrical Code (NFPA Standard 70), Articles 440, 430 and 424 dealing with multiple load systems incorporating refrigeration compressors, motors and electric heating equipment. Installers must also be familiar with and observe all local codes regarding unit power supply wiring.

In most instances, adding electric heaters to these units will result in an increase in unit power supply wire size compared to base unit electrical loads. These changes may also impact the size selection of the branch circuit overload protection device and the unit safety disconnect switch. Check the unit's informative data label (see Fig. 1 and 2 for examples) for minimum wiring sizing ampacity for full combined load (including power exhaust if also installed), for branch circuit protection size (a maximum value), and for unit minimum disconnect switch size.

DEVICE	DATAPLATE DESIGNATION
Power supply wire	MIN CKT AMPS
Branch circuit protection	FUSE OR HACR BREAKER
Disconnect switch	MINIMUM UNIT DISCONNECT

All wiring that terminates at a unit-mounted terminal must be selected from wiring materials under the NEC Table 310.15(B)(16), 75°C (or higher) column only. Check specifications for external disconnect lug sizes to determine if 60°C wiring materials may be used between branch circuit origin and the disconnect switch.

There are four different situations that an installer can encounter with these units. Three are for new unit installations (base unit has not been connected to a power supply already): Unit without factory disconnect switch, unit with factory disconnect switch, and unit with factory HACR breaker. The fourth situation is for an existing unit already connected to a power supply and the heaters are being retrofitted. For each situation, there is usually a without single point box and a with single point box condition. Each situation is discussed below.

New Unit Without Factory-Installed Non-Fused Disconnect or HACR

INSTALLATION WITHOUT SINGLE POINT BOX

Unit power supply wires from the external (field-supplied) disconnect switch are connected to the base unit's power connection terminal lugs. Refer to unit wiring label to identify these terminals (these may be lugs on contactors or at power terminal block). The heater power wires are also connected at these terminals.

INSTALLATION WITH SINGLE POINT BOX

Remove knockouts for appropriate size conduit from unit block-off panel and single point box. Install conduit (rigid or electrometallic tubing) through conduit drip boot as shown. (See Fig. 9.) Drip boot will accept conduit sizes $^{3}/_{4}$-in. to $1^{1}/_{2}$-in. The drip boot eliminates the need for watertight conduit fittings at the single point box.

Unit power supply wires from the external (field-supplied) disconnect switch are connected to the power lugs on the field connection device provided in the single point box. This device may be a terminal block or fuse block FU2's line side terminals. The heater power wires are connected to the load side terminals on the same device.

New Unit With Factory Disconnect

The optional factory-supplied disconnect has a maximum rating per Table 1.

Table 1 — Optional Factory Installed Disconnect Amp Ratings

UNIT GROUP	UNIT SIZES	VOLTS	DISCONNECT SIZE AMPS
AC-1	04-07 036-072	208/230	80
		460, 575	60
AC-2	04-06 036-060	208/230	80
		460, 575	60

AC-1–Standard Efficiency
AC-2–High Efficiency

Check this unit's dataplate for the MINIMUM DISCONNECT SWITCH value (see Fig. 1 and 2) and compare to the Table 1 value.

If required minimum disconnect value is LOWER than rating in Table 1:

Reconnect the factory wiring from the factory disconnect at the single point box's terminal block or fuse block FU2's line side terminals (or to main control box's line connection lugs if no single point box is installed). Remove any factory test leads connected at disconnect line side terminals; discard these wires. Connect unit power supply wires to disconnect switch line side lugs.

If required minimum disconnect value is HIGHER than rating in Table 1:

For unit with 60-A, 80-A or 100-A disconnect

Remove the factory-installed non-fused disconnect switch assembly and wiring. Install a field-supplied disconnect switch sized per unit marking. Complete connections per instructions above under "New Unit Without Factory-Installed Non-Fused Disconnect or HACR."

New Unit With Factory HACR (50GC Only)

The amp rating of the HACR factory-installed option is based on the size, voltage, indoor motor and other electrical options of the unit as shipped from the factory.

When field-installed accessory electric heaters are added to the unit, the HACR may no longer be of the proper amp rating and therefore will need to be removed from the unit.

Check this unit's dataplate for the FUSE OR HACR BREAKER value (see Fig. 1 and 2) and compare to the factory HACR breaker rating value.

If marked HACR value on unit dataplate is UNCHANGED from rating unit-mounted HACR

Reconnect the factory wiring from the factory HACR at the single point box's terminal block or fuse block FU2's line side terminals (or to main control box's line connection lugs if no single point box is installed). Remove any factory test leads connected at HACR line side terminals; discard these wires. Connect unit power supply wires to HACR line side lugs.

If marked HACR value on unit dataplate is GREATER than rating on unit-mounted HACR

Remove the factory HACR switch assembly and wiring. Install a field-supplied fused or HACR disconnect switch sized per unit marking. Complete connections per instructions above under "New Unit Without Factory Disconnect or HACR."

Existing Unit

An existing unit will usually have been installed following the values marked on the base unit's dataplate for wire sizing, branch circuit over-current protection and disconnect switch rating. When electric heaters are added to air conditioning (cooling) units, these values may be changed; when electric heaters are added to heat pump units, one or more of these values will be changed.

Check the installed unit's field power wires for conductor size and determine conductor rated ampacity per NEC Table 310.15(B)(16). Compare this value to the MIN CKT AMPS value on the unit dataplate for base unit plus electric heaters (plus power exhaust if connected). If the MIN CKT AMPS value is greater than the rated ampacity of the power supply wires, the unit power supply conductors must be replaced.

NOTE: Supply wiring must comply with NEC (National Electrical Code) and all local requirements.

Check the installed unit's branch circuit over-current protection device (fuse or HACR breaker) for rating in amps. Compare this value to the FUSE OR HACR BREAKER value on the unit dataplate for base unit plus electric heaters (plus power exhaust if connected). If the FUSE OR HACR BREAKER value is greater than the rated ampacity of the installed device, the unit branch circuit over-current protection device must be replaced. Check the installed unit's disconnect switch for rating in amps. Compare this value to MINIMUM UNIT DISCONNECT value on the unit dataplate for base unit plus electric heaters (plus power exhaust if connected). If the MINIMUM UNIT DISCONNECT value is greater than the rated ampacity of the installed disconnect switch, the unit disconnect switch must be replaced.

To complete the unit power wiring at the Single Point Box or base unit terminals, follow the appropriate directions under "New Unit" discussions above.

Complete Unit Installation

1. Mark the appropriate block on the unit nameplate for the accessory heater kW installed. Note the required MIN CKT AMPS value for this unit-heater combination. Ensure the field power conductors are sized to handle this ampacity.
2. Locate the heater cover. For all heaters, the heater cover is the plate removed from the heater mounting bracket in Step 5 on page 6 (General Installation Sequence).
3. Place adhesive-backed wiring label on flanged side of heater cover.
4. Fasten heater cover to heater module with 2 screws provided with heater. Flanges of cover must face out. (See Fig. 16.)
5. Set manual reset limit switch (on supply fan housing) by depressing button located between the terminals on the switch. (See Fig. 5.)
6. Close single point box cover and secure with one screw.
7. Replace control box cover, using remainder of screws saved from page 6, Step 4 of Installing Single Point Box sections.
8. Run conduit through (rigid or EMT) the conduit drip boot in the rain shield bracket to the single point box. Provide an appropriate fitting to connect the conduit to the single point box wall and ground appropriately. (See Fig. 17.) Drip boot eliminates the need for watertight conduit fittings at the single point box.
9. Run wire through conduit connecting outside power to the designated terminals at the top of the single point box. Ground appropriately. (See Fig. 18.)
10. Replace indoor and outdoor panels with screws saved from Step 2 of Installing Single Point Box section on page 6. Place adhesive-backed Max. Air/Max. Static label on external panel that covers heaters. (See Fig. 4 and 19.)
11. If all other work on the unit is done, reapply unit power per lockout/tag-out procedures.

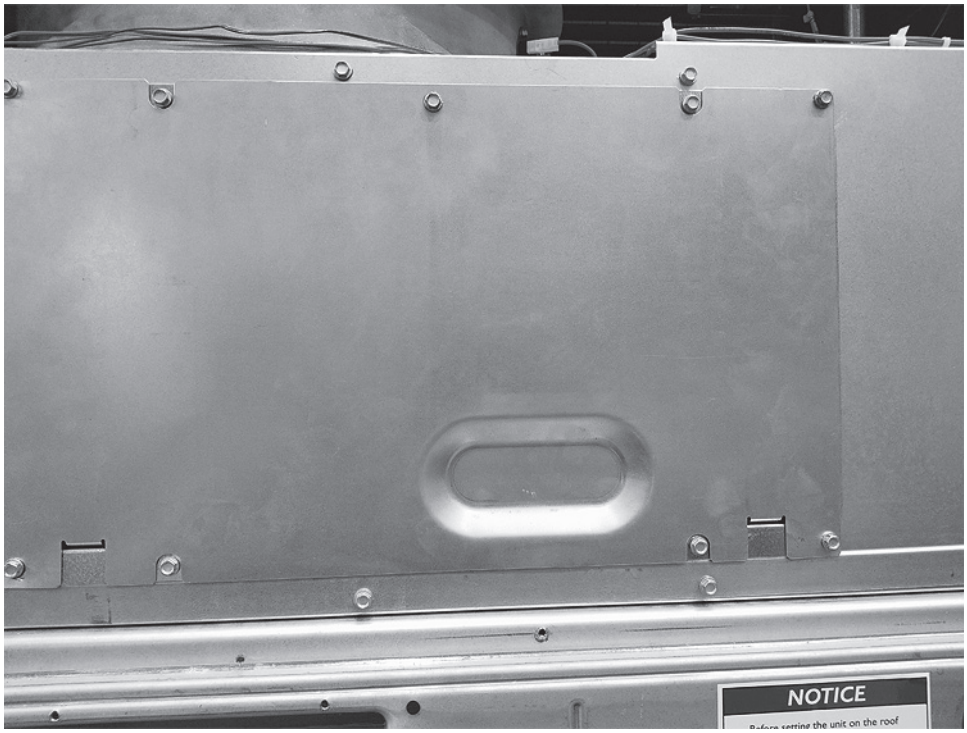

Fig. 16 — Heater Cover

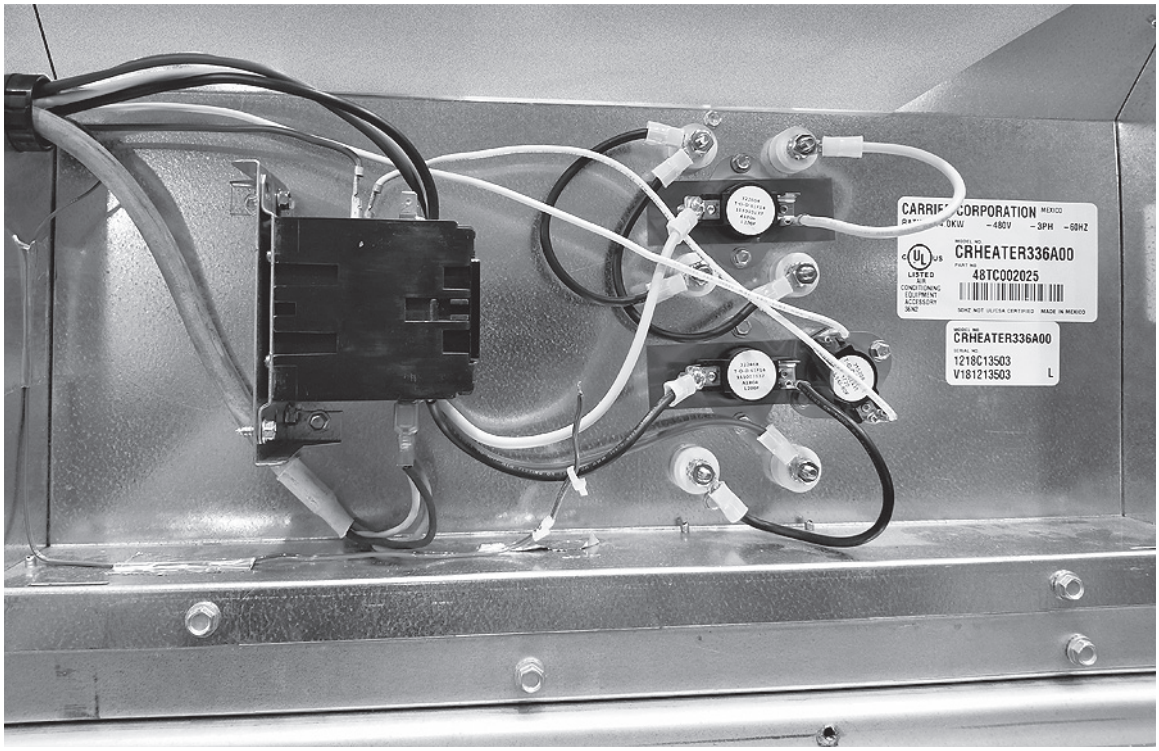

Fig. 17 — Heater Wiring

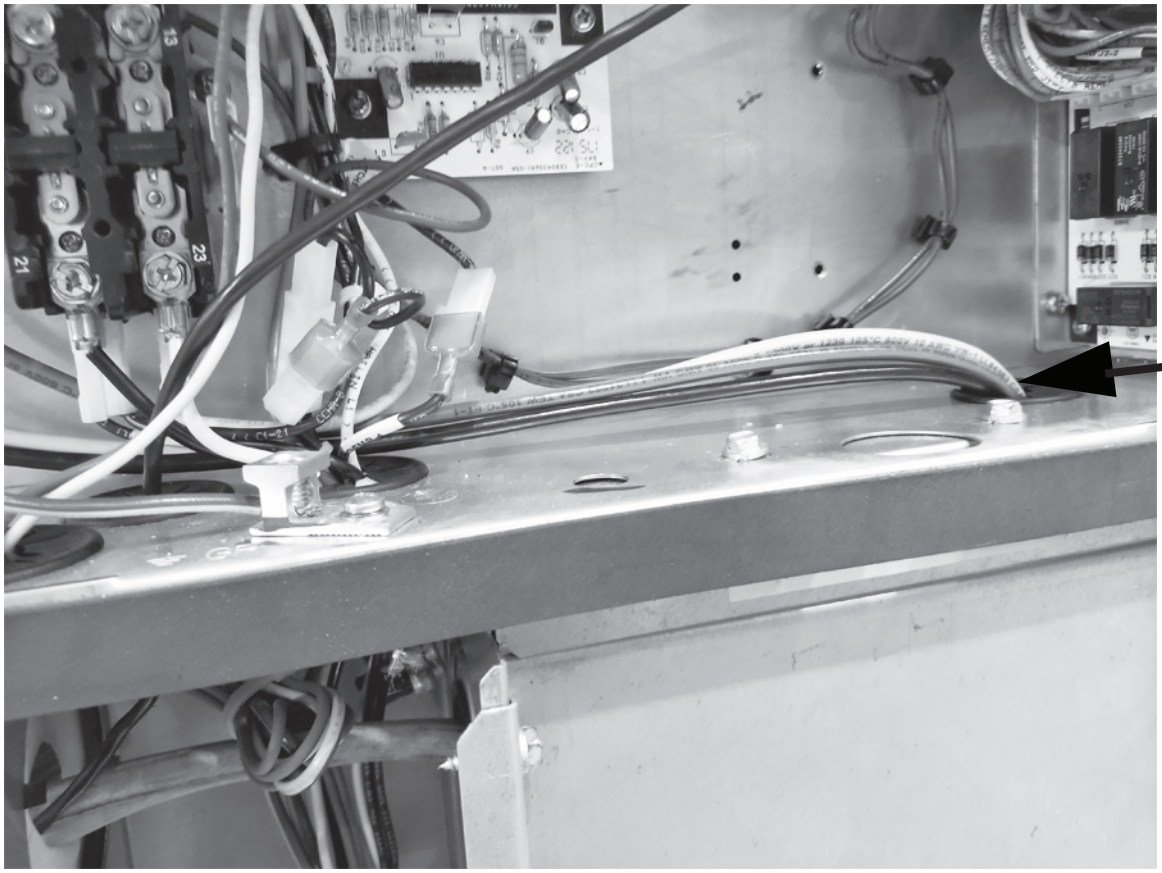

Fig. 18 — Typical Single Point Box Power Wiring

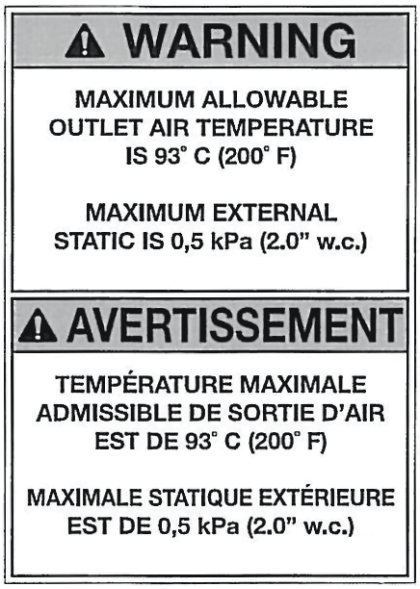

Fig. 19 — Max Air Temp/Max Ext. Static

APPENDIX A — AC-1, AC-2 COOLING APPLICATIONS

SPB CRSINGLExxxA00	AC-1 Units	AC-2 Units
	04-07 036-072	04-06 036-060
1-Phase (see page 8 for conversion instructions)		
037	Fig. 20	Fig. 20
040	Fig. 21	Fig. 21
3-Phase		
NONE	Fig. 22	Fig. 22
037	Fig. 23	Fig. 23
038	Fig. 24	Fig. 24

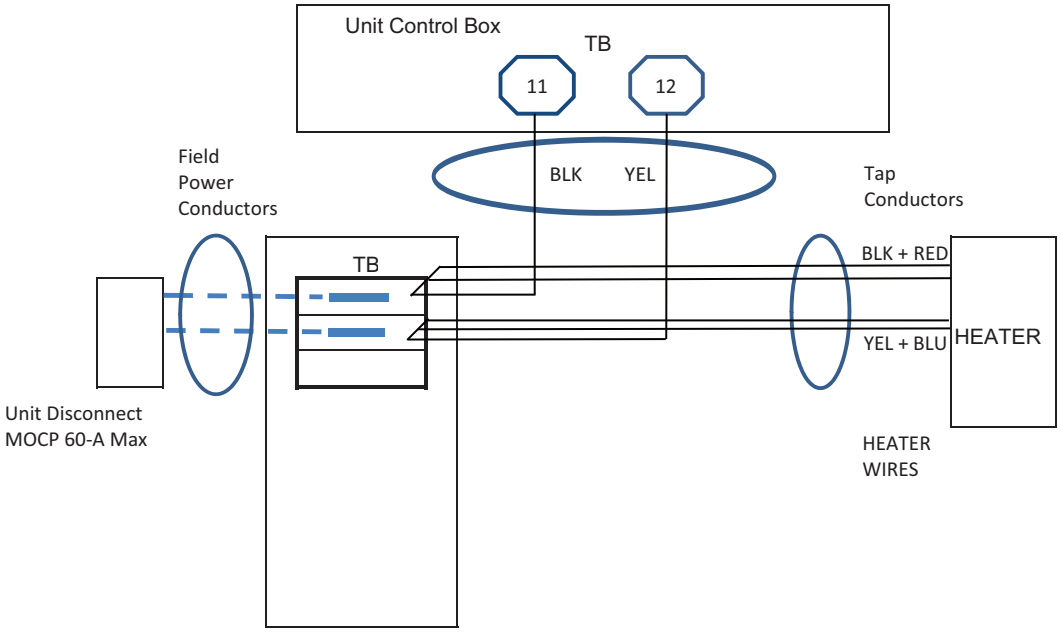

Fig. 20 — AC 1-Phase Single Point Box CRSINGLE037A00 (AC-1, Sizes 04-07 / 036-072, AC-2, Sizes 04-06 / 036-060)

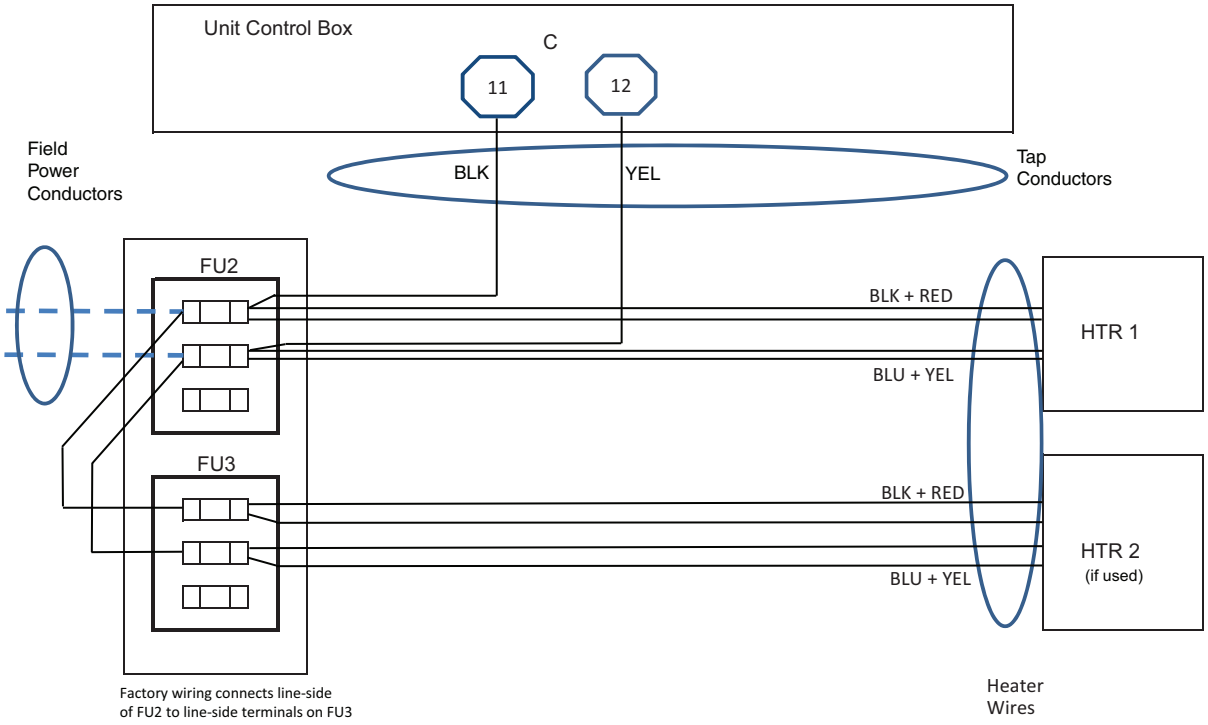

Fig. 21 — AC 1-Phase Single Point Box CRSINGLE040A00 (AC-1, Sizes 04-07 / 036-072, AC-2, Sizes 04-06 / 036-060)

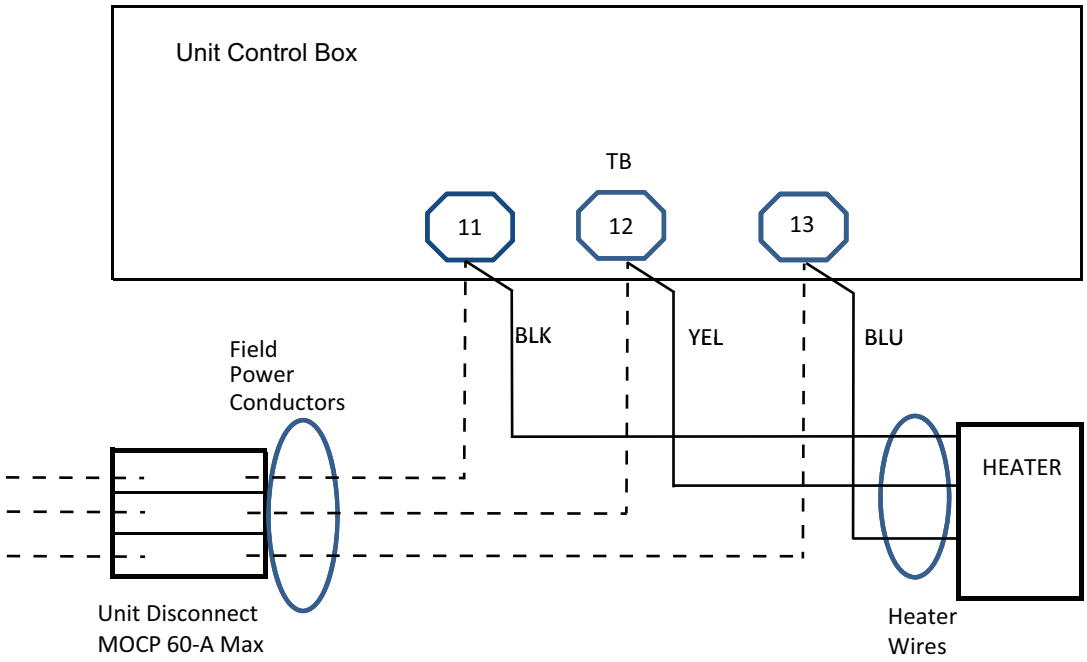

Fig. 22 — AC - No Single Point Box

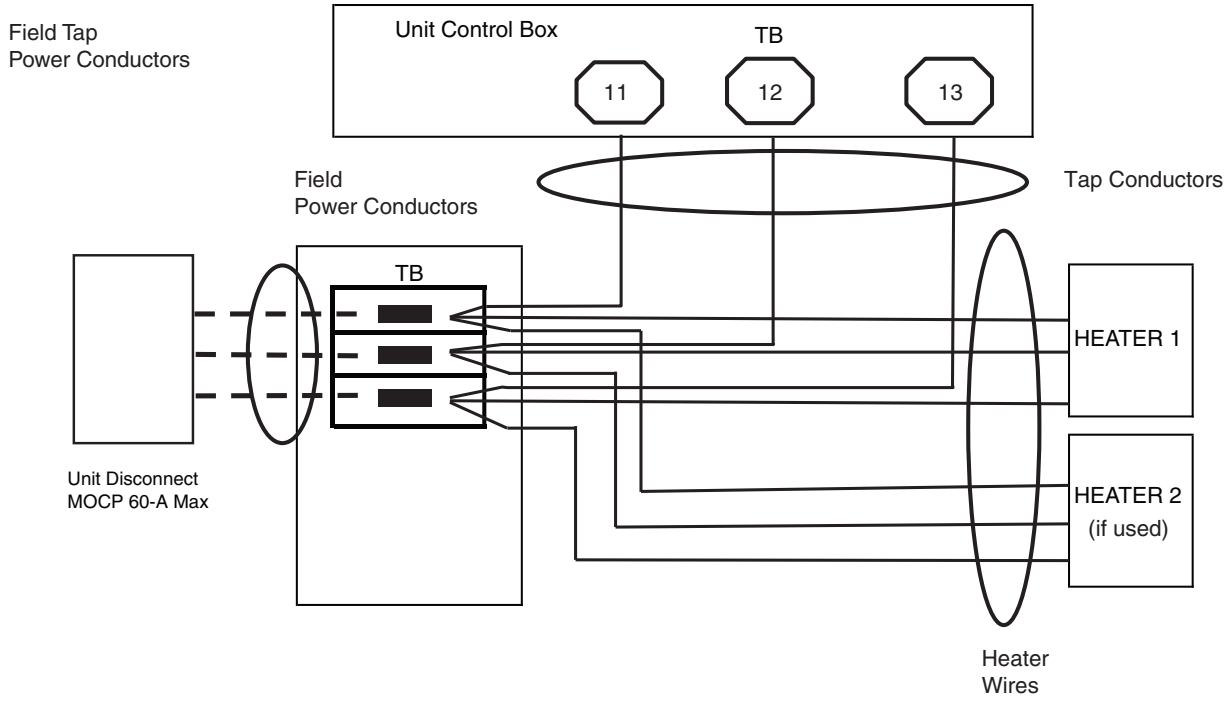

Fig. 23 — AC Single Point Box CRSINGLE037A00 (AC-1, Sizes 04-07 / 036-072; AC-2, Sizes 04-06 / 036-060)

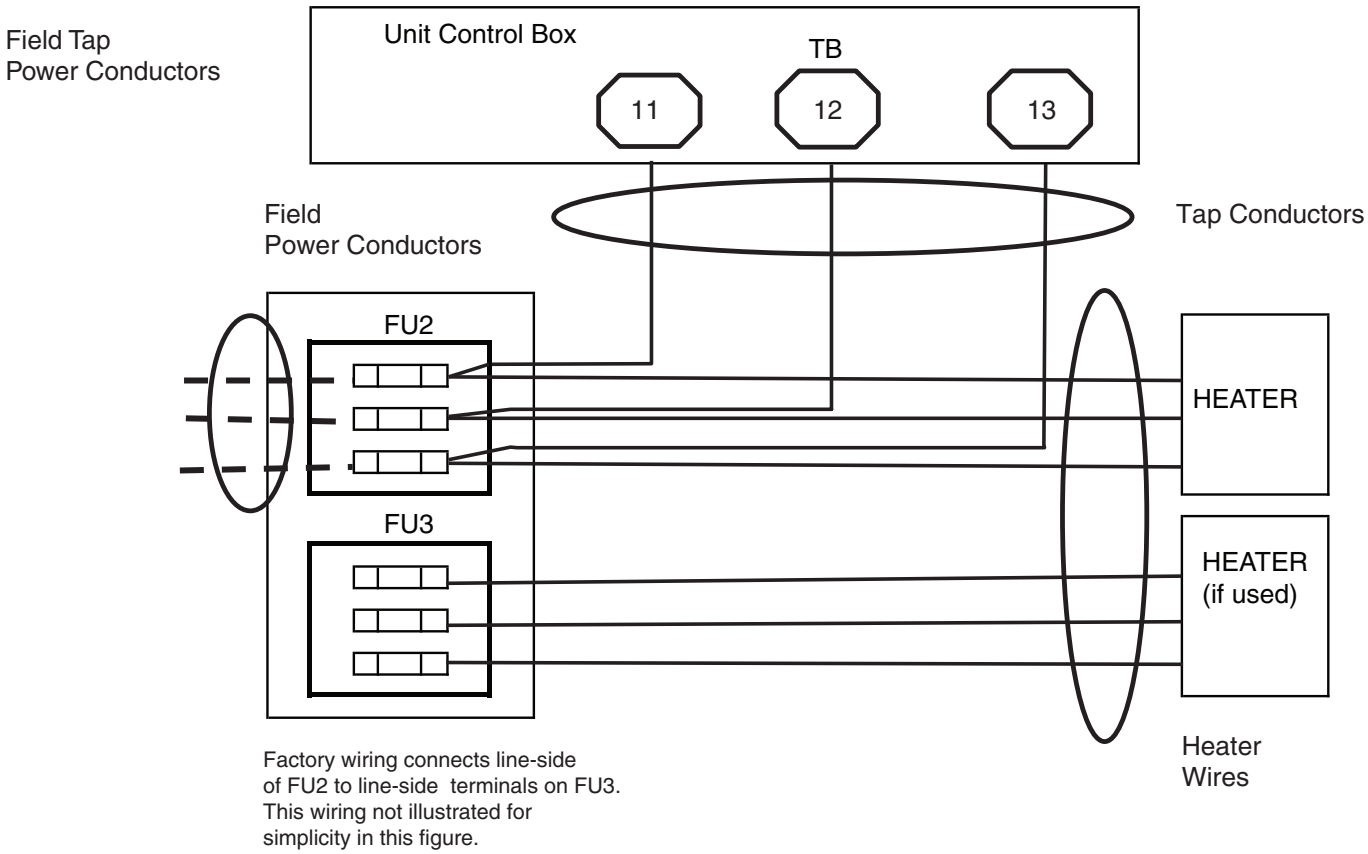

Fig. 24 — AC Single Point Box CRSINGLE038A00 (AC-1, Sizes 04-07 / 036-072; AC-2, Sizes 04-06 / 036-060)

APPENDIX B — ELECTRIC HEATER DATA

NOTE: ELECTRIC HEATER DATA (CRHEATERnnna00)

SALES PKG NBR	HEATER MODEL NBR	VOLTS	kW	FLA 1-PH	FLA 3-PH	NUMBER OF STAGES	USED ON	
							AC-1	AC-2
323A	323A	208/240	4.4	15.9/18.3	9.2/10.6	1	04-05 036-048	04-05 036-048
324A	324A		6.5	23.5/27.1	13.6/15.6	1	04-07 036-072	04-06 036-060
325A	325A		8.7	31.4/36.3	18.1/20.9	1		
326A	326A		10.5	37.9/43.8	21.9/25.3	1		
327A	327A		13	46.9/54.2	27.1/31.3	2		
328A	328A		16	—	32.3/37.3	1		
329A	329A		17.4	62.8/72.5	36.3/41.9	2	05-07 048-072	05-06 048-060
330A	330A		19.2	69.3/80.0	40.0/46.2	2	05, 060 downshot	05, 060 downshot
331A	331A		21	75.8/87.5	43.8/50.5	2	05-07 (except 05 downshot) 048-072 (except 048 downshot)	05-06 (except 05 downshot) 048-060 (except 048 downshot)
332A	332A		24.7	—	51.8/58.9	2	06-07 060-072	06 060
333A	333A	480	6	—	7.2	1	04-07 036-072	04-06 036-060
334A	334A		8.8	—	10.6	1	04 036	04 036
335A	335A		11.5	—	13.8	1	04-07 036-072	04-06 036-060
336A	336A		14	—	17.4	1		
337A	337A		21.5	—	25.9	2	05-07 048-072	05-06 036-060
338A	338A		24	—	28.9	2	06-07 060-072	06 060
339A	339A	600	10	—	9.6	1	04, 05 036, 048	04, 05 036, 048
340A	340A		15	—	14.4	1	04-07 036-072	04-06 036-060
341A	341A		25	—	24.1	2	06, 07 060, 072	06 060

© Carrier Corporation 2019

Manufacturer reserves the right to discontinue, or change at any time, specifications or designs without notice and without incurring obligations.

Catalog No. 04-53480247-01 Printed in U.S.A. Form IIK-CRHEATER-05 Pg 20 3-19 Replaces: IIK-CRHEATER-03