Control Replacement Kit
Ultra Low NOx, Condensing
Fixed Speed Furnace
346033-751, 346033-752, 346033-753

Installation Instructions

NOTE: Read the entire instruction manual before starting the installation.

SAFETY CONSIDERATIONS

Improper installation, adjustment, alteration, service, maintenance, or use can cause explosion, fire, electrical shock, or other conditions which may cause death, personal injury, or property damage. Consult a qualified installer, service agency, or your distributor or branch for information or assistance. The qualified installer or agency must use factory-authorized kits or accessories when modifying this product. Refer to the individual instructions packaged with the kits or accessories when installing.

Follow all safety codes. Wear safety glasses, protective clothing, and work gloves. Have a fire extinguisher available. Read these instructions thoroughly and follow all warnings or cautions include in literature and attached to the unit. Consult local building codes, the current editions of the National Fuel Gas Code (NFGC) NFPA 54/ANSI Z223.1 and the National Electrical Code (NEC) NFPA 70.

In Canada, refer to the current editions of the National Standards of Canada CAN/CSA- B149.1 and .2 Natural Gas and Propane Installation Codes, and Canadian Electrical Code CSA C22.1.

⚠Recognize safety information. This is the safety-alert symbol.

When you see this symbol on the unit and in instructions or manuals, be alert to the potential for personal injury.

Understand the signal words DANGER, WARNING, and CAUTION. These words are used with the safety- alert symbol. DANGER identifies the most serious hazards which will result in severe personal injury or death. WARNING signifies hazards which could result in personal injury or death. CAUTION is used to identify unsafe practices which may result in minor personal injury or product and property damage. NOTE is used to highlight suggestions which will result in enhanced installation, reliability, or operation

⚠ WARNING

FIRE, EXPLOSION, ELECTRICAL SHOCK HAZARD

Failure to follow this warning could result in personal injury, death and/or property damage.

The ability to properly perform maintenance on this equipment requires certain knowledge, mechanical skills, tools, and equipment. If you do not possess these, do not attempt to perform any maintenance on this equipment other than those procedures Recommended in the Owner's Manual.

⚠ WARNING

FIRE, EXPLOSION, ELECTRICAL SHOCK AND CARBON MONOXIDE POISONING HAZARD

Failure to follow instructions could result in personal injury, death or property damage.

Improper installation, adjustment, alteration, service, maintenance, or use can cause carbon monoxide poisoning, explosion, fire, electrical shock, or other conditions, which could result in personal injury or death. Consult your distributor or branch for information or assistance. The qualified installer or agency must use only factory- authorized kits or accessories when servicing this product.

⚠ WARNING

ELECTRICAL SHOCK HAZARD

Failure to follow this warning could result in personal injury or death.

Before installing, modifying, or servicing system, main electrical disconnect switch must be in the OFF position and install a lockout tag. There may be more than one electrical supply to the furnace. Check accessories and cooling unit for additional electrical supplies that must be shut off during furnace servicing. Lockout and tag switch with a suitable warning label. Verify proper operation after servicing.

INTRODUCTION

⚠ CAUTION

CUT HAZARD

Failure to follow this caution may result in personal injury.

Sheet metal parts may have sharp edges or burrs. Use care and wear appropriate protective clothing, safety glasses and gloves when handling parts, and servicing furnaces.

This kit is used to replace furnace control HK42EB002/1191482 on Series 1 Ultra Low NOx condensing, non-communicating furnaces. This kit contains all components required to update to the newer control and requires replacement of the furnace main wiring harness, pressure transducer, condensate drain trap, and several additional components to successfully complete the installation.

Replacement of the existing condensate trap assembly is REQUIRED with installation of this kit.

Table 1 – Kit Components

Kit Contents
Control Board
Control Board Bracket
Transducer
Model Plug(s)
Condensate Trap
Wire Harness
Service Label
Connection Diagram
Screws

ELECTROSTATIC DISCHARGE (ESD)

⚠ CAUTION

FURNACE RELIABILITY HAZARD

Failure to follow this caution may result in unit component damage.

Electrostatic discharge can affect electronic components. Take precautions during furnace installation and servicing to protect the furnace electronic control. Precautions will prevent electrostatic discharges from personnel and hand tools which are held during the procedure. These precautions will help to avoid exposing the control to electrostatic discharge by putting the furnace, the control, and the person at the same electrostatic potential.

Disconnect all power to the furnace. **DO NOT TOUCH THE CONTROL OR ANY WIRE CONNECTED TO THE CONTROL PRIOR TO DISCHARGING YOUR BODY'S ELECTROSTATIC CHARGE TO GROUND.**

Ground yourself by touching your hand and tools to clean, unpainted, metal surface of furnace close to control.

After touching chassis, you may proceed to service the furnace. You will recharge your body with static electricity by moving about or shuffling your feet. Reground yourself.

If you touch ungrounded objects (recharge your body with static electricity), reground yourself. Use this procedure for installed and uninstalled (ungrounded) furnaces.

Ground yourself again before handling a new control to protect control from damage. If control is to be installed in furnace, follow items 1 through 5 again before installing control. Put all used AND new controls into containers before touching ungrounded objects.

An ESD service kit (available from commercial sources) may also be used to prevent ESD damage.

INSTALLATION

⚠ CAUTION

FURNACE RELIABILITY HAZARD

Failure to follow this caution may result in improper furnaces operation or failure of furnace.

Note all wire connections prior to disconnection when servicing controls. Wiring errors can cause improper and dangerous operation

⚠ WARNING

FURNACE RELIABILITY HAZARD

Failure to follow this warning could result in personal injury, death and/or property damage.

Turn off the gas and electrical supplies to the furnace and install lockout tag before performing any maintenance or service. Follow the operating instructions on the label attached to the furnace.

Step 1 – Removal of existing components

NOTE: For plug locations, refer to existing wiring connection diagram located on furnace.

1. Turn thermostat to OFF or set temperature to the lowest setting.
2. Turn off electrical supply to furnace.
3. Turn off gas supply to furnace.
4. Remove burner and control access/blower door.
5. Disconnect thermostat wires from furnace control.
6. Remove HUM and EAC connections, (if equipped).
7. Disconnect the blower line voltage BL and Neutral and speed tap leads from the furnace control, making note of motor lead orientation being used for heating, cooling, and constant fan demands.
8. Remove primary and secondary transformer wire connections from the furnace control.
9. Disconnect Hot Surface Ignitor (HSI) connections from the existing harness at plug J14. Removal of the HSI from the burner assembly is NOT necessary.
10. Disconnect the Burner Thermal Switch from the main harness by unplugging the two-pin connector. Remove the two wire harness from the BTS switch. Removal of the burner thermal switch from the burner assembly is NOT necessary.
11. Remove the wire harness connection to the Flame sensor at connector J18. Removal of flame sensor from Burner assembly is NOT necessary.
12. Disconnect the existing harness from the inducer assembly at plugs J13 and J17
13. Disconnect the blue and green main harness connections at the gas valve.
14. Remove the manifold mounting screw containing the green grounding loop. Remove the ground loop connector and reinstall the burner manifold mounting screw.
15. Remove the pressure hose from the existing pressure transducer. Use snips to clip wire tie securing transducer into mounting bracket. The existing pressure transducer will be replaced with one contained in the kit, so removal from the harness is not necessary.
16. Unplug the two leads of the condensate float switch from the main wire harness.
17. Remove the two red wires from the main limit switch.
18. Remove the junction box cover, and disconnect the L1 and L2 connection from the incoming electrical supply.
19. Remove wire strain relief by squeezing head of plastic wire tie and lifting the wire, or by using diagonal cutters to snip and remove the top of the wire tie.
20. Remove the blower door switch mounting screw. Remove the blower door switch from its mounting location. Carefully remove the wire connections from the switch and set switch aside for use during reassembly.
21. Remove the furnace control and complete wiring harness from the furnace, including existing pressure transducer, taking note of wire harness routing. New wiring harness routing will be similar.

22. Remove the furnace control mounting bracket from the blower housing making special note of the location and length of the screws. Retain the mounting screws for use with the replacement furnace control bracket included in this kit.
23. Remove transformer assembly from furnace control mounting bracket and retain screws for reuse.
24. Remove the plastic wire retainer clip from the control mounting bracket for reuse on the new bracket.

Step 2 — Installing the New Components

1. Install the transformer assembly onto the new furnace control bracket from the kit using the screws removed previously.
2. Install the new furnace control mounting bracket onto the blower housing using the mounting screws from the previously removed control mounting bracket.
3. Install the new furnace control onto the furnace control mounting bracket using the screws provided in the kit.
4. Install the plastic wire retainer clip onto the new control mounting bracket.
5. Route new wiring harness into furnace.
   a. Assuring the long 11-pin connector of the harness is oriented toward the blower compartment, place the molded harness grommet into the groove at the blower door switch mounting location.
   b. Route burner compartment section of wire harness in the same orientation as the previously removed harness.
6. Install the blower door switch.
   a. Locate the two black wires with female flag terminals near the blower door switch mounting location. Attach these two terminals to the previously removed door switch.
   b. Install the blower door switch using the previously removed screw.
7. Install the door bracket flange using screws previously removed.

Make harness connections in burner compartment

1. Route the black L1 and white L2 wires into the junction box, and reconnect them to the incoming electrical supply. Reinstall the junction box cover.
2. Press the strain relief wire tie into the hole in junction box.
3. Connect the main limit switch 2 pin connector to the main harness PL17 connection containing the red/yellow and red wires.
4. Remove the burner manifold mounting screw that previously held the grounding loop. Locate the green/yellow ground wire and attach the ground loop connector by reinstalling the burner manifold mounting screw.
5. Locate and connect the blue and green wires in the main harness to the gas valve.
6. Connect the inducer assembly to the main harness inducer line voltage plug at PL11.
7. Connect the inducer assembly to the main harness inducer speed signal plug at PL13.
8. Connect the flame sensor to the main harness at PL18 by locating the white wire with the single pin connector, and connecting to the Flame sensor connector.
9. Connect the two wire harness supplied in the kit to the BTS switch. Connect the Burner Thermal switch to the main harness by plugging in the two-pin connector PL19 from the Burner Thermal Switch to the 2 pin connector of the main harness containing the orange and yellow wires.
10. Connect the Hot surface Ignitor (HSI) by locating the 2 pin connector containing black and white wires, and connecting it to the HSI at PL14.
11. Install the transducer from the kit into the existing bracket, and secure using the wire tie provided. Attach the pressure hose to the new transducer and plug the 3 pin connector (black, gray, red) PL12 from the harness into the new pressure transducer harness.

Make harness connection in Blower compartment

1. Attach the flat 11-pin main connector to PL1 of the furnace control.
2. Locate and attach the 2-pin IND/HSI connector (black, black) to PL2 of the furnace control.
3. Locate and attach the 3-pin transducer connector (red, gray, black) to PL3 of the furnace control.
4. Connect the transformer to the new furnace control.
   a. Red wire to SEC- 1 terminal. SEC- 1 terminal is located adjacent to the 3 amp fuse.
   b. Blue wire to SEC- 2 terminal. SEC- 2 terminal is located adjacent to the 3 amp fuse.
   c. Black wire to PR terminal.
   d. White wire to one of the 115- volt Neutral-L2 spade connections.
5. Locate the black wire with female spade connector and attach to L1 of the new furnace control.
6. Locate three remaining white leads with female spade connections, and attach them to Neutral-L2 spade connections.
7. Connect the blower to the furnace control.
   a. Attach the black blower line voltage lead to the BL spade connector of the furnace control.
   b. Connect the white blower neutral lead to a Neutral-L2 spade connector on the furnace control.
   c. Connect the green speed tap lead to the COM terminal of the furnace control.
   d. Connect the remaining speed tap leads to the appropriate 24V motor tap connections based on the previously noted locations for heating, cooling, and constant fan demands.
8. Reattach HUM and EAC connections, (if originally equipped).

NOTE: This replacement control offers both a 24VAC and a 115VAC output for use with humidifiers. Check humidifier solenoid voltage requirements and assure that humidifier solenoid is connected to the proper output terminal.

9. Dress excess wire harness length in retainer clip on control bracket.
10. Set the blower off delay. Blower Off Delay Jumper Select is located near the thermostat connection terminal. It is factory set at 120 seconds.
11. Install model plug, based on unit model size.

Table 2 – Model Plugs

Input BTU/h	Model Plug		
	59SU5A 935CA PG95ESUA	WFSU (A1) R95ESN (A1)	N95ESU (A1) R95ESU (A1)
60K	HK70EZ034	1188024 (HK70EZ034)	1191649 (HK70EZ050)
80K	HK70EZ036	1188025 (HK70EZ036)	1191650 (HK70EZ052)
100K	HK70EZ037	1191648 (HK70EZ037)	1191651 (HK70EZ053)

12. Remove existing door booklet and replace with the new booklet included with the kit.
13. Do not connect thermostat wires to control board until Start- up and System Check- out is complete.

Install New Condensate Trap

Replacement of the existing condensate trap is REQUIRED with installation of this kit.

1. Disassemble existing field drain piping from condensate trap assembly.

2. Remove condensate trap connections from collector box, and remove existing condensate trap assembly.

The condensate trap is a field installed trap. A bag of loose parts needed to install the trap is provided with this kit. How to install the trap is shown in the Installation section of this manual. Only use the trap provided with this kit.

⚠ WARNING

CARBON MONOXIDE POISONING AND PROPERTY DAMAGE HAZARD

Failure to follow this warning could result in property damage, personal injury or death.

The condensate trap provided with this kit must be installed per the furnace installation instructions. Do not modify the trap or substitute a different trap.

⚠ NOTICE

The condensate trap extends below the underside of the casing in the horizontal position. A minimum of 6⅜-in. of physical clearance is required and 1-in. of additional clearance is recommended between the casing side and the furnace platform for the trap to extend out of the casing in the horizontal position. Allow at least 1/4-in. per foot of slope down.

Condensate Drain Connection

⚠ CAUTION

FROZEN AND BURST WATER PIPE HAZARD

Failure to protect against the risk of freezing may result in property damage.

Special precautions MUST be made if installing furnace in an area which may drop below freezing. This can cause improper operation or damage to equipment. If furnace environment has the potential of freezing, the drain trap and drain line must be protected. The use of accessory electric heat tape and/or RV antifreeze is required for these installations.

⚠ CAUTION

PROPERTY DAMAGE HAZARD

Failure to follow this caution may result in burst water pipes and/or property damage.

If a condensate pump is installed, a plugged condensate drain or a failed pump may cause the furnace to shut down. Do not leave the home unattended during freezing weather without turning off water supply and draining water pipes or otherwise protecting against the risk of frozen pipes.

DO NOT trap condensate water in the drain line in any other location than at the condensate drain trap supplied with the furnace. If possible, DO NOT route the drain line where it may freeze. The drain line must terminate at an inside drain to prevent freezing of the condensate and possible property damage.

Special precautions MUST be made if installing furnace in an area which may drop below 32° F (0°C). This can cause improper operation or damage to the equipment. If the furnace environment has the potential of freezing, the drain trap and drain line must be protected. In areas where the temperature may be below 32° F (0° C), a Condensate Freeze Protection heat tape kit is strongly recommended. Refer to the Accessory section of the Product DataSpecification for current kit number. A self-regulating, shielded and waterproof heat tape rated at 3 to 6 watt per foot (10 to 20 watt per meter) at 115 volt, 40°F (4°C) may be used to provide freeze protection of the remaining condensate drain line. Wrap the drain trap and drain line with the heat tape and secure with appropriate plastic ties. Follow the heat tape manufacturer's recommendations. Prime the trap before furnace operation.

The condensate drain line must be supported and/or secured per local codes. Supports and clamps should be spaced to prevent the drain line from sagging or being dislocated from the furnace or termination point. In the absence of local codes, consult the current edition of the National Standard Plumbing Code, in the U.S.

An indoor coil condensate drain or humidifier drain can be connected to the external furnace condensate drain provided:

a. The drains are not hard piped together, and
b. There is an air gap at the point where the two drain lines meet or
c. All condensate piping is at least 3/4" PVC and there is a relief tee at the top of condensate drain piping as shown , see Fig. 2.

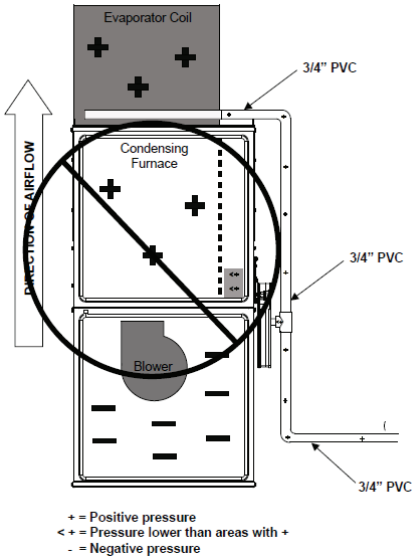

A200069

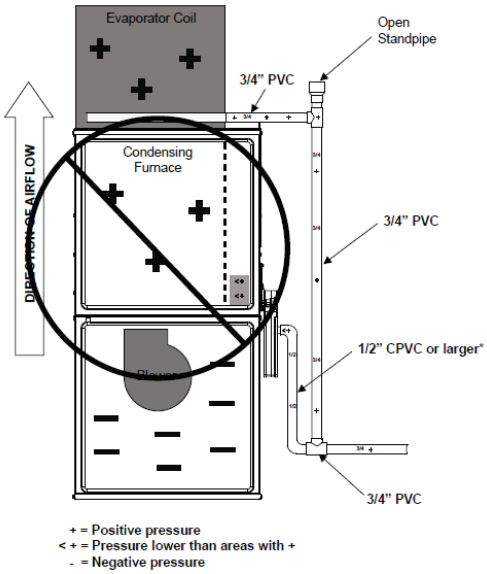

A200070

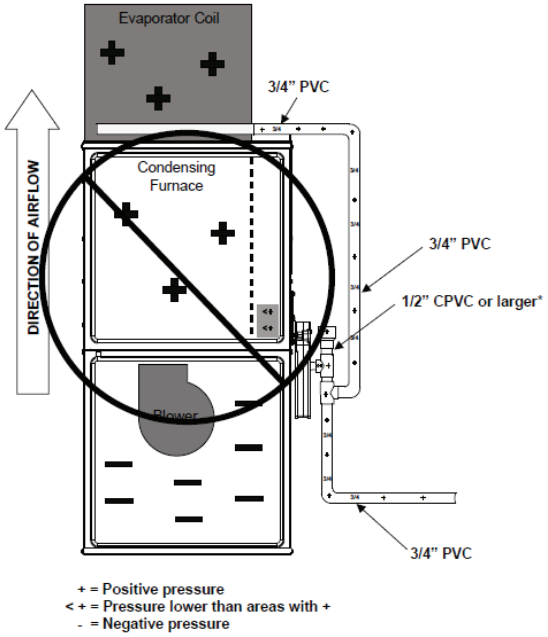

A200071

Fig. 1 – Fig. 1 - Example of Field Drain Attachment (Not Allowed)

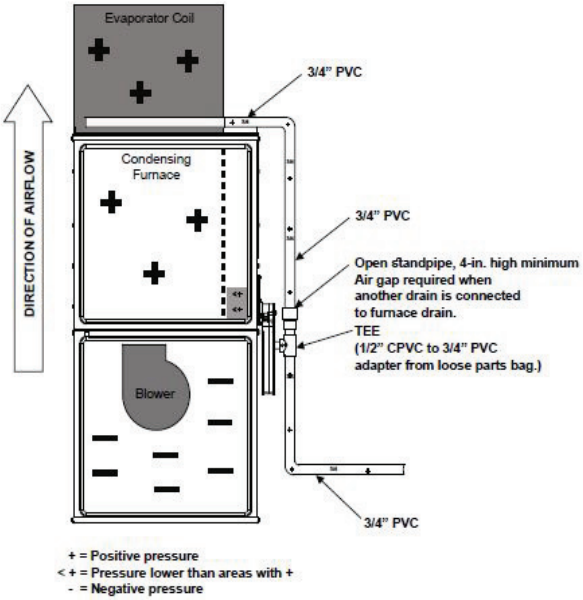

A200072

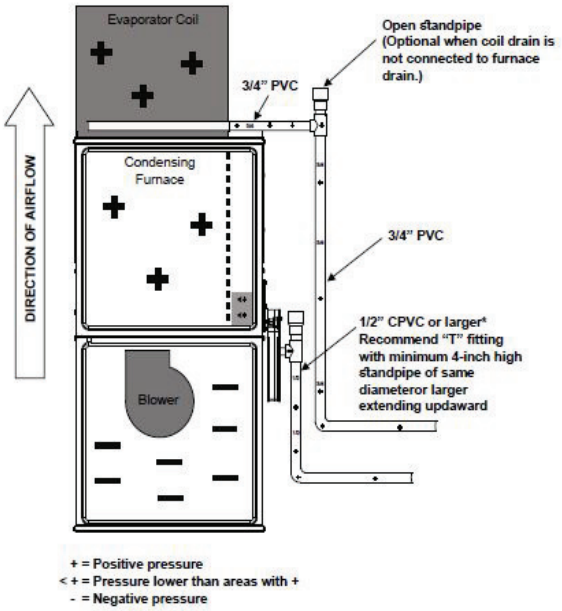

A200073

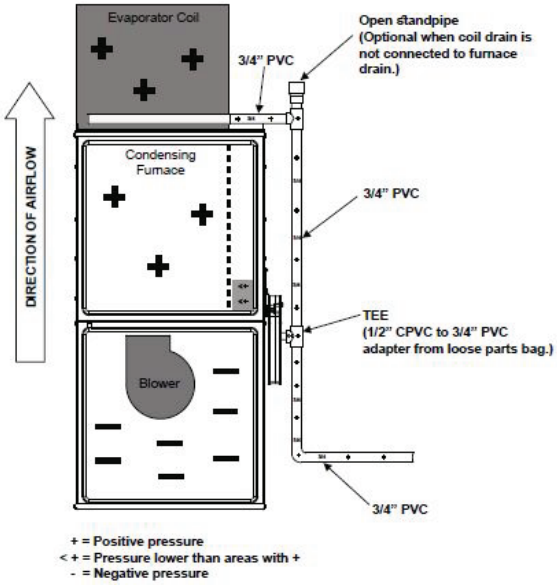

A200074

Fig. 2 – Example of Field Drain Attachment

Table 3 – Condensate Trap Configurations

Part	Installation Configuration		
	Horizontal	Upflow	Upflow Offset
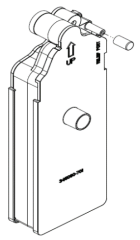 A200090 Main Trap	Required	Required	Required
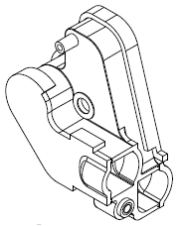 A200091 Adapter	Not Required	Required	Required
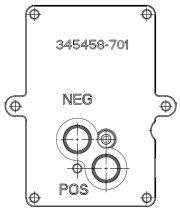 A200092 Plate	Not Required	Required	Required
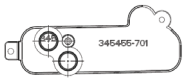 A200093 Offset Adapter	Not Required	Not Required	Required (accessory kit purchased separately)

NOTICE

Upflow installations utilizing the right side air return opening should follow the Upflow Specific Steps - Offset Installation to ensure the full opening is available for return ductwork.

INSTALLATION

Preparing the Furnace – Before Setting in Place

1. Check that all pre-installed gaskets on trap components are present, adhered, and undamaged.
2. Install supplied trap gasket on collector box.

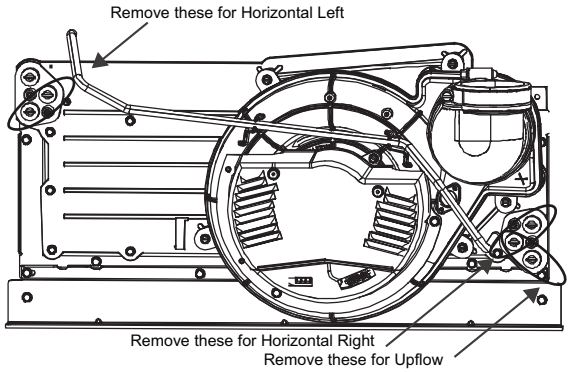

A200075

Fig. 3 – Drain Plugs

WARNING

CARBON MONOXIDE POISONING HAZARD

Failure to follow this warning could result in property damage, personal injury or death.

Missing or damaged gaskets on trap components may result in flue gas leakage and water leakage.

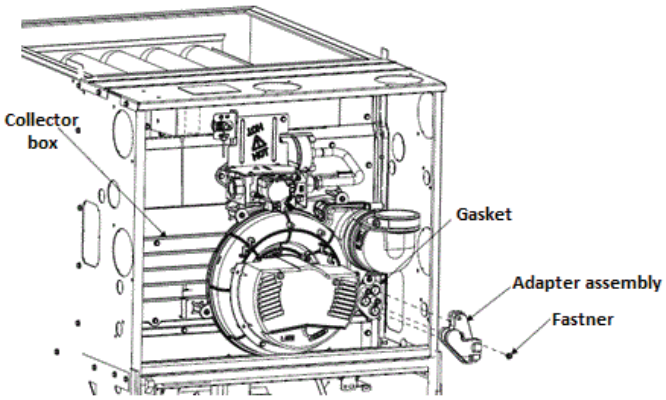

A200076

Fig. 4 – Upflow Example of Trap Adapter Installation

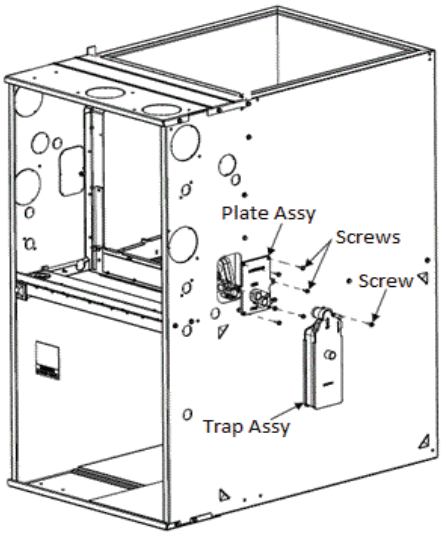

A200064

Fig. 5 – Upflow Condensate Drain

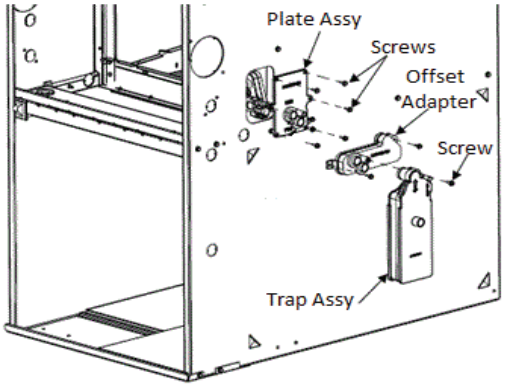

A200065

Fig. 6 – Upflow - Offset of Condensate Drain

NOTICE

Upflow installations utilizing the right side air return opening should follow the Upflow Specific Steps - Offset Installation to ensure the full opening is available for return ductwork.

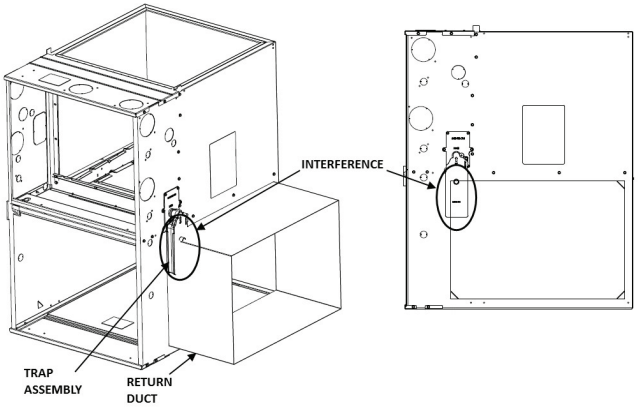

A200119

Fig. 7 – Upflow Right Side Return Configuration - Trap Interference

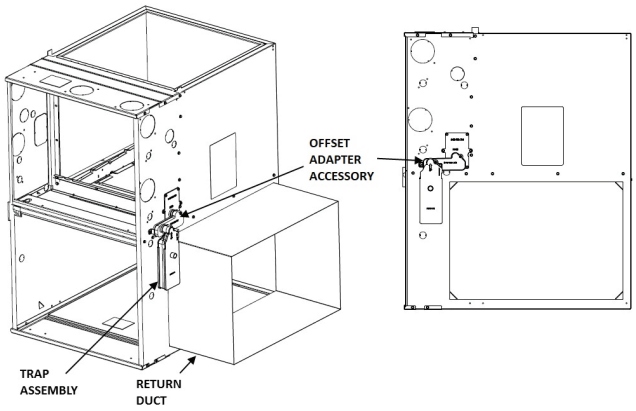

A200120

Fig. 8 – Upflow Right Side Return Configuration - Required Upflow Offset Installation

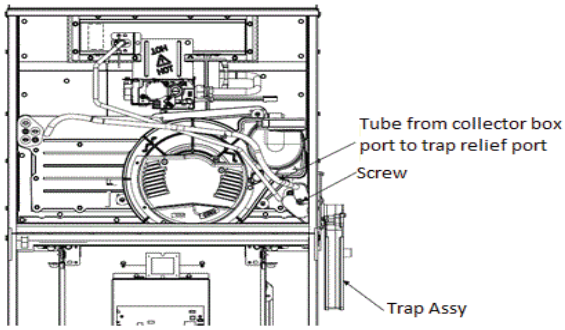

A200077

Fig. 9 – Example of Tube Connection

Upflow Specific Steps – Standard Installation

1. Install trap adapter to the collector box using provided machine screw, see Fig. 4.
2. Screw the adapter plate to the trap adapter using provided machine screw, see Fig. 5.
3. Screw the adapter plate to the side of casing using six (6) of the provided sheet metal screws, see Fig. 5. Drilling pilot holes is recommended to better align the plate with the knockout opening.
4. Screw the trap to the adapter plate using provided machine screw, see Fig. 5.
5. Remove factory-installed collector box cap. Run tube from port on upper left of the collector box to the relief port on the trap adapter, see Fig. 9. If the tube is too long, cut any extra length from the tube.

Upflow Specific Steps – Offset Installation

1. Trap Offset Adapter Accessory Kit (purchased separately) is required. Instead of installing the trap to the adapter plate, screw the trap offset adapter to the adapter plate, see Fig. 6.
2. Screw the trap to the trap offset adapter, see Fig. 6.
3. Screw the trap adapter plate to the casing using the supplied sheet metal screw, see Fig. 6.
4. Remove factory-installed collector box cap. Run tube from port on upper left of the collector box to the relief port on the trap adapter, see Fig. 9. If the tube is too long, cut any extra length from the tube.

Horizontal Specific Steps

1. Accessory Horizontal Installation Kit (trap grommet) is required for all direct-vent horizontal installations (only). The kit contains a rubber casing grommet designed to seal between the furnace casing and the condensate trap, see Fig. 10.

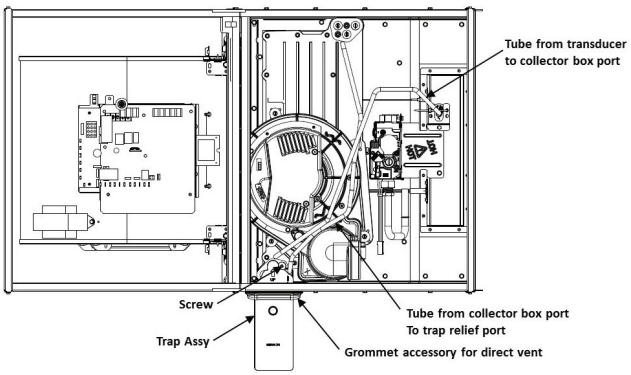

A200067

Fig. 10 – Horizontal Right - Trap Assembly Aid

2. Install the grommet in the casing when required for direct-vent horizontal applications.
3. Allow for 6-3/8” (162 mm) of clearance underneath the furnace for the condensate trap and drain line. It is recommended to leave an additional 1” clearance under the trap for service, see Fig. 11.

4. Remove appropriate collector box drain plug, see Fig. 3.
5. Attach trap to collector box using provided machine screw, see Fig. 10.
6. For horizontal right side down:
   a. Remove factory-installed collector box cap.
   b. Remove the factory-installed cap from the relief port on the trap and run tube from port on the collector box corner opposite of the trap to the relief port on the trap, see Fig. 10. If the tube is too long, cut any extra length from the tube. In the installed position, the transducer tubing should be in the lower pressure port and the relief tubing should be in the higher port.

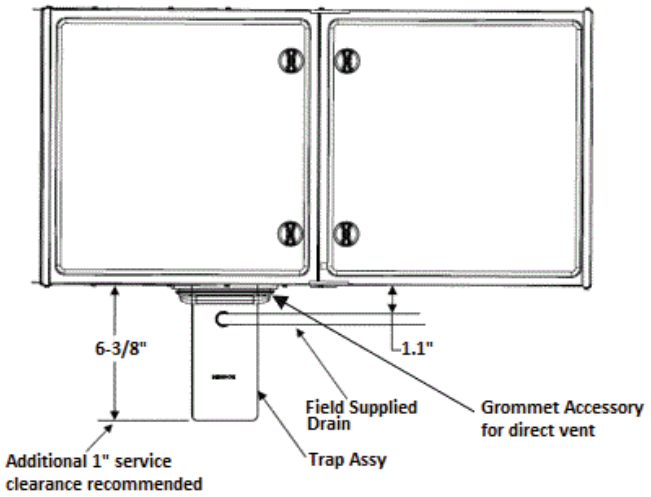

A200066

Fig. 11 – Trap Clearance in Horizontal Application (Note: Drain line can be run horizontally or vertically)

NOTE: Field Supplied Drain can be routed horizontally from the trap, allow at least 1/4-in. per foot of slope down.

NOTICE

Extra water in transducer pressure tubing may inhibit furnace operation because of incorrect pressure readings.

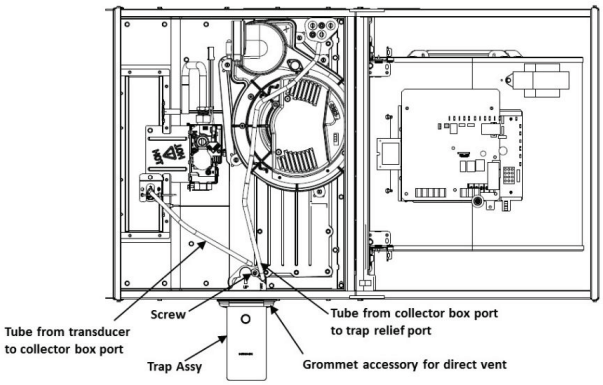

A200125

Fig. 12 – Horizontal Left - Trap Assembly Aid

7. For horizontal left side down:
   a. Remove factory-installed collector box cap.
   b. Remove the factory-installed cap from the relief port on the trap and run tube from port on the collector box corner opposite of the trap to the relief port on the trap, see Fig. 12. This will require removing the transducer pressure tubing from the factory-installed position. If the tube is too long, cut any extra length from the tube.
   c. Install transducer pressure tubing on the collector box port closest to the trap where the factory-installed collector box cap was installed, see Fig. 12. Trim transducer pressure tubing length ensuring no traps of loops for extra water collections. In the installed position, the transducer tubing should be in the lower pressure port and the relief tubing should be in the higher port.

It is permissible to run the trap up to 5 ft. away from the furnace to an area with the required trap clearance provided the following steps and conditions are followed.

Alternate Horizontal Option - Remote Trap Installation Specific Steps

1. The trap can be installed using a second adapter plate purchased separately.
   Install trap adapter to the collector box using provided machine scre, see Fig. 4.
2. Screw the adapter plate to the side of casing using six (6) of the provided sheet metal screw, see Fig. 5.
3. Screw the adapter plate to the trap adapter using provided machine screw, see Fig. 13. Drilling pilot holes is recommended to better align the plate with the knockout opening.
4. Install the second trap plate at the remote location, 5 ft. or less away from the furnace, see Fig. 13.
5. Using two field supplied 1/2-in. CPVC tubes of the desired length (5 ft. or less) and 2 field supplied CPVC elbows, run the drain from the adapter plate on the furnace to the remote adapter plate, see Fig. 13.
6. Screw the trap to the adapter plate using provided machine screw, see Fig. 13. Ensure trap is firmly secured and supported.
7. Follow steps 6. and 7. in the above section, Horizontal Specific Steps, for the proper routing of pressure tubing depending on furnace orientation. Substitute the relief port on the trap adapter for the relief port on the trap in remote trap installations. The factory-installed cap over the relief port on the trap should remain in place. Tubing should remain inside the furnace.

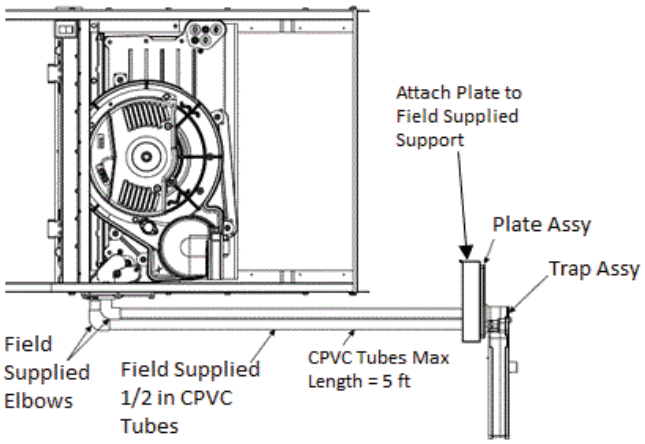

A200068

Fig. 13 – Alternate Horizontal Option - Remote Trap

Condensate Drain Connection

1. Use of the condensate drain elbow in the loose parts bag is required to make a connection to the field supplied drain.
2. Remove the pre-formed rubber drain elbow, and two spring clamps from the loose parts bag.
3. Connect the full elbow to the outlet of the condensate trap with one spring clamp. Avoid misalignment of the drain pipe which may cause kinks in the elbow or grommet, see Fig. 14.
4. The remaining drain line can be constructed from field- supplied 1/2-in. CPVC or 3/4-in. PVC pipe, in compliance with local building codes. A factory-supplied 1/2-in. CPVC to 3/4-in. PVC adapter is supplied in the loose parts bag for use as required.

5. Install the adapter or connect the 1/2-in. CPVC pipe by sliding a spring clamp over the open end of the elbow or grommet on the outside the furnace casing.
6. Open the spring clamp and insert the long end of the adapter or the 1/2-in. CPVC pipe into the outlet stub on the drain tube, see Fig. 14.
7. Connect additional condensate piping to a code-approved drain, or to a condensate pump approved for use with acidic furnace condensate and compatible with mineral and vegetable oils, such as canola oil.
8. Allow at least 1/4-in. per foot (20 mm per meter) of slope down and away from the furnace in horizontal sections of drain line.

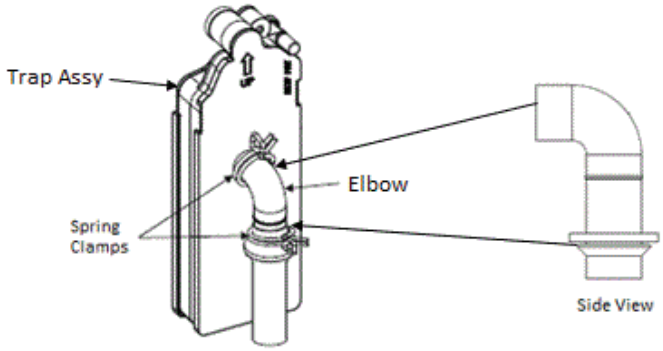

A200094

Fig. 14 – Condensate Drain Connection

⚠ CAUTION

UNIT OPERATION HAZARD

Failure to follow this caution may result in intermittent unit operation or performance satisfaction.

Condensate trap must be PRIMED or proper draining may not occur. The condensate trap has two internal chambers which can ONLY be primed by pouring water into the inducer drain side of condensate trap.

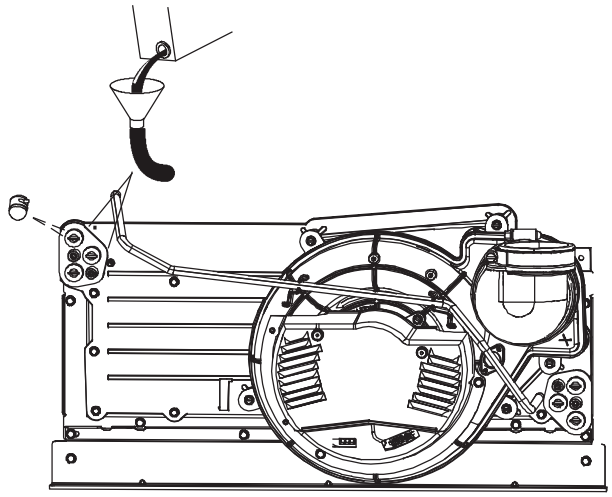

A190304

Fig. 15 – Priming Condensate trap

1. Remove upper and middle collector box drain plugs opposite of the condensate trap.
2. Connect Field-supplied 5/8-in (16mm) ID tubing with attached funnel to upper collector box drain connection.
3. Pour one quart (liter) of water into funnel/tube. Water should run through collector box, overfill condensate trap, and flow into open field drain.
4. Remove funnel/tubing and replace collector box drain plug.
5. Connect Field-supplied 5/8-in (16mm) ID tubing with attached funnel to middle collector box drain connection.
6. Pour one quart (liter) of water into funnel/tube. Water should run through collector box, overfill condensate trap, and flow into open field drain.
7. Remove funnel/tubing and replace collector box drain plug.

SYSTEM CHECK- OUT

Step 1 — Component Self-Test

1. To initiate component test sequence, ensure thermostat is turned OFF or thermostat wires are disconnected. Turn incoming power on and manually close blower door switch. With a short piece of wire, briefly short TEST/TWIN terminal to Common/24V terminal.

Component test sequence is as follows:

a. Status LED will flash 4 times then turn ON inducer motor.
b. Inducer motor will run for entire component test.
c. Hot surface igniter will be turned ON for 15 seconds, then OFF.
d. Blower motor-HEAT speed will be turned ON for 10 seconds.
e. Blower motor- COOL speed will be turned ON for 10 seconds.

2. Repair, replace or service any component that does not work properly during the self- test. The gas valve and humidifier are not energized during self- test.
3. Turn off electrical supply to furnace.
4. Release blower door switch.
5. Connect thermostat wires.
6. Install blower and control access doors.
7. Turn power back on.
8. Turn on gas supply to furnace.

Step 3 — System Operation

1. Perform any other safety checks as deemed necessary (flame safety, limit switch, vent system etc.).
2. Run unit through one complete call for heat cycle.

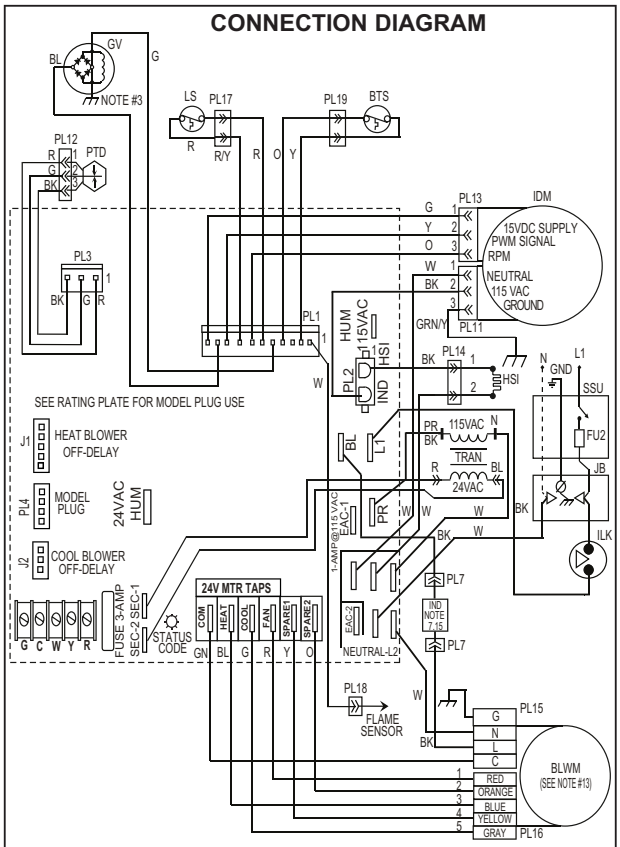

NOTES:

BL	L1 BLOWER POWER	PL4	MODEL PLUG CONNECTOR
BLWM	BLOWER MOTOR (ECM)	P5	5-CIRCUIT TERMINAL BLOCK
BTS	BURNER THERMAL SWITCH	PL7, PL18	1-CIRCUIT CONNECTOR
CPU	MICROPROCESSOR AND CIRCUITRY	PL11,12,13	3-CIRCUIT CONNECTOR
EAC	ELECTRONIC AIR CLEANER CONNECTION	P14,17,19	2-CIRCUIT CONNECTOR
FU2	FUSE OR CIRCUIT BREAKER CURRENT INTERRUPT DEVICE (FIELD INSTALLED & SUPPLIED)	PL15	4-CIRCUIT BLWM POWER CONNECTOR
FS	FLAME SENSOR	PL16	5-CIRCUIT BLWM SPEED TAP CONNECTOR
GND	EQUIPMENT GROUND	PCB	PRINTED CIRCUIT BOARD CONTROL
GV	GAS VALVE-REDUNDANT	PTD	PRESSURE TRANSDUCER
GVR	GAS VALVE RELAY, DPST-(N.O.)	PR	TRANSFORMER 115V
HSI	HOT SURFACE IGNITER (115 VAC)	SSU	SAFETY SWITCH (FIELD SUPPLIED)
HSIR	HOT SURFACE IGNITER RELAY, SPST-(N.O.)		JUNCTION
24 VAC HUM	24VAC HUMIDIFIER CONNECTION		UNMARKED TERMINAL
HUM 115VAC	115VAC HUMIDIFIER CONNECTION		PCB CONTROL TERMINAL
IDM	INDUCED DRAFT MOTOR, ECM		FACTORY WIRING (115VAC)
ILK	BLOWER ACCESS PANEL INTERLOCK SWITCH, SPST-(N.O.)		FACTORY WIRING (24VAC)
JB	JUNCTION BOX		FIELD WIRING (115VAC)
J1	HEAT OFF DELAY JUMPER		FIELD WIRING (24VAC)
J2	COOL OFF DELAY JUMPER		CONDUCTOR ON CONTROL PCB
LS	LIMIT SWITCH, AUTO-RESET, SPST (N.C.)		FIELD WIRING SCREW TERMINAL
LED	LIGHT-EMITTING DIODE FOR STATUS CODES-AMBER		FIELD EARTH GROUND
			EQUIPMENT GROUND
			FIELD SPLICE
PL1	11-CIRCUIT CONNECTOR		PLUG RECEPTACLE
PL2	INDUCER / IGNITER CONNECTOR		
PL3	TRANSDUCER CONNECTOR		

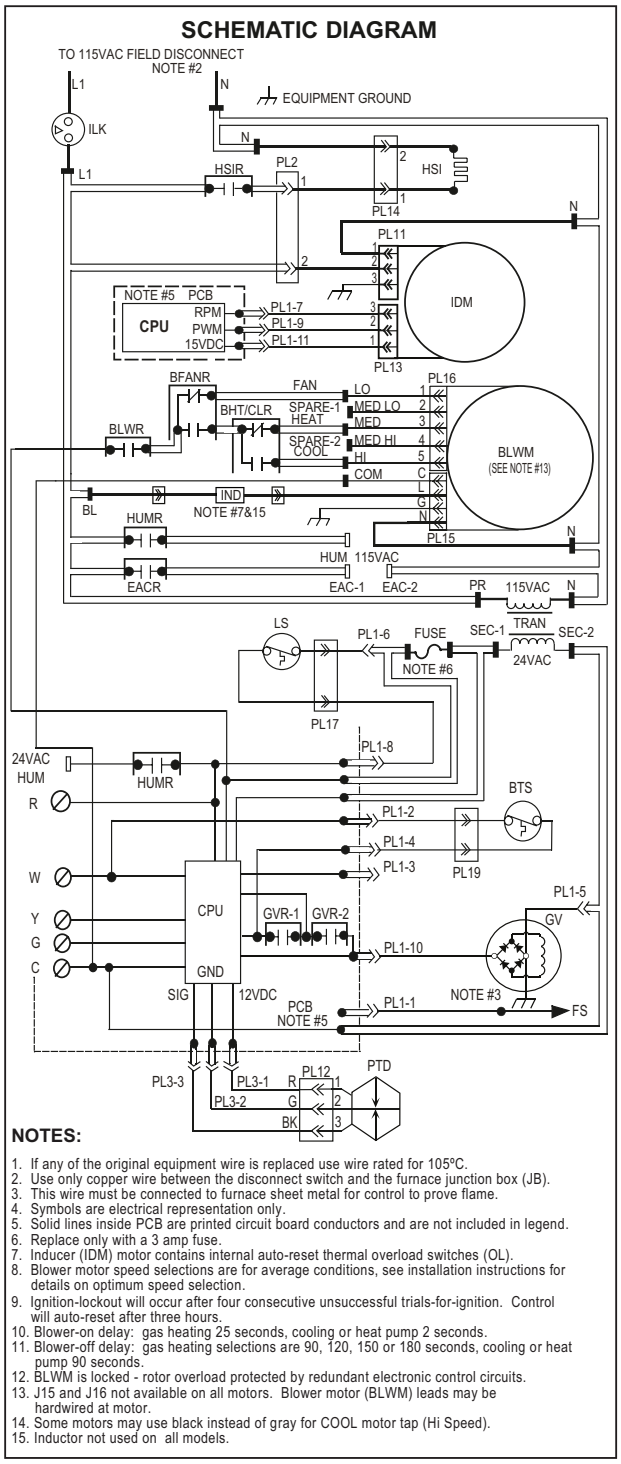

NOTES:

1. If any of the original equipment wire is replaced use wire rated for 105ºC.
2. Use only copper wire between the disconnect switch and the furnace junction box (JB).
3. This wire must be connected to furnace sheet metal for control to prove flame.
4. Symbols are electrical representation only.
5. Solid lines inside PCB are printed circuit board conductors and are not included in legend.
6. Replace only with a 3 amp fuse.
7. Inducer (IDM) motor contains internal auto-reset thermal overload switches (OL).
8. Blower motor speed selections are for average conditions, see installation instructions for details on optimum speed selection.
9. Ignition-lockout will occur after four consecutive unsuccessful trials-for-ignition. Control will auto-reset after three hours.
10. Blower-on delay: gas heating 25 seconds, cooling or heat pump 2 seconds.
11. Blower-off delay: gas heating selections are 90, 120, 150 or 180 seconds, cooling or heat pump 90 seconds.
12. BLWM is locked - rotor overload protected by redundant electronic control circuits.
13. J15 and J16 not available on all motors. Blower motor (BLWM) leads may be hardwired at motor.
14. Some motors may use black instead of gray for COOL motor tap (Hi Speed).
15. Inductor not used on all models.

A200237

Fig. 16 – Connection Diagram

©2020 Carrier. All rights reserved.