ENGINEERING TOMORROW

Data sheet

Sight glass (Low pressure)
Types SG, SGI, SGN, SGR, SGRI and SGRN



SG is sight glasses for low pressure application (Max Working Pressure 500 psig).
SG is available with flare, solder and socket connections, and with and without moisture indicators.
SG and SGR, without moisture indicator, are mainly used to indicate the condition of the refrigerant in the liquid line or the flow in the oil return line from the oil separator.
SGI / SGN and SGRI / SGRN are equipped with sensitive indicators that reflects a color, which depends on the moisture content in the refrigerant.

Features

- Provides fast and easy indication of:
  - High system moisture content
  - Lack of subcooling or low system charge
  - Liquid level in receiver (vessel mount versions only)
- Oil level in compressor (vessel mount versions only)
- Two Indicator types:
  - Type "I" – provides optimal moisture indication for refrigerants with mineral oil, e.g. R22
  - Type "N" – provides optimal moisture indication for refrigerants: R22, R134a, R404A, R407C, R507, R407A, R407F, R448A, R449A, R450A, R452A, R513A
- All indicators are dirt resistant
- Available in both inline and vessel mount versions
- Hermetically sealed, tempered glass for easy viewing
- Available in flare / flare, solder / solder connection or socket type

© Danfoss | DCS (jmn) | 2018.06

Approvals

Technical data

Media temperature	-58 – 175 °F
Maximum working pressure	PS / MWP = 500 psig
Refrigerant oil	All mineral oils and ester oils

Selection

Prior to selecting a sightglass with moisture indicator, the following should be considered:

- Type of refrigerant
- Water solubility of refrigerant
- The level at which a danger signal is required to prevent the formation of harmful acids

The following tables indicate moisture content levels at which the sightglass indicator will register a dry or wet system for various refrigerants.
The values under "*green / dry*" are to be taken as the maximum permissible moisture content for the system. When the green color begins to fade indicating an increase in moisture levels, the sightglass should be checked more frequently.
If the moisture levels increase enough to change the indicator to "*yellow*" indicating a wet system, the filter drier must be changed immediately.

Note: when storing, transporting or installing the Sight Glass, avoid the chemical indicator to get in contact with non-refrigerant medium or fluid (like water, oil, ect.)

SGI / SGRI for refrigerants with mineral oil

	Moisture content ppm = parts per million					
	SGI / SGRI					
	Media temperature 77 °F			Media temperature 110 °F		
	Green / dry	Intermed. color	Yellow / wet	Green / dry	Intermed. color	Yellow / wet
Refrigerants with mineral oil, e.g. R22	< 150	150 – 300	> 300	< 250	250 – 500	> 500

SGN / SGRN for R22, R134a, R404A, R407C, R507, R407A, R407F, R448A, R449A, R450A, R452A, R513A

	Moisture content ppm = parts per million					
	SGN / SGRN					
	Media temperature 77 °F			Media temperature 110 °F		
	Green / dry	Intermed. color	Yellow / wet	Green / dry	Intermed. color	Yellow / wet
R22	< 30	30 – 120	> 120	< 50	50 – 200	> 200
R134a	< 30	30 – 100	> 100	< 45	45 – 170	> 170
R404A	< 20	20 – 70	> 70	< 25	25 – 100	> 100
R407C	< 30	30 – 140	> 140	< 60	60 – 225	> 225
R507	< 15	15 – 60	> 60	< 30	30 – 110	> 110
R407A	< 29	29 – 115	> 115	< 48	48 – 192	> 192
R407F	< 30	30 – 168	>168	< 60	60 – 240	> 240
R448A	< 28	28 – 110	> 110	< 70	70 – 227	> 227
R449A	< 29	29 – 105	> 105	< 53	53 – 200	> 200
R450A	< 23	23 – 148	> 148	< 46	46 – 245	> 245
R452A	< 20	20 – 79	> 79	< 30	30 – 143	> 143
R513A	< 22	22 – 75	> 75	< 22	22 – 123	> 123

Notes:
– For colours reflecting moisture values of other refrigerants, please contact Danfoss
– For a fully updated list of approved refrigerants, visit www.products.danfoss.com and search for individual code numbers, where refrigerants are listed as part of product specifications.

Ordering

SG without indicator

	Valve type	Connection type	Connection [in.]	Code no.
	SG 22s	Solder ODF x ODF	7/8	014-1207
	SGR	NPT	1/2	014-0002

SGI with I type indicator

	Valve type	Connection type	Connection [in.]	Code no.
	SGI 6	Flare int. x ext. [1]	1/4	014-0063
	SGI 10		3/8	014-0064
	SGI 6s	Solder ODF x ODF	1/4	014-0066
	SGI 10s	Solder ODF x ODF	3/8	014-0067
	SGI 12s	Solder ODF x ODF	1/2	014-0068
	SGI 16s	Solder ODF x ODF	5/8	014-0069
	SGI 22s	Solder ODF x ODF	7/8	014-0070
	SGRI	NPT	1/2	014-0131

[1]) Can be screwed directly onto the Danfoss filter drier

SGN with N type indicator

	Valve type	Connection type	Connection [in.]	Code no.
	SGN 6	Flare int. x ext.	1/4	014-0132
	SGN 10		3/8	014-0133
	SGN 6	Flare int. x ext. [1]	1/4	014-0137
	SGN 10		3/8	014-0138
	SGN 12		1/2	014-0139
	SGN 6s	Solder ODF x ODF	1/4	014-0142
	SGN 10s		3/8	014-0143
	SGN 12s		1/2	014-0144
	SGN 16s		5/8	014-0145
	SGN 22s		7/8	014-0147
	SGN 6s	Solder ODF x ODM	1/4	014-0151
	SGN 12s		5/16	014-0155
	SGRN	NPT	1/2	014-0006

[1]) Can be screwed directly onto the Danfoss filter drier

Note: for other connection SG codes, please contact Danfoss manufacture factory

Metric conversions
1 in. = 25.4 mm

Dimensions and weights

SGI, SGN flare, int. × ext.

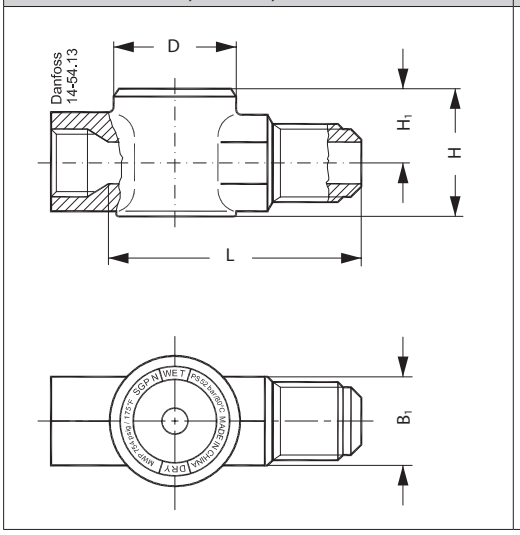

SGI, SGN flare, ext. × ext.

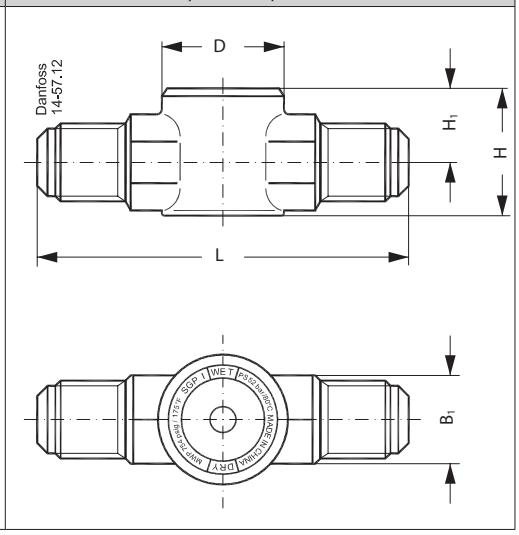

SGI, SGN solder ODF × ODF

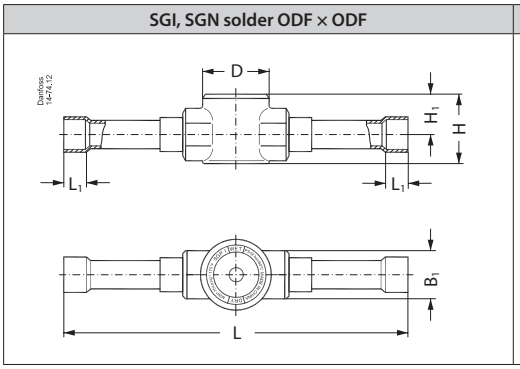

SGI, SGN solder ODF × ODM

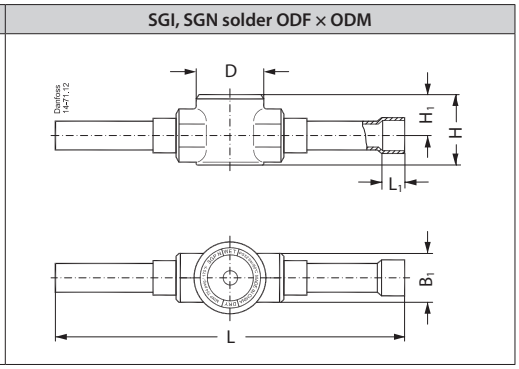

Type	Connection type	L	L_1	H	H_1	B_1	øD	Net weight
		[in.]	[in.]	[in.]	[in.]	[in.]	[in.]	[lbs]
SGI / SGN 6	Flare ext. × ext.	2.638	—	0.945	0.551	0.551	1.063	0.22
SGI / SGN 10		3.228	—	1.102	0.630	0.748	1.260	0.44
SGI / SGN 6	Flare int. × ext	1.811	—	0.945	0.551	0.630	1.063	0.22
SGI / SGN 10		2.244	—	1.181	0.669	0.866	1.260	1.260
SGI / SGN 12		2.323	—	1.181	1.181	0.945	1.260	0.66
SGI / SGN 6s	ODF × ODF solder	3.976	0.276	0.945	0.551	0.551	1.063	0.22
SGI / SGN 10s		4.685	0.354	0.945	0.551	0.551	1.063	0.22
SGI / SGN 12s		5.748	0.394	1.102	0.630	0.748	1.063	0.44
SGI / SGN 16s		5.748	0.472	1.181	0.709	0.866	1.063	0.44
SGI / SGN 22s		6.811	0.699	1.457	0.827	1.063	1.260	0.66
SGI / SGN 6s	ODF × ODM solder	3.976	0.276	0.945	0.551	0.551	1.063	0.22
SGI / SGN 12s		5.748	0.394	1.102	0.630	0.748	1.063	0.44

Metric conversions
1 in. = 25.4 mm
1 lb = 0.454 kg

Dimensions and weights
(continued)

SG socket

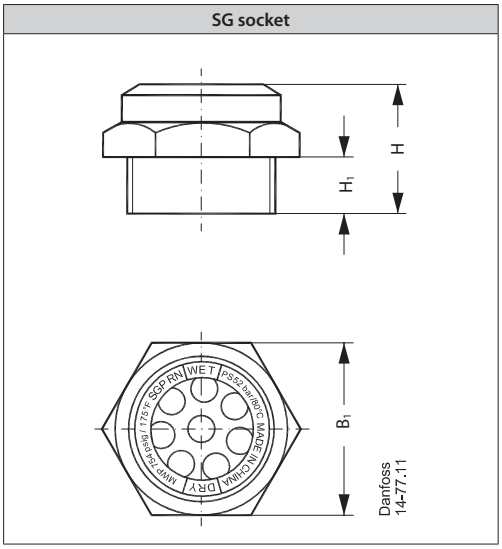

Type	Connection type	L	L_1	H	H_1	B_1	øD	Net weight
		[in.]	[in.]	[in.]	[in.]	[in.]	[in.]	[lbs]
SGR 1/2	NPT	–	–	1.181	0.709	1.063	–	0.22
SGRI / SGRN 1/2	NPT	–	–	1.181	0.709	1.063	–	0.22

Metric conversions
1 in. = 25.4 mm
1 lb = 0.454 kg

Danfoss can accept no responsibility for possible errors in catalogues, brochures and other printed material. Danfoss reserves the right to alter its products without notice. This also applies to products already on order provided that such alterations can be made without subsequential changes being necessary in specifications already agreed.
All trademarks in this material are property of the respective companies. Danfoss and the Danfoss logotype are trademarks of Danfoss A/S. All rights reserved.