Uncontrolled Copy

GENERAL INFORMATION:

SHAFT RUNOUT:	.001 [.03] T.I.R. PER INCH LENGTH OF EXTENSION
END PLAY:	.010 TO .063 [.25 TO 1.60]
BEARINGS:	SLEEVE
MOUNTING POSITION:	ALL ANGLE

ELECTRICAL DATA:

OVERLOAD PROTECTOR:	AUTOMATIC RESET (T.I. 7AM 304)
LINE LEADS:	NO. 18 GA., .06 [1.5] THK. XLP 125°C INSUL.
REVERSING LEADS:	NO. 18 GA., .03 [.8] THK. XLP 125°C INSUL.
GROUND LEAD:	NO. 18 GA., .03 [.8] THK. (GREEN) INSUL.

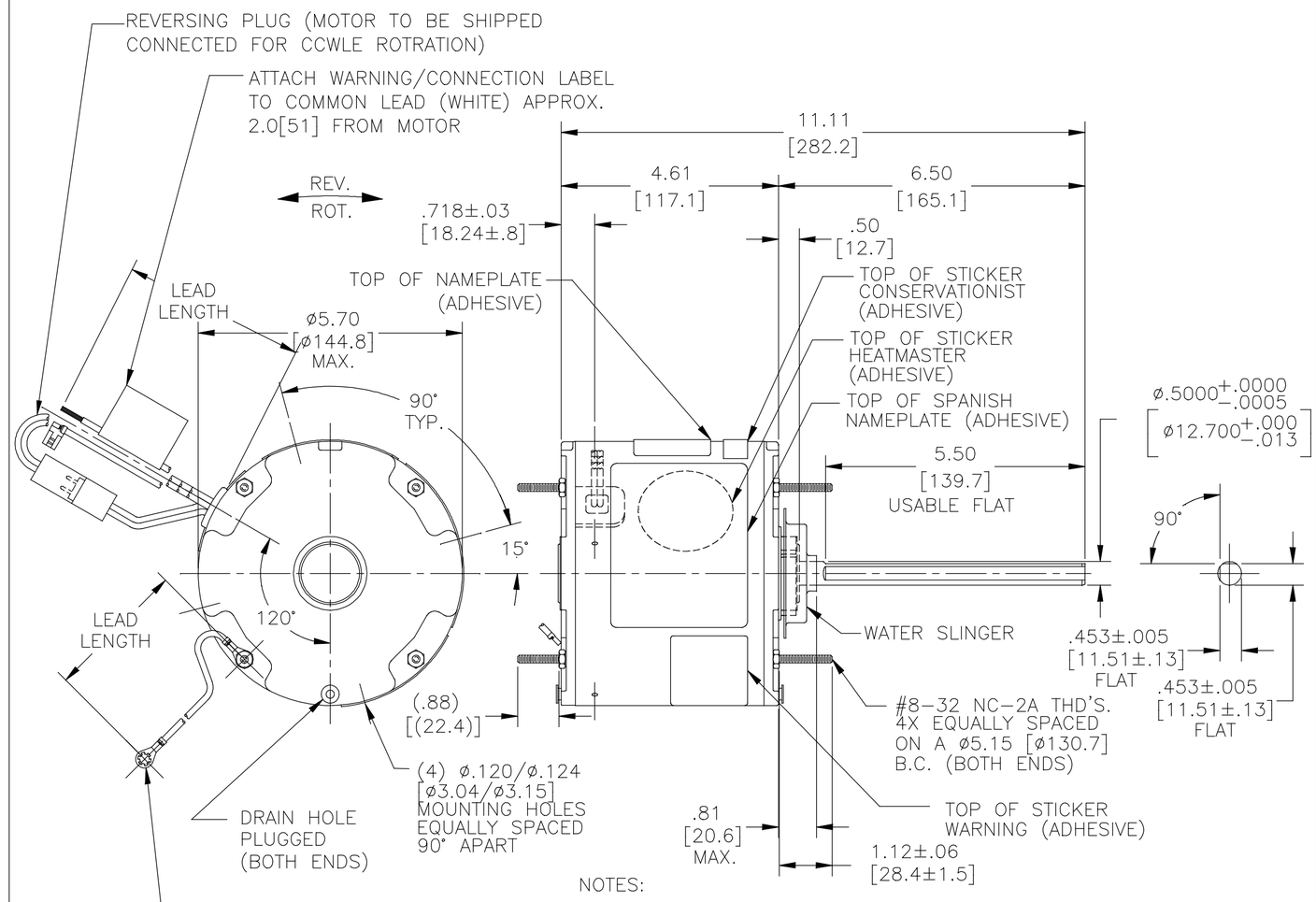

NOTES:

1. ATTACH INSTRUCTION SHEET 681572-003 ONTO SHAFT APPROX. 1.0[25] FROM WATER SLINGER(OR 69P9-3 ONLY USED IN MEXICO)
2. (4)SCREWS 615982-001 & (4) EXTRA HEX NUTS 7555A19H01 TO BE PUT IN A POLYBAG.
3. THE SYMBOL OF CTQ: ▲ (NO CTQ ON THIS DRAWING)
4. MEET THE REQUIREMENT OF ROHS AND REACH: SEE EP000014_5.1

NAMEPLATE DATA:

MODEL NO.: F48X85A01
CUST. P/N: FSE1028SF
HP: 1/4
ROT.: REVERSIBLE
RPM: 825
TYPE: UF
FRAME: 48
VOLTS: 208-230
PH: 1
AMPS: 1.5
HZ: 60
INS.: F
AMB.: 70°C
DUTY: AIR OVER
CAP.: 5 MFD/370 V
ENCL: ENCLOSED
UL LOGO
CSA LOGO
THERMALLY PROTECTED

EXTERNAL CONNECTION DIAGRAM

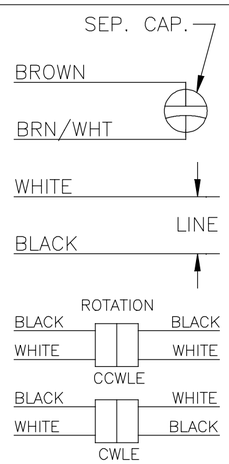

614131-242

PERFORMANCE CURVE NO.	TORQUE @825 RPM (25°C)	APPROVED SAMPLE	UL COMPONENT FILE #	UL COMPONENT CCN #	CSA FILE #	CSA CLASS #
C32578	26.8 OZ.-FT.	0601195A	E46412	PRGY2	LR43341	4211-01

GREEN (GROUND)	12.0/13.0 [305/330]	#10 EYELET
BLACK/WHITE	3.0/5.0 [76/127]	REVERSING PLUG
BROWN	48.0/51.0 [1219/1295]	.25 [6.4] FLAG
BROWN/WHITE	48.0/51.0 [1219/1295]	.25 [6.4] FLAG
WHITE	48.0/51.0 [1219/1295]	.50 [12.7] SKIN
BLACK	48.0/51.0 [1219/1295]	.50 [12.7] SKIN
COLOR	LENGTH	TERMINAL OR STRIP LENGTH

LEAD DATA

REGAL-BELOIT CORPORATION (RBC) PROVIDES TECHNICAL ASSISTANCE TO OUR CUSTOMERS IN SEVERAL AREAS. SINCE RBC DOES NOT RECEIVE ALL DATA CONCERNING THE USE AND APPLICATION OF THE MOTOR, THE SUITABILITY OF THE MOTOR FOR THE APPLICATION MUST BE DETERMINED BY THE CUSTOMER.

DIMENSIONS WITHOUT TOLERANCES ARE FOR REFERENCE ONLY.

MAIN FRAME - OLE	ENCLOSED
END FRAME - OLE	ENCLOSED
MAIN FRAME - LE	ENCLOSED
END FRAME - LE	ENCLOSED

ENCLOSURE

CUSTOMER	DISTRIBUTION SERVICE

DRAWING REVISION	REVISION BY	DATE
E	CADDIE.ZHOU	03-04-2020
ECO	APPROVED BY	DATE
ECO-0182191	KEYUN.GONG	03-04-2020

ECO DESCRIPTION
ADD SPANISH NAMEPLATE AND NOTES 3&4

COPYRIGHT REGAL BELOIT AMERICA, INC. ALL RIGHTS RESERVED.
PROPRIETARY AND CONFIDENTIAL INFORMATION - THIS DOCUMENT IS THE PROPERTY OF REGAL BELOIT AMERICA, INC. ("OWNER") AND CONTAINS OWNER'S PROPRIETARY INFORMATION. ANY PERSON, CORPORATION OR OTHER FIRM RECEIVING IT IS DEEMED, BY RECEIVING IT, TO AGREE THAT IT, AND/OR ANY PART OF IT, SHALL NOT BE DISCLOSED TO ANY PERSON, CORPORATION OR OTHER ENTITY, DUPLICATED, AND/OR USED, EXCEPT AS EXPRESSLY APPROVED IN WRITING IN ADVANCE BY OWNER. THIS DOCUMENT SHALL BE RETURNED TO OWNER UPON REQUEST. IT MAY BE SUBJECT TO CERTAIN RESTRICTIONS UNDER APPLICABLE EXPORT CONTROL LAWS AND REGULATIONS.

DRAWN BY:	J.RUPERT
DATE:	05-03-2011
APPROVED BY:	J.RUPERT
DATE:	05-03-2011
PROCESS/FINISH	-
THIRD ANGLE PROJECTION	

Regal Beloit America, Inc.

DESCRIPTION: MODEL-RFHP-48FR OUTLINE

MATERIAL: -

SIZE: C | DWG NO: FSE1028SF | SHEET: 1