Uncontrolled Copy

GENERAL INFORMATION:

SHAFT RUNOUT:	.001 [.03] T.I.R. PER INCH LENGTH OF EXTENSION
BEARINGS:	BALL
MOUNTING POSITION:	ALL ANGLE

ELECTRICAL DATA:

OVERLOAD PROTECTOR:	AUTOMATIC RESET (T.I. 7AM 304)
LINE LEADS:	NO. 18 GA., .06 [1.5] THK. XLP 125°C INSUL.
REVERSING PLUGS:	NO. 18 GA., .03 [.8] THK. XLP 125°C INSUL.
GROUND LEAD:	NO. 18 GA., .03 [.8] THK. (GREEN) INSUL.

NAMEPLATE DATA:	EXTERNAL CONNECTION DIAGRAM
MODEL NO.: F48X90A01 CUST. P/N: SEE NOTE 3 HP: 1/4 ROT.: REVERSIBLE RPM: 1075 TYPE: UF FRAME: 48 VOLTS: 460 PH: 1 AMPS: 1.0 HZ: 60 INS.: F AMB.: 70°C DUTY: AIR OVER CAP.: 7.5 MFD/370 V ENCL: ENCLOSED UL LOGO CSA LOGO THERMALLY PROTECTED	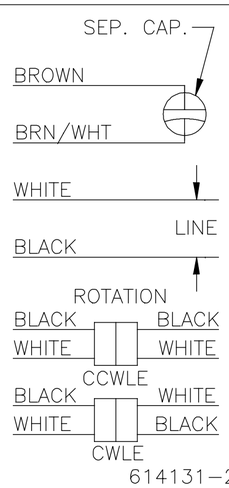

PERFORMANCE CURVE NO.	TORQUE @ 1075 RPM (25°C)	APPROVED SAMPLE	UL COMPONENT		CSA	
			FILE #	CCN #	FILE #	CLASS #
C32582	28.8 OZ. FT.	0601188A	E46412	PRGY2	LR43341	4211-01

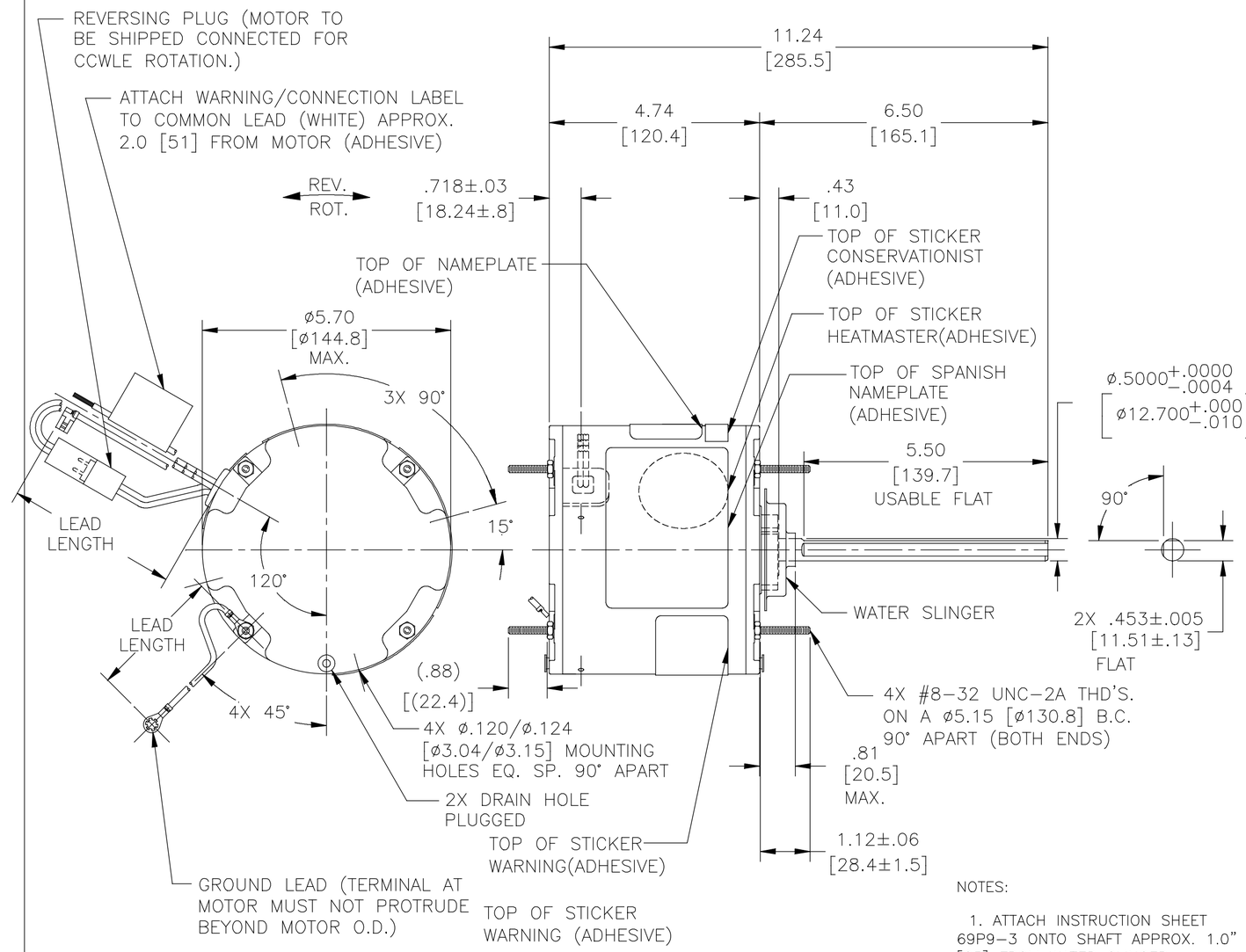

NOTES:

1. ATTACH INSTRUCTION SHEET 69P9-3 ONTO SHAFT APPROX. 1.0" [25] FROM WATER SLINGER

2. DISTRIBUTION SERVICE CUST. P/N: FEH1026SF GRAINGER CUST. P/N: 4ME14.

3.4X SCREWS 615982-001 & 4X HEX NUTS 7555A19H01 TO BE PUT IN A POLYBAG.

GREEN (GROUND)	12.0/13.0 [305/330]	#10 EYELET
BLACK/WHITE	3.0/5.0 [76/127]	REVERSING PLUG
BROWN	48.0/51.0 [1219/1295]	.25 [6.4] FLAG
BROWN/WHITE	48.0/51.0 [1219/1295]	.25 [6.4] FLAG
WHITE	48.0/51.0 [1219/1295]	.50 [12.7] SKIN
BLACK	48.0/51.0 [1219/1295]	.50 [12.7] SKIN
COLOR	LENGTH	TERMINAL OR STRIP LENGTH

LEAD DATA

REGAL-BELOIT CORPORATION (RBC) PROVIDES TECHNICAL ASSISTANCE TO OUR CUSTOMERS IN SEVERAL AREAS. SINCE RBC DOES NOT RECEIVE ALL DATA CONCERNING THE USE AND APPLICATION OF THE MOTOR, THE SUITABILITY OF THE MOTOR FOR THE APPLICATION MUST BE DETERMINED BY THE CUSTOMER.

DIMENSIONS WITHOUT TOLERANCES ARE FOR REFERENCE ONLY.

MAIN FRAME - OLE	ENCLOSED
END FRAME - OLE	ENCLOSED
MAIN FRAME - LE	ENCLOSED
END FRAME - LE	ENCLOSED

ENCLOSURE

CUSTOMER	DISTRIBUTION SERVICE

DRAWING REVISION E	REVISION BY JUDY.ZHU	DATE 02-28-2020
ECO ECO-0182126	APPROVED BY KEYUN.GONG	DATE 02-28-2020
ECO DESCRIPTION @ZONE C2 ADD SPANISH NAMEPLATE		

COPYRIGHT REGAL BELOIT AMERICA, INC. ALL RIGHTS RESERVED. PROPRIETARY AND CONFIDENTIAL INFORMATION — THIS DOCUMENT IS THE PROPERTY OF REGAL BELOIT AMERICA, INC. ("OWNER") AND CONTAINS OWNER'S PROPRIETARY INFORMATION. ANY PERSON, CORPORATION OR OTHER FIRM RECEIVING IT IS DEEMED, BY RECEIVING IT, TO AGREE THAT IT, AND/OR ANY PART OF IT, SHALL NOT BE DISCLOSED TO ANY PERSON, CORPORATION OR OTHER ENTITY, DUPLICATED, AND/OR USED, EXCEPT AS EXPRESSLY APPROVED IN WRITING IN ADVANCE BY OWNER. THIS DOCUMENT SHALL BE RETURNED TO OWNER UPON REQUEST. IT MAY BE SUBJECT TO CERTAIN RESTRICTIONS UNDER APPLICABLE EXPORT CONTROL LAWS AND REGULATIONS.

DRAWN BY: J.RUPERT	Regal Beloit America, Inc.
DATE: 05-10-2011	DESCRIPTION MODEL-RFHP-48FR OUTLINE
APPROVED BY: J.RUPERT	
DATE: 05-10-2011	
PROCESS/FINISH -	MATERIAL -
THIRD ANGLE PROJECTION	SIZE C / DWG NO FEH1026SF / SHEET 1