Uncontrolled Copy

GENERAL INFORMATION:

SHAFT RUNOUT:	.001 [.03] T.I.R. PER INCH LENGTH OF EXTENSION
BEARINGS:	BALL
MOUNTING POSITION:	ALL ANGLE

ELECTRICAL DATA:

OVERLOAD PROTECTOR:	AUTOMATIC RESET (T.I. 7AM 036)
LEADS:	NO. 18 GA., .03 [.8] THK.,XLP 125°C INSUL.
GROUND LEAD:	NO. 18 GA., .03 [.8] THK. (GREEN) INSUL.

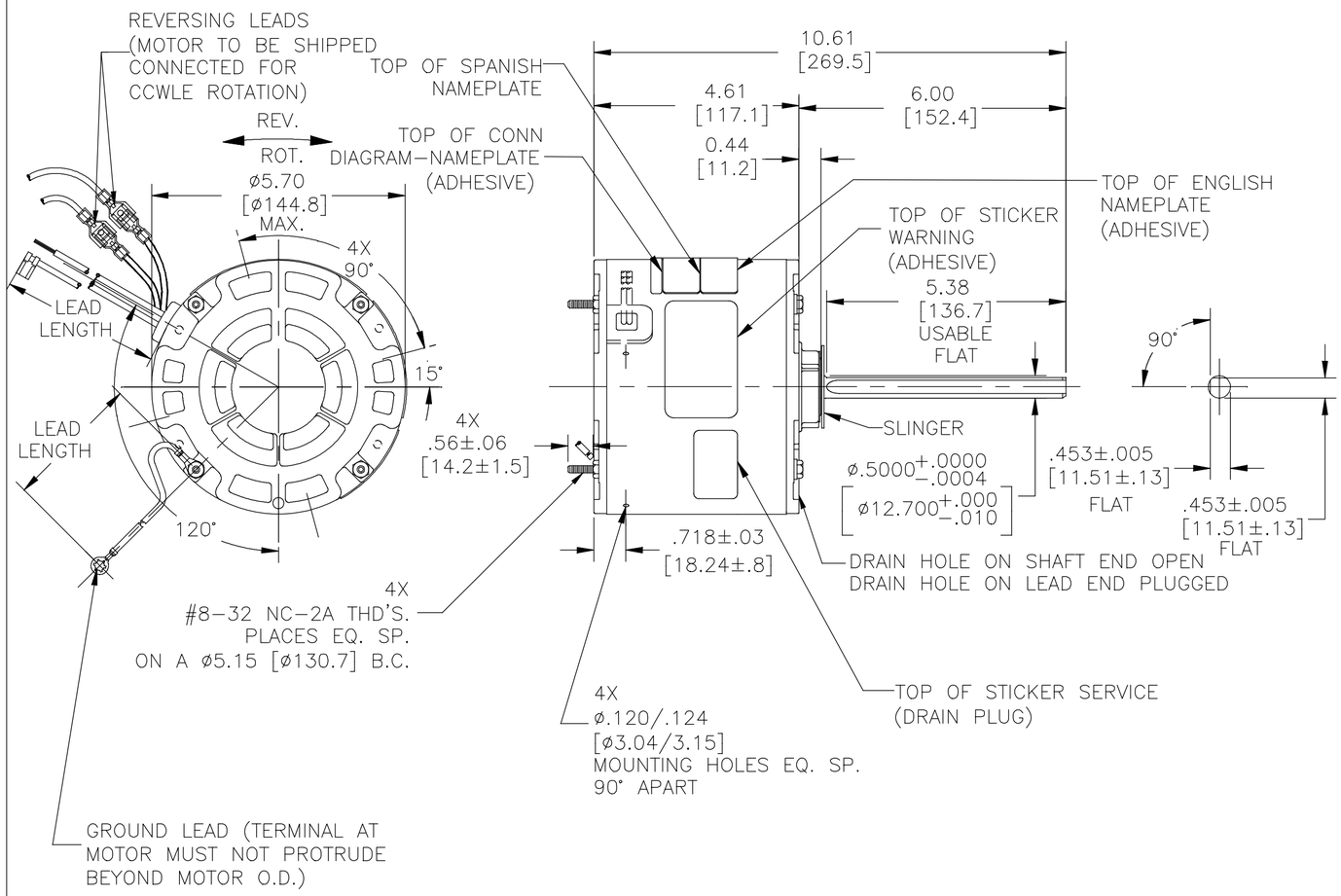

NAMEPLATE DATA:	EXTERNAL CONNECTION DIAGRAM
MODEL NO.: F48AF40A01 CUST. P/N: EM3729F HP: 1/3 ROT.: REVERSIBLE RPM: 1075 TYPE: UF FRAME: 48Y VOLTS: 208-230 PH: 1 AMPS: 2.2-2.5 HZ: 60 INS.: F AMB.: 70°C DUTY: AIR OVER CAP.: 7.5MFD/370V ENCL: ENCLOSED UL LOGO & FILE NO. CSA LOGO & FILE NO. THERMALLY PROTECTED TYPE T	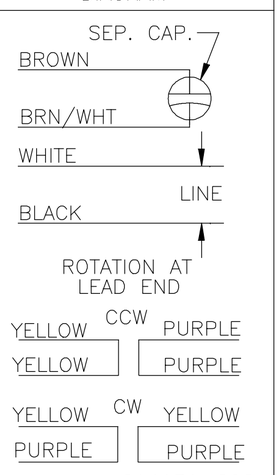

PERFORMANCE CURVE NO.	TORQUE @1075 RPM (25°C)	APPROVED SAMPLE	UL COMPONENT FILE #	UL COMPONENT CNN #	CSA FILE #	CSA CLASS #
C0000711	34.7 OZ. FT.	0603279C	E46412	PRGY2	LR43341	4211-01

GREEN (GROUND)	12.0/13.0 [305/330]	#10 EYELET
PURPLE(REV)	4.0/6.0 [102/152]	.25[6.4] PER-INSUL. MALE TAB
PURPLE(REV)	4.0/6.0 [102/152]	.25[6.4] PER-INSUL. FEMALE SPADE
YELLOW (REV)	4.0/6.0 [102/152]	.25[6.4] PER-INSUL. MALE TAB
YELLOW (REV)	4.0/6.0 [102/152]	.25[6.4] PER-INSUL. FEMALE SPADE
BROWN/WHITE	25.0/27.0 [635/686]	.25 [6.4] FLAG
BROWN	25.0/27.0 [635/686]	.25 [6.4] FLAG
WHITE	25.0/27.0 [635/686]	.50 [12.7] SKIN
BLACK	25.0/27.0 [635/686]	.50 [12.7] SKIN
COLOR	LENGTH	TERMINAL OR STRIP LENGTH

LEAD DATA

NOTES:
1. ECONOMASTER OUTSIDE MOTOR SERIES.
2. 4X SCREWS 615982-001 & 4X HEX NUTS 7555A19H01 TO BE PUT IN A POLYBAG.
3. THE SYMBOL OF CTQ: ▲ (NO CTQ ON THIS DRAWING).
4. MEET THE REQUIREMENT OF RoHS & REACH, SEE EP000014_5.1.

REGAL-BELOIT CORPORATION (RBC) PROVIDES TECHNICAL ASSISTANCE TO OUR CUSTOMERS IN SEVERAL AREAS. SINCE RBC DOES NOT RECEIVE ALL DATA CONCERNING THE USE AND APPLICATION OF THE MOTOR, THE SUITABILITY OF THE MOTOR FOR THE APPLICATION MUST BE DETERMINED BY THE CUSTOMER.

DIMENSIONS WITHOUT TOLERANCES ARE FOR REFERENCE ONLY.

MAIN FRAME - OLE	ENCLOSED
END FRAME - OLE	ENCLOSED
MAIN FRAME - LE	ENCLOSED
END FRAME - LE	ENCLOSED

ENCLOSURE

CUSTOMER	EconoMaster

DRAWING REVISION: J	REVISION BY: NANCY.LIU	DATE: 06-18-2020
ECO: ECO-0187955	APPROVED BY: KEYUN.GONG	DATE: 06-18-2020
ECO DESCRIPTION: SEE ECO		

COPYRIGHT REGAL BELOIT AMERICA, INC. ALL RIGHTS RESERVED. PROPRIETARY AND CONFIDENTIAL INFORMATION — THIS DOCUMENT IS THE PROPERTY OF REGAL BELOIT AMERICA, INC. ("OWNER") AND CONTAINS OWNER'S PROPRIETARY INFORMATION. ANY PERSON, CORPORATION OR OTHER FIRM RECEIVING IT IS DEEMED, BY RECEIVING IT, TO AGREE THAT IT, AND/OR ANY PART OF IT, SHALL NOT BE DISCLOSED TO ANY PERSON, CORPORATION OR OTHER ENTITY, DUPLICATED, AND/OR USED, EXCEPT AS EXPRESSLY APPROVED IN WRITING IN ADVANCE BY OWNER. THIS DOCUMENT SHALL BE RETURNED TO OWNER UPON REQUEST. IT MAY BE SUBJECT TO CERTAIN RESTRICTIONS UNDER APPLICABLE EXPORT CONTROL LAWS AND REGULATIONS.

DRAWN BY: CZ	Regal Beloit America, Inc.
DATE: 12-21-2012	DESCRIPTION: MODEL-RFHP-48FR OUTLINE
APPROVED BY: FJ	
DATE: 12-21-2012	
PROCESS/FINISH: –	MATERIAL: –
THIRD ANGLE PROJECTION	SIZE: C / DWG NO: EM3729F / SHEET: 1