Uncontrolled Copy

GENERAL INFORMATION:

SHAFT RUNOUT: .001 [.03] T.I.R. PER INCH LENGTH OF EXTENSION

BEARINGS: BALL

MOUNTING POSITION: ALL ANGLE

ELECTRICAL DATA:

OVERLOAD PROTECTOR: AUTOMATIC RESET (SENSATA 7AM 036)

LEADS: NO. 18 GA., .03[.8] THK. XLP 125°C INSUL.

REVERSING LEADS: NO. 18 GA., .03[.8] THK. XLP 125°C INSUL.

GROUND LEAD: NO. 18 GA., .03[.8]THK. (GREEN/YELLOW) INSUL.

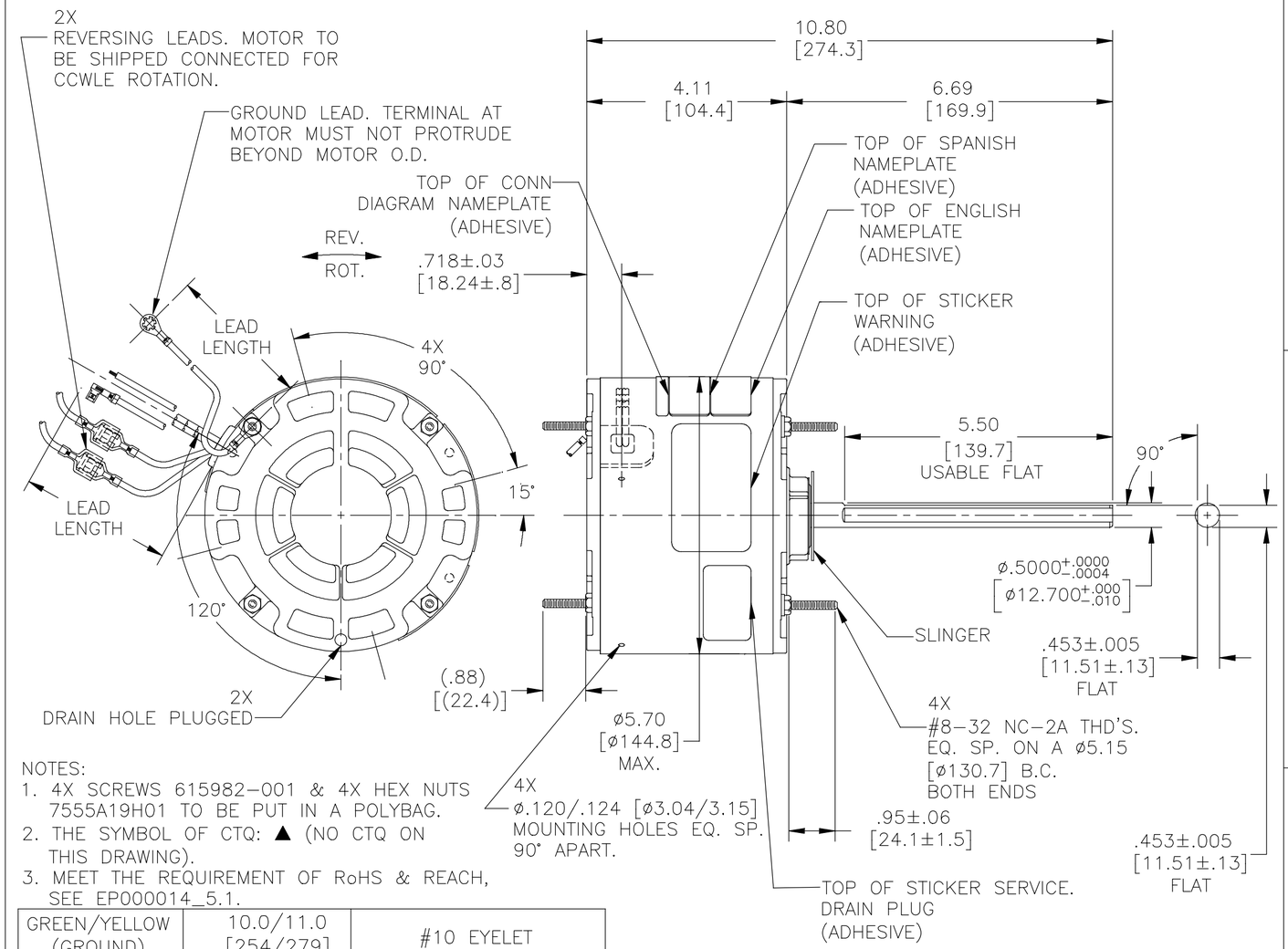

NOTES:
1. 4X SCREWS 615982-001 & 4X HEX NUTS 7555A19H01 TO BE PUT IN A POLYBAG.
2. THE SYMBOL OF CTQ: ▲ (NO CTQ ON THIS DRAWING).
3. MEET THE REQUIREMENT OF RoHS & REACH, SEE EP000014_5.1.

NAMEPLATE DATA:	EXTERNAL CONNECTION DIAGRAM
MODEL NO.: F48AE85A01 CUST. P/N: EM3458 HP: 1/3-1/6 ROT.: REVERSIBLE RPM: 1075 TYPE: UF FRAME: 48Y VOLTS: 208-230 PH: 1 AMPS: 1.8-2.0 HZ: 60 INS.: B AMB.: 60° C DUTY: AIR OVER CAP.: 7.5 MFD/370 V ENCL: ENCLOSED UL LOGO CSA LOGO THERMALLY PROTECTED	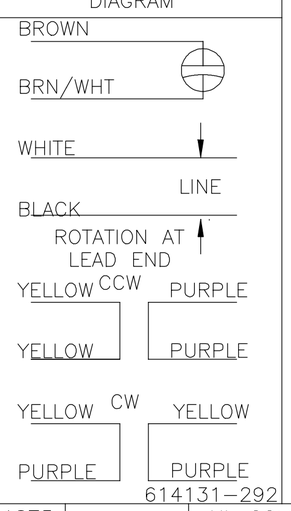

PERFORMANCE CURVE NO.	TORQUE @ 1075 RPM (25°C)	APPROVED SAMPLE	UL COMPONENT		CSA	
			FILE #	CCN #	FILE #	CLASS #
C32109	30.7 OZ. FT.	0243290A	E46412	PRGY2	LR43341	4211-01

GREEN/YELLOW (GROUND)	10.0/11.0 [254/279]	#10 EYELET
PURPLE (REV)	4.0/6.0 [102/152]	.25[6.4] PRE-INSUL. MALE TAB
PURPLE (REV)	4.0/6.0 [102/152]	.25[6.4] PRE-INSUL. FEMALE SPADE
YELLOW (REV)	4.0/6.0 [102/152]	.25[6.4] PRE-INSUL. MALE TAB
YELLOW (REV)	4.0/6.0 [102/152]	.25[6.4] PRE-INSUL. FEMALE SPADE
BROWN	48.0/51.0 [1219/1295]	.25[6.4] FLAG
BROWN/WHITE	48.0/51.0 [1219/1295]	.25[6.4] FLAG
WHITE	48.0/51.0 [1219/1295]	.50[12.7] SKIN
BLACK	48.0/51.0 [1219/1295]	.50[12.7] SKIN
COLOR	LENGTH	TERMINAL OR STRIP LENGTH

LEAD DATA

REGAL-BELOIT CORPORATION (RBC) PROVIDES TECHNICAL ASSISTANCE TO OUR CUSTOMERS IN SEVERAL AREAS. SINCE RBC DOES NOT RECEIVE ALL DATA CONCERNING THE USE AND APPLICATION OF THE MOTOR, THE SUITABILITY OF THE MOTOR FOR THE APPLICATION MUST BE DETERMINED BY THE CUSTOMER.

DIMENSIONS WITHOUT TOLERANCES ARE FOR REFERENCE ONLY.

MAIN FRAME - OLE	ENCLOSED
END FRAME - OLE	ENCLOSED
MAIN FRAME - LE	ENCLOSED
END FRAME - LE	ENCLOSED

ENCLOSURE

CUSTOMER	EconoMaster

DRAWING REVISION: J	REVISION BY: GELINE.ZHAO	DATE: 06-12-2020
ECO: ECO-0187793	APPROVED BY: KEYUN.GONG	DATE: 06-12-2020
ECO DESCRIPTION: SEE ECO		

COPYRIGHT REGAL BELOIT AMERICA, INC. ALL RIGHTS RESERVED. PROPRIETARY AND CONFIDENTIAL INFORMATION - THIS DOCUMENT IS THE PROPERTY OF REGAL BELOIT AMERICA, INC. ("OWNER") AND CONTAINS OWNER'S PROPRIETARY INFORMATION. ANY PERSON, CORPORATION OR OTHER FIRM RECEIVING IT IS DEEMED, BY RECEIVING IT, TO AGREE THAT IT, AND/OR ANY PART OF IT, SHALL NOT BE DISCLOSED TO ANY PERSON, CORPORATION OR OTHER ENTITY, DUPLICATED, AND/OR USED, EXCEPT AS EXPRESSLY APPROVED IN WRITING IN ADVANCE BY OWNER. THIS DOCUMENT SHALL BE RETURNED TO OWNER UPON REQUEST. IT MAY BE SUBJECT TO CERTAIN RESTRICTIONS UNDER APPLICABLE EXPORT CONTROL LAWS AND REGULATIONS.

DRAWN BY: P.ZHU	Regal Beloit America, Inc.	
DATE: 10-11-2011		
APPROVED BY: T.WANG	DESCRIPTION: MODEL-RFHP-48FR OUTLINE	
DATE: 10-11-2011		
PROCESS/FINISH: -	MATERIAL: -	
THIRD ANGLE PROJECTION	SIZE: C	DWG NO: EM3458
		SHEET: 1