MINI-MASTERZONE™

Zoning System

Model MMZ3 and MMP3

- NEW Color Coded Push-In Wiring Blocks
- Economy Two and Three Zone Control Panel
- Heating Only
- Cooling Only
- Single Stage Heating and Cooling
- Indicator LEDs for System Operation

The Mini MasterZone™ Zoning Panel is a 2 and 3 zone, single stage heating and cooling control panel. This electronic panel provides the simplest zoning functions and works with all standard heating and cooling thermostats. This panel has two models to control different damper motors. The MMZ3 controls 24VAC damper motors. The NEW MMP3, shown in photo, controls the New Plug-in Zone Motors that use modular cords, supplied with each damper and the DC motors. This panel is used exclusively with the ZDSP, ZDBP, RDP and RRP dampers.

The MM panels are designed to use a minimum of wires to make zoning simple and affordable. Each zone uses a standard 4 wire (Y-G-R-W) thermostat. The panels also feature a separate C – Common terminal for 24 Volt powered thermostats. All terminal blocks are color coded for each wire and have push–in connections making wiring even simpler and no need for a small screwdriver, as with all other zoning panels. The state of the art surface mount technology for all electronic components makes for a highly reliable control panel.

The zoning operation is very simple and basic. Any zone can call for heating or cooling. Once the first zone calls, the panel will only accept other calls for the same mode, either heating or cooling. Once all of these calls are satisfied, or a maximum of 20 minutes elapses, the panel with cut off the HVAC Unit, purge the conditioned air in the duct system and then look for opposite calls. If opposite calls exist the panel will switch over and supply that mode for the zones calling. When all zones are satisfied for both heating and cooling, the panel will then accept Fan calls from each thermostat's Fan switch. This will provide for zoned air circulation. Zones where the thermostat's fan switch is ON, will have their dampers open and the fan circulating air continuously. Zones where the Fan switch is in AUTO, will close their damper until a call is needed for heating or cooling. If all thermostat Fan switches are in AUTO, the fan will be off and all dampers return to a normally open position awaiting a call.

The panel also has simple Light Emitting Diodes (LED) indicators to easily monitor the system status. Two LEDs can be seen through the panel's front cover. These monitor the basic system operation. The SYSTEM LED is a 3 color LED and can indicate when there is a call for Heating, the LED will be RED; a call for Cooling the LED will be GREEN; and neither a call for heating or cooling however if the Fan is ON for any zone the LED will be AMBER. The second LED will be GREEN at all times indicating power is applied to the panel. Each zone has a small green indicator light as well showing when it is calling and the zone damper will be open.

The MM panels are compatible with any single stage heating and cooling system and is affordable enough that it can also be used to zone heating only or cooling only systems as well. It can control any Gas-Oil or Electric Heating Furnace, with or without Cooling and also zone Hydro-Air Systems using a hot water coil in a cooling air handler.



Dimensional Drawing

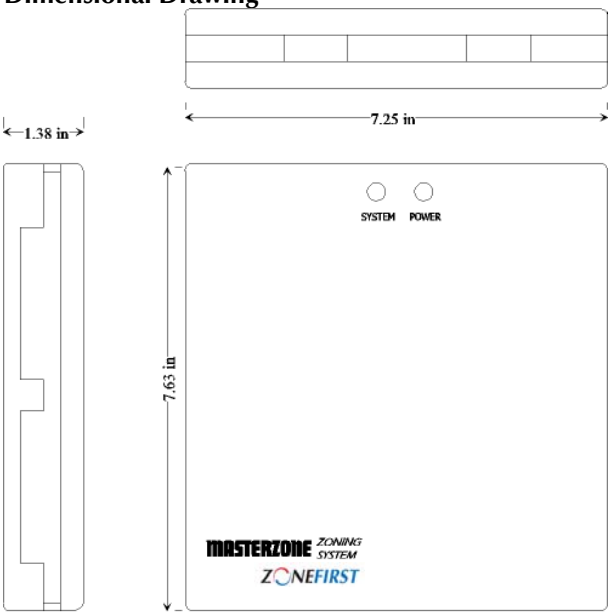

Panel Specifications

Construction – ABS plastic

Number of Zones – 2 and 3 Zones, Single Stage Heating and Cooling

Dimensions – 7-5/8″x 7-1/4″ x 1-3/8″

Voltage – 24 Volts AC, 50/60 Hz

Temperature Rating - 0°F to 120°F Operating, -20°F to 140°F Storage

Humidity – 5% to 95% Non-Condensing

Connection: Screwless push-in terminal blocks

© Copyright Trolex Corporation & ZoneFirst
20 Bushes Lane - Elmwood Park, NJ 07407 | 1-877-FirstZone (347-7896)
ZoneFirst.com | Shop Online at ZoneDampers.com | fb.com/ZoneFirst

WIRING DIAGRAM

WIRING SHOWN WITH 24VAC Damper Motors

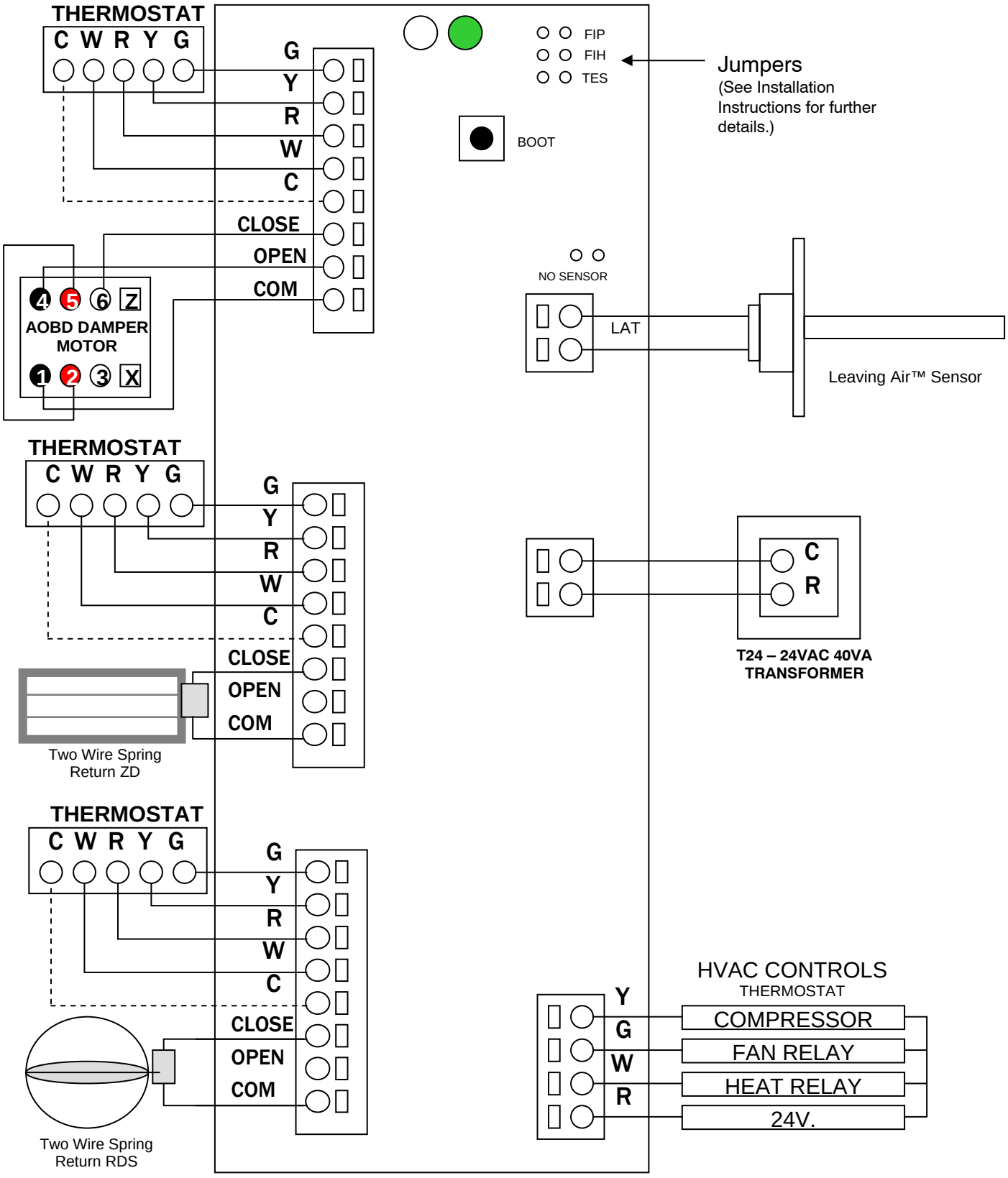

© Copyright Trolex Corporation & ZoneFirst
20 Bushes Lane - Elmwood Park, NJ 07407 | 1-877-FirstZone (347-7896)
ZoneFirst.com | Shop Online at ZoneDampers.com | fb.com/ZoneFirst