PRODUCT HIGHLIGHTS:

THE STORM COLLARS ARE DESIGNED TO PAIR SEAMLESSLY WITH FLASHINGS, BASES, AND PIPES TO CREATE A DEPENDABLE WEATHER BARRIER. CONSTRUCTED FROM HEAVY-DUTY 26-GAUGE GALVANIZED STEEL, THESE COLLARS PROVIDE LONG-LASTING DURABILITY AND SUPERIOR PROTECTION AGAINST WATER INTRUSION.

ENGINEERED TO DIVERT WATER AWAY FROM PIPES, THE STORM COLLARS ARE COMPATIBLE WITH ARTIS METALS METAL PIPE FLASHINGS FOR ENHANCED PERFORMANCE. AVAILABLE IN SIZES RANGING FROM 3 INCHES TO 24 INCHES, EACH COLLAR FEATURES A 2-INCH WIDE DESIGN FOR OPTIMAL COVERAGE. FOR ADDITIONAL B-VENT PIPE SIZES, PLEASE CONTACT US. THE ARTIS STORM COLLARS ARE THE IDEAL SOLUTION FOR ENSURING A SECURE, WATERTIGHT SEAL IN ANY ROOFING APPLICATION.



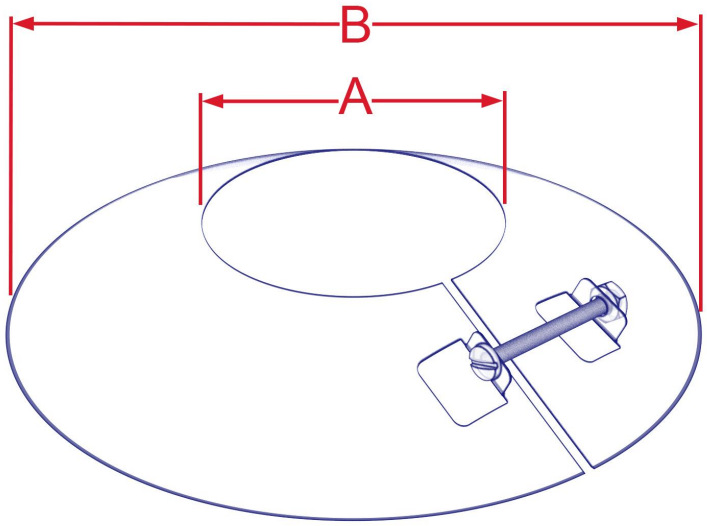

SKU	SIZE | A	B
SC3	3	7
SC4	4	8
SC5	5	9
SC6	6	10
SC7	7	11
SC8	8	12

SKU	SIZE | A	B
SC9	9	13
SC10	10	14
SC12	12	16
SC14	14	18
SC16	16	20
SC18	18	22

Copyright © Artis Metals HVAC
Vent Manufacturer
2019 All Rights Reserved