PolarPan™
HEAVY DUTY HVAC PANS

HANGING INSTALLATION INSTRUCTIONS

Method 1 - Utilize Metal Strap Under Pan (Preferred)

For PolarPans that will be hanging, **utilize four (4) metal straps beneath pan.** Secure straps with self tapping screws at the **eight (8) marked locations** on side of pan to evenly distribute the load and support the pan. Supports must be inside of the air handler/unit frame. Hanging straps must be suspended to structural material above (ex: 2x4 lumber, Unistrut, etc.).

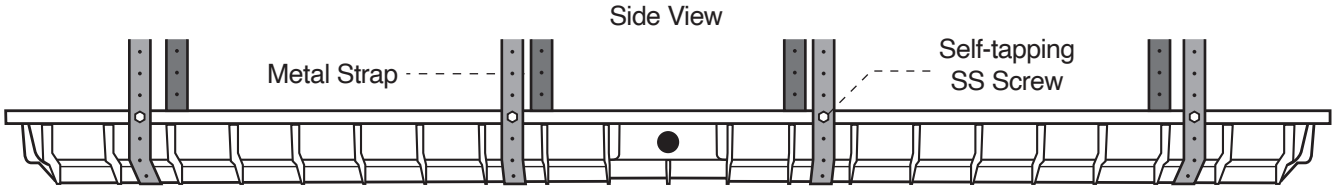

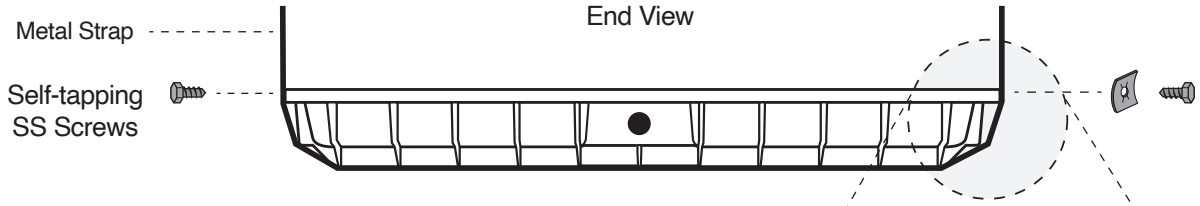

Installation

Step 1 - Attach metal strap to upper support and run under pan

Step 2 - Attach side 1 and level

Step 3 - After pan is level/pitched, drive self-tapping screw in upper lip (#8) to hold pan and strap in place

Step 4 - Attach side 2 and level from side 1

Step 5 - Once pan is level/pitched to side 1 and appropriately pitched for drain, drive self-tapping screw (#8) in upper lip to hold pan and strap in place

Step 6 - Secure all self-tapping screws by fastening flat nuts on the inside of the pan wall (right)

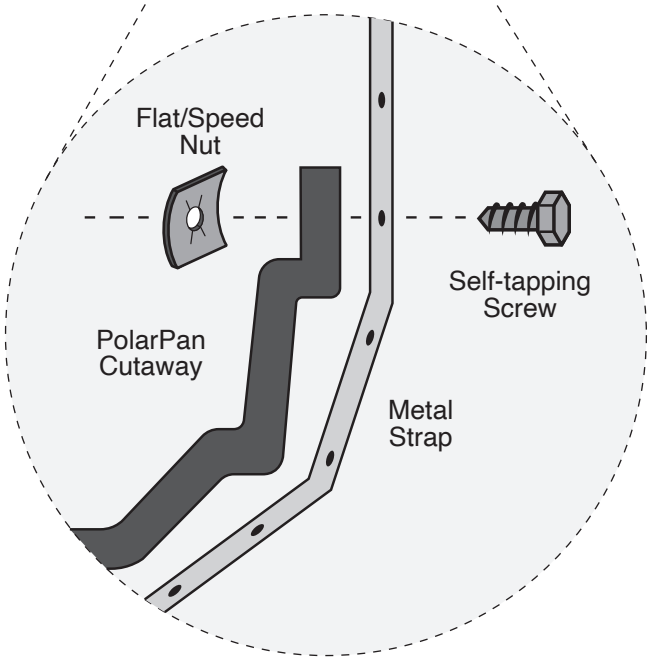

MADE IN THE USA

Distributed by RECTORSEAL
A CSW Industrials Company

RectorSeal® 2601 Spenwick Drive, Houston, TX 77055 • 800-231-3345 • www.rectorseal.com

A CSW Industrials Company. RectorSeal, the logos and other trademarks are property of RectorSeal, LLC, its affiliates or its licensor's and are protected by copyright, trademark and other intellectual property laws, and may not be used without permission. RectorSeal reserves the right to change specifications without prior notice. ©2024 RectorSeal. All rights reserved. R51332-1025

DuraPlas® SOLUTIONS THAT LAST

PolarPan™
HEAVY DUTY HVAC PANS

HANGING INSTALLATION INSTRUCTIONS

Method 2 - Individual Metal Straps Attached to Pan Lip (Alternate)

For PolarPans that will be hanging, utilize **eight (8) metal straps secured at marked locations** on the side of pan to evenly distribute the load and support the pan. Supports must be inside of the air handler / unit frame. Hanging straps must be suspended to structural material above (ex: 2x4 lumber, Unistrut, etc.).

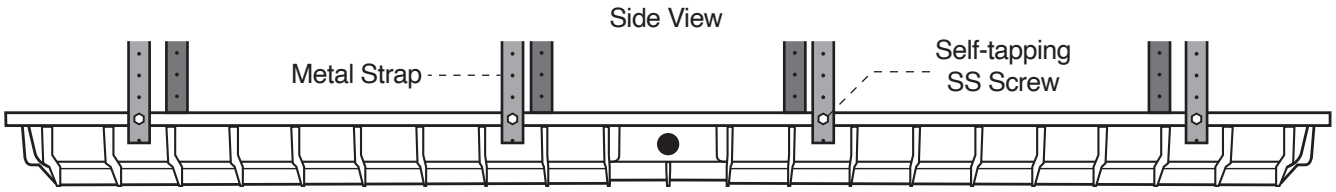

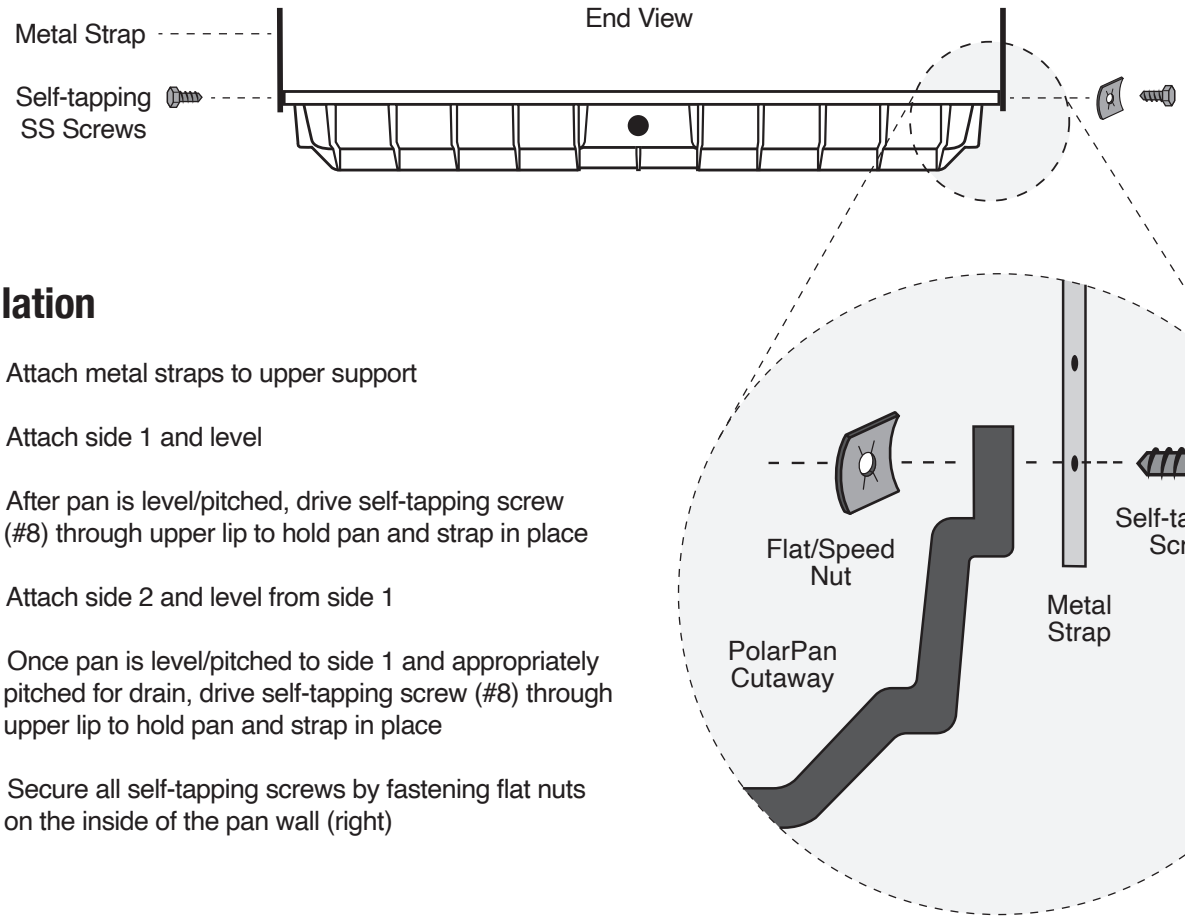

Installation

Step 1 - Attach metal straps to upper support

Step 2 - Attach side 1 and level

Step 3 - After pan is level/pitched, drive self-tapping screw (#8) through upper lip to hold pan and strap in place

Step 4 - Attach side 2 and level from side 1

Step 5 - Once pan is level/pitched to side 1 and appropriately pitched for drain, drive self-tapping screw (#8) through upper lip to hold pan and strap in place

Step 6 - Secure all self-tapping screws by fastening flat nuts on the inside of the pan wall (right)

MADE IN THE USA

Distributed by RECTORSEAL
A CSW Industrials Company

RectorSeal® 2601 Spenwick Drive, Houston, TX 77055 • 800-231-3345 • www.rectorseal.com

A CSW Industrials Company. RectorSeal, the logos and other trademarks are property of RectorSeal, LLC, its affiliates or its licensor's and are protected by copyright, trademark and other intellectual property laws, and may not be used without permission. RectorSeal reserves the right to change specifications without prior notice. ©2024 RectorSeal. All rights reserved. R51332-1025

DuraPlas® SOLUTIONS THAT LAST

PolarPan™
HEAVY DUTY HVAC PANS

HANGING INSTALLATION INSTRUCTIONS

Installing Fittings & Float Switches

PolarPan Heavy Duty HVAC Pans come with drain ports on both the long and short sides. Fittings and washers should always be installed on the outside of the pan, and secured from the inside with a pan nut. Install the drain fitting at the desired drain area, and seal the remaining drain port with washer, plug and nut provided. Failure to properly secure the fittings may result in water leaks and property damage.

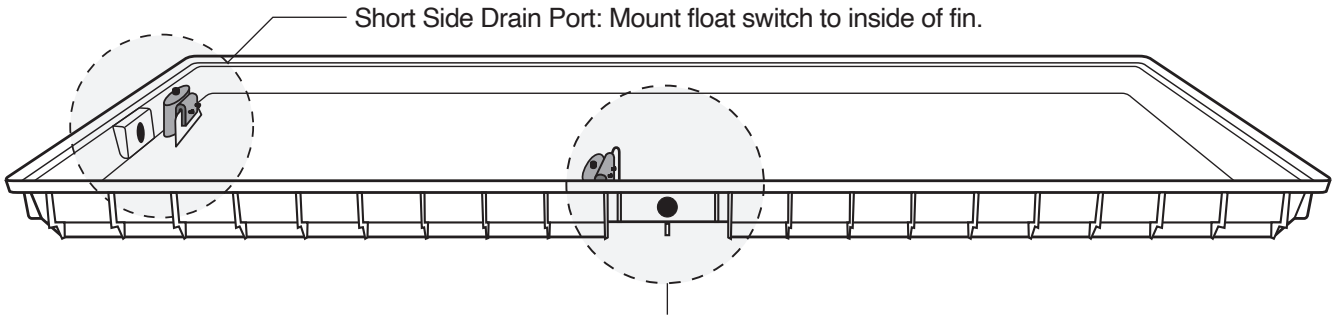

Fitting Installation

Step 1 - Select port most easily accessed for drain installation. Opposite port should be plugged.

Step 2 - Insert male fitting (drain) through washer and drain port from the exterior of pan.

Step 3 - Hand-tighten pan nut on the interior of pan with the teeth facing out. Do not over-tighten.

Step 4 - Insert male fitting (plug) through washer and drain port from the exterior of pan on opposite port (non-drain side of pan).

Step 5 - Hand-tighten pan nut on the interior of pan. Do not over-tighten.

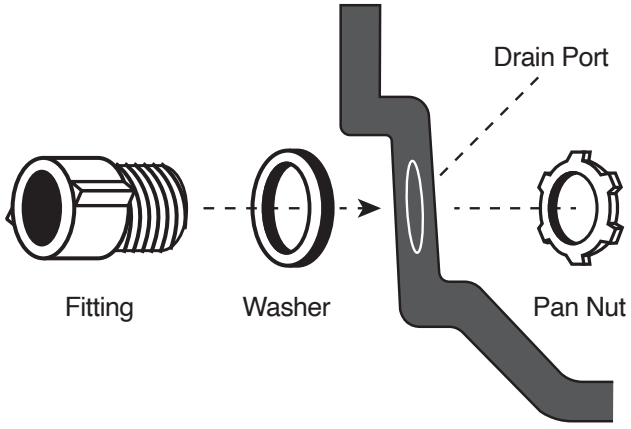

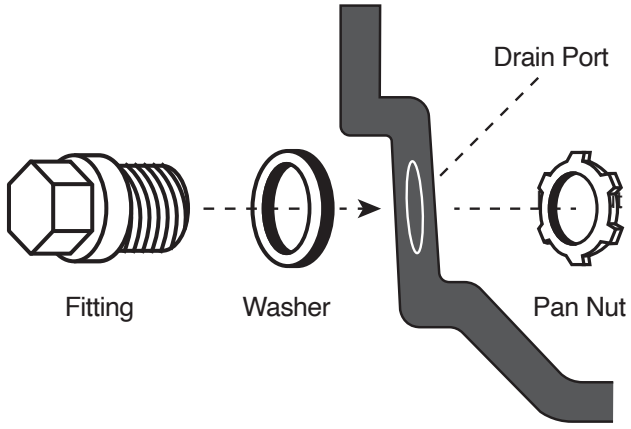

Float Switch Installation

Short Side Drain Port: Mount float switch to inside of fin.
Long Side Drain Port: Mount float switch to outside of fin.

MADE IN THE USA

Distributed by RECTORSEAL
A CSW Industrials Company

RectorSeal® 2601 Spenwick Drive, Houston, TX 77055 • 800-231-3345 • www.rectorseal.com

A CSW Industrials Company. RectorSeal, the logos and other trademarks are property of RectorSeal, LLC, its affiliates or its licensor's and are protected by copyright, trademark and other intellectual property laws, and may not be used without permission. RectorSeal reserves the right to change specifications without prior notice. ©2024 RectorSeal. All rights reserved. R51332-1025

DuraPlas® SOLUTIONS THAT LAST