SHOCKWAVE IMPACT DUTY™ SOCKETS

6 PT STANDARD

SHOCKWAVE Impact Duty™ 1/4" Drive Standard Sockets

Part Number	Description	Depth	Diameter	Type	L	D1	D2	Min Hex Depth
49-66-6000	1/4" Drive	Standard	3/16"	A	25	8	13.8	2.8
49-66-6001	1/4" Drive	Standard	7/32"	A	25	8.5	13.8	3.2
49-66-6002	1/4" Drive	Standard	1/4"	A	25	9.4	13.8	3.2
49-66-6003	1/4" Drive	Standard	9/32"	A	25	10.8	13.8	3.2
49-66-6004	1/4" Drive	Standard	5/16"	A	25	11.8	13.8	3.6
49-66-6005	1/4" Drive	Standard	11/32"	A	25	12.8	13.8	4
49-66-6006	1/4" Drive	Standard	3/8"	B	25	14.5	13.8	4
49-66-6007	1/4" Drive	Standard	7/16"	B	25	15.8	13.8	5.2
49-66-6008	1/4" Drive	Standard	1/2"	B	25	17.8	15.7	5.3
49-66-6009	1/4" Drive	Standard	9/16"	B	25	19.8	17.3	7.1
49-66-6022	1/4" Drive	Standard	4mm	B	25	16.8	14.7	6.1
49-66-6023	1/4" Drive	Standard	4.5mm	B	25	18	15.7	6.8
49-66-6024	1/4" Drive	Standard	5mm	B	25	19.8	17.3	7.5
49-66-6025	1/4" Drive	Standard	5.5mm	B	25	20.8	18.3	7.5
49-66-6026	1/4" Drive	Standard	6mm	A	50	8	13.8	2.8
49-66-6027	1/4" Drive	Standard	7mm	A	50	8.5	13.8	3.2
49-66-6028	1/4" Drive	Standard	8mm	A	50	9.4	13.8	3.2
49-66-6029	1/4" Drive	Standard	9mm	A	50	10.8	13.8	3.2
49-66-6030	1/4" Drive	Standard	10mm	A	50	11.8	13.8	3.6
49-66-6031	1/4" Drive	Standard	11mm	A	50	12.8	13.8	4
49-66-6032	1/4" Drive	Standard	12mm	B	50	14.5	13.8	4
49-66-6033	1/4" Drive	Standard	13mm	B	50	15.8	13.8	5.2
49-66-6034	1/4" Drive	Standard	14mm	B	50	17.8	15.7	5.3
49-66-6035	1/4" Drive	Standard	15mm	B	50	19.8	17.3	7.1

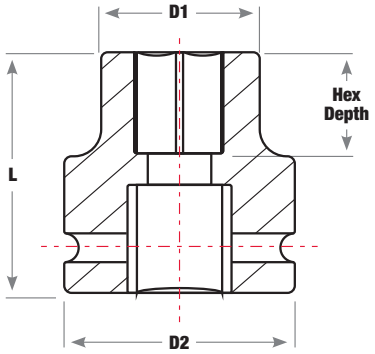

TYPE A

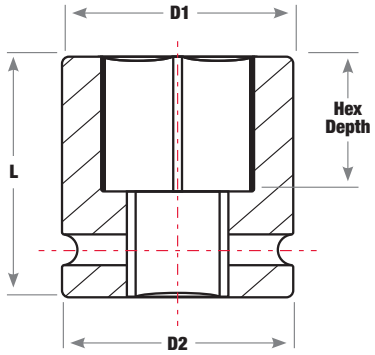

TYPE B

6 PT DEEP

SHOCKWAVE Impact Duty™ 1/4" Drive Deep Sockets

Part Number	Description	Depth	Diameter	Type	L	D1	D2	Min Hex Depth
49-66-6011	1/4" Drive	Deep	3/16"	A	25	7.6	13.8	1.9
49-66-6012	1/4" Drive	Deep	7/32"	A	25	8	13.8	2.2
49-66-6013	1/4" Drive	Deep	1/4"	A	25	8	13.8	2.8
49-66-6014	1/4" Drive	Deep	9/32"	A	25	8.5	13.8	2.8
49-66-6015	1/4" Drive	Deep	5/16"	A	25	9.6	13.8	3.1
49-66-6016	1/4" Drive	Deep	11/32"	A	25	10.8	13.8	3.6
49-66-6017	1/4" Drive	Deep	3/8"	A	25	12	13.8	3.6
49-66-6018	1/4" Drive	Deep	7/16"	A	25	13	13.8	4.1
49-66-6019	1/4" Drive	Deep	1/2"	B	25	14.8	13.8	4.6
49-66-6020	1/4" Drive	Deep	9/16"	B	25	15.8	13.8	5.5
49-66-6036	1/4" Drive	Deep	4mm	A	50	7.6	13.8	1.9
49-66-6037	1/4" Drive	Deep	4.5mm	A	50	8	13.8	2.2
49-66-6038	1/4" Drive	Deep	5mm	A	50	8	13.8	2.8
49-66-6039	1/4" Drive	Deep	5.5mm	A	50	8.5	13.8	2.8
49-66-6040	1/4" Drive	Deep	6mm	A	50	9.6	13.8	3.1
49-66-6041	1/4" Drive	Deep	7mm	A	50	10.8	13.8	3.6

CONTINUED

6 PT DEEP

SHOCKWAVE Impact Duty™ 1/4" Drive Deep Sockets

Part Number	Description	Depth	Diameter	Type	L	D1	D2	Min Hex Depth
49-66-6042	1/4" Drive	Deep	8mm	A	50	12	13.8	3.6
49-66-6043	1/4" Drive	Deep	9mm	A	50	13	13.8	4.1
49-66-6044	1/4" Drive	Deep	10mm	B	50	14.8	13.8	4.6
49-66-6045	1/4" Drive	Deep	11mm	B	50	15.8	13.8	5.5
49-66-6046	1/4" Drive	Deep	12mm	B	50	16.8	14.7	6.1
49-66-6047	1/4" Drive	Deep	13mm	B	50	18	15.7	6.8
49-66-6048	1/4" Drive	Deep	14mm	B	50	19.8	17.3	7.5
49-66-6049	1/4" Drive	Deep	15mm	B	50	20.8	18.3	7.5

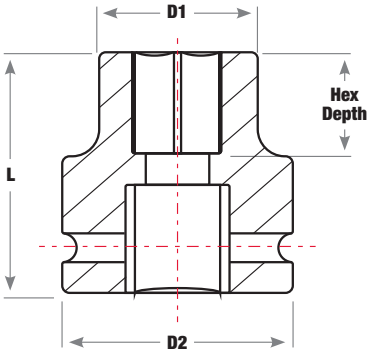

TYPE A

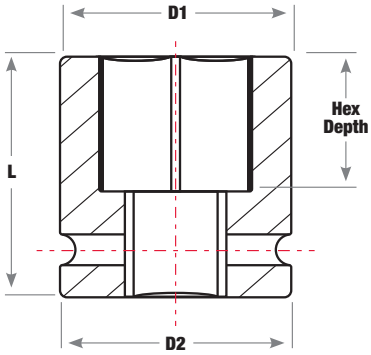

TYPE B

SHOCKWAVE IMPACT DUTY™ SOCKETS

6 PT STANDARD

SHOCKWAVE Impact Duty™ 3/8" Drive Standard Sockets

Part Number	Description	Depth	Diameter	Type	L	D1	D2	Min Hex Depth
49-66-6100	3/8" Drive	Standard	1/4"	A	32	12	18.8	3.3
49-66-6101	3/8" Drive	Standard	9/32"	A	32	12.6	18.8	3.7
49-66-6102	3/8" Drive	Standard	5/16"	A	32	12.8	18.8	3.6
49-66-6103	3/8" Drive	Standard	11/32"	A	32	13.8	18.8	4
49-66-6104	3/8" Drive	Standard	3/8"	A	32	15	18.8	4
49-66-6105	3/8" Drive	Standard	7/16"	A	32	16.9	18.8	5.2
49-66-6106	3/8" Drive	Standard	1/2"	A	32	19.5	20.7	5.3
49-66-6107	3/8" Drive	Standard	9/16"	A	32	20.5	21.8	6.3
49-66-6108	3/8" Drive	Standard	5/8"	B	32	23.8	23	7.1
49-66-6109	3/8" Drive	Standard	11/16"	B	34	24.8	23	8.1
49-66-6110	3/8" Drive	Standard	3/4"	B	34	27	23	9
49-66-6111	3/8" Drive	Standard	13/16"	B	34	29.8	23	11.2
49-66-6112	3/8" Drive	Standard	7/8"	B	34	31.8	23	12.1
49-66-6113	3/8" Drive	Standard	15/16"	B	34	33.8	23	13
49-66-6114	3/8" Drive	Standard	1"	B	34	35.8	23	13.9
49-66-6130	3/8" Drive	Standard	6mm	B	34	29.8	23	11.7
49-66-6131	3/8" Drive	Standard	7mm	B	34	31.6	23	12.5
49-66-6132	3/8" Drive	Standard	8mm	B	34	31.8	23	12.7
49-66-6133	3/8" Drive	Standard	9mm	B	34	33.8	23	13.9
49-66-6134	3/8" Drive	Standard	10mm	A	65	12	18.8	3.3
49-66-6135	3/8" Drive	Standard	11mm	A	65	12.6	18.8	3.7
49-66-6136	3/8" Drive	Standard	12mm	A	65	12.8	18.8	3.6
49-66-6137	3/8" Drive	Standard	13mm	A	65	13.8	18.8	4
49-66-6138	3/8" Drive	Standard	14mm	A	65	15	18.8	4
49-66-6139	3/8" Drive	Standard	15mm	A	65	16.9	18.8	5.2
49-66-6140	3/8" Drive	Standard	16mm	A	65	19.5	20.7	5.3
49-66-6141	3/8" Drive	Standard	17mm	A	65	20.5	21.8	6.3
49-66-6142	3/8" Drive	Standard	18mm	B	65	23.8	23	7.1
49-66-6143	3/8" Drive	Standard	19mm	B	65	24.8	23	8.1
49-66-6737	3/8" Drive	Standard	20mm	B	65	27	23	9
49-66-6144	3/8" Drive	Standard	21mm	B	65	29.8	23	11.2
49-66-6145	3/8" Drive	Standard	22mm	B	65	31.8	23	12.1
49-66-6146	3/8" Drive	Standard	23mm	B	65	33.8	23	13
49-66-6147	3/8" Drive	Standard	24mm	B	65	35.8	23	13.9

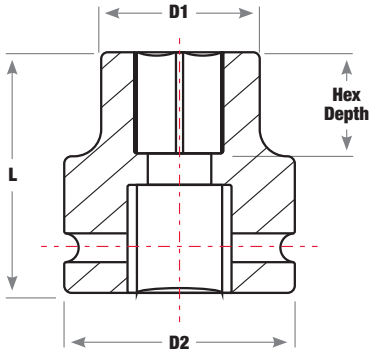

TYPE A

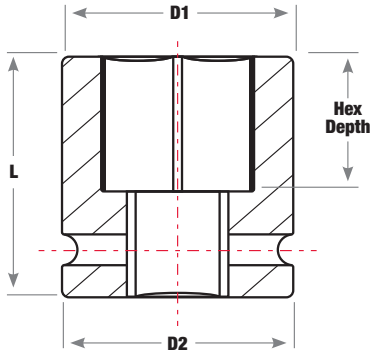

TYPE B

6 PT DEEP

SHOCKWAVE Impact Duty™ 3/8" Drive Deep Sockets

Part Number	Description	Depth	Diameter	Type	L	D1	D2	Min Hex Depth
49-66-6115	3/8" Drive	Deep	1/4"	A	32	10.5	18.8	3.1
49-66-6116	3/8" Drive	Deep	9/32"	A	32	12.6	18.8	3.6
49-66-6117	3/8" Drive	Deep	5/16"	A	32	13.9	18.8	3.6
49-66-6118	3/8" Drive	Deep	11/32"	A	32	14.5	18.8	4.1

CONTINUED

6 PT DEEP

SHOCKWAVE Impact Duty™ 3/8" Drive Deep Sockets

Part Number	Description	Depth	Diameter	Type	L	D1	D2	Min Hex Depth
49-66-6119	3/8" Drive	Deep	3/8"	A	32	15.8	18.8	4.6
49-66-6120	3/8" Drive	Deep	7/16"	A	32	16.9	18.8	5.5
49-66-6121	3/8" Drive	Deep	1/2"	A	32	18.2	18.8	6.1
49-66-6122	3/8" Drive	Deep	9/16"	A	32	19.5	21.8	6.8
49-66-6123	3/8" Drive	Deep	5/8"	A	32	20.5	21.8	8.4
49-66-6124	3/8" Drive	Deep	11/16"	A	32	21.8	21.8	8.4
49-66-6125	3/8" Drive	Deep	3/4"	B	32	23.8	23	9.6
49-66-6126	3/8" Drive	Deep	13/16"	B	34	24.8	23	9.6
49-66-6127	3/8" Drive	Deep	7/8"	B	34	25.8	23	10.2
49-66-6128	3/8" Drive	Deep	15/16"	B	34	27.6	23	11
49-66-6129	3/8" Drive	Deep	1"	B	34	27.8	23	11
49-66-6148	3/8" Drive	Deep	6mm	A	65	10.5	18.8	3.1
49-66-6149	3/8" Drive	Deep	7mm	A	65	12.6	18.8	3.6
49-66-6150	3/8" Drive	Deep	8mm	A	65	13.9	18.8	3.6
49-66-6151	3/8" Drive	Deep	9mm	A	65	14.5	18.8	4.1
49-66-6152	3/8" Drive	Deep	10mm	A	65	15.8	18.8	4.6
49-66-6153	3/8" Drive	Deep	11mm	A	65	16.9	18.8	5.5
49-66-6154	3/8" Drive	Deep	12mm	A	65	18.8	18.8	6.1
49-66-6155	3/8" Drive	Deep	13mm	A	65	19.5	21.8	6.8
49-66-6156	3/8" Drive	Deep	14mm	A	65	20.5	21.8	8.4
49-66-6157	3/8" Drive	Deep	15mm	A	65	21.8	21.8	8.4
49-66-6158	3/8" Drive	Deep	16mm	B	65	23.8	23	9.6
49-66-6159	3/8" Drive	Deep	17mm	B	65	24.8	23	9.6
49-66-6160	3/8" Drive	Deep	18mm	B	65	25.8	23	10.2
49-66-6161	3/8" Drive	Deep	19mm	B	65	27.6	23	11
49-66-6738	3/8" Drive	Deep	20mm	B	65	27.8	23	11
49-66-6162	3/8" Drive	Deep	21mm	B	65	29.8	23	11.7
49-66-6163	3/8" Drive	Deep	22mm	B	65	31.6	23	12.5
49-66-6164	3/8" Drive	Deep	23mm	B	65	31.8	23	12.7
49-66-6165	3/8" Drive	Deep	24mm	B	65	33.8	23	13.9

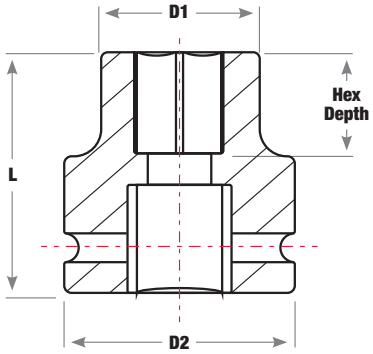

TYPE A

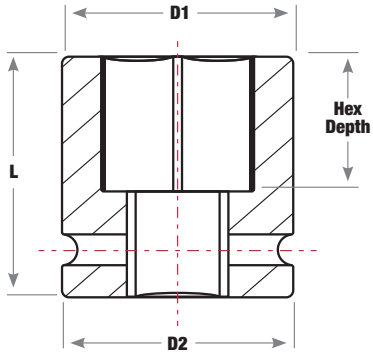

TYPE B

SHOCKWAVE IMPACT DUTY™ SOCKETS

6 PT STANDARD

SHOCKWAVE Impact Duty™ 1/2" Drive Standard Sockets

Part Number	Description	Depth	Diameter	Type	L	D1	D2	Min Hex Depth
49-66-6200	1/2" Drive	Standard	3/8"	A	38	17.5	24.8	4
49-66-6201	1/2" Drive	Standard	7/16"	A	38	18	24.8	5.2
49-66-6202	1/2" Drive	Standard	1/2"	A	38	20	24.8	5.3
49-66-6203	1/2" Drive	Standard	9/16"	A	38	22	24.8	6.3
49-66-6204	1/2" Drive	Standard	5/8"	A	38	24	24.8	7.1
49-66-6205	1/2" Drive	Standard	11/16"	A	38	26	29.8	8.1
49-66-6206	1/2" Drive	Standard	3/4"	A	38	28	29.8	9
49-66-6207	1/2" Drive	Standard	13/16"	A	38	29.8	29.8	10.6
49-66-6208	1/2" Drive	Standard	7/8"	B	38	31.8	30	12.2
49-66-6209	1/2" Drive	Standard	15/16"	B	40	33.8	30	12.4
49-66-6210	1/2" Drive	Standard	1"	B	42	35.8	30	12.4
49-66-6211	1/2" Drive	Standard	1-1/16"	B	42	37.8	30	12.4
49-66-6212	1/2" Drive	Standard	1-1/8"	B	42	39.8	30	16.1
49-66-6213	1/2" Drive	Standard	1-3/16"	B	44	40	30	16.1
49-66-6214	1/2" Drive	Standard	1-1/4"	B	44	43.8	30	16.1
49-66-6215	1/2" Drive	Standard	1-5/16"	B	48	46	32.7	19
49-66-6216	1/2" Drive	Standard	1-3/8"	B	48	48	36	19
49-66-6217	1/2" Drive	Standard	1-7/16"	B	48	50	37	19
49-66-6218	1/2" Drive	Standard	1-1/2"	B	48	52	40	21.5
49-66-6219	1/2" Drive	Standard	1-9/16"	B	48	54	44	21.5
49-66-6240	1/2" Drive	Standard	8mm	B	42	39.8	30	15.4
49-66-6241	1/2" Drive	Standard	9mm	B	42	42	30	16.7
49-66-6242	1/2" Drive	Standard	10mm	B	44	42.8	30.5	16.7
49-66-6243	1/2" Drive	Standard	11mm	B	44	43.8	32.5	17
49-66-6244	1/2" Drive	Standard	12mm	B	44	43.8	32.5	18.3
49-66-6245	1/2" Drive	Standard	13mm	B	44	46.8	32.5	18.1
49-66-6246	1/2" Drive	Standard	14mm	B	48	46.8	35.8	20
49-66-6247	1/2" Drive	Standard	15mm	B	48	49.8	35.8	20
49-66-6248	1/2" Drive	Standard	16mm	B	48	50	36.8	20
49-66-6249	1/2" Drive	Standard	17mm	A	78	17.5	24.8	4
49-66-6250	1/2" Drive	Standard	18mm	A	78	18	24.8	5.2
49-66-6251	1/2" Drive	Standard	19mm	A	78	20	24.8	5.3
49-66-6252	1/2" Drive	Standard	20mm	A	78	22	24.8	6.3
49-66-6253	1/2" Drive	Standard	21mm	A	78	24	24.8	7.1
49-66-6254	1/2" Drive	Standard	22mm	A	78	26	29.8	8.1
49-66-6255	1/2" Drive	Standard	23mm	A	78	28	29.8	9
49-66-6256	1/2" Drive	Standard	24mm	A	78	29.8	29.8	10.6
49-66-6257	1/2" Drive	Standard	25mm	B	78	31.8	30	12.2
49-66-6258	1/2" Drive	Standard	26mm	B	78	33.8	30	12.4
49-66-6259	1/2" Drive	Standard	27mm	B	78	35.8	30	12.4
49-66-6260	1/2" Drive	Standard	28mm	B	78	37.8	30	12.4
49-66-6261	1/2" Drive	Standard	29mm	B	78	39.8	30	16.1
49-66-6262	1/2" Drive	Standard	30mm	B	78	40	30	16.1
49-66-6263	1/2" Drive	Standard	31mm	B	78	43.8	30	16.1
49-66-6264	1/2" Drive	Standard	32mm	B	78	46	32.7	19

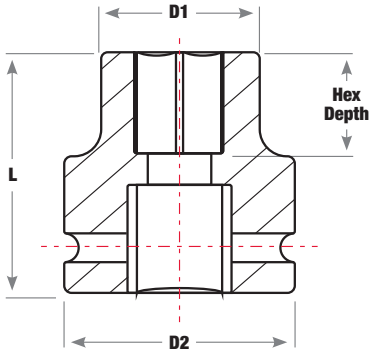

TYPE A

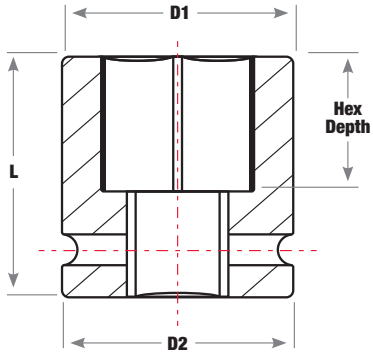

TYPE B

CONTINUED

6 PT STANDARD

SHOCKWAVE Impact Duty™ 1/2" Drive Standard Sockets

Part Number	Description	Depth	Diameter	Type	L	D1	D2	Min Hex Depth
49-66-6265	1/2" Drive	Standard	33mm	B	78	48	36	19
49-66-6266	1/2" Drive	Standard	34mm	B	78	50	37	19
49-66-6267	1/2" Drive	Standard	35mm	B	78	52	40	21.5
49-66-6268	1/2" Drive	Standard	36mm	B	78	54	44	21.5

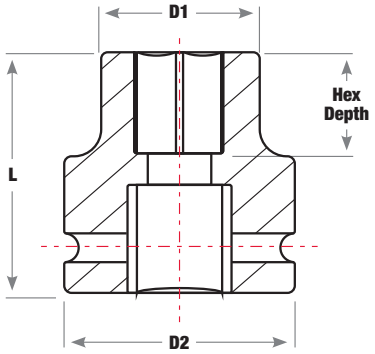

TYPE A

6 PT DEEP

SHOCKWAVE Impact Duty™ 1/2" Drive Deep Sockets

Part Number	Description	Depth	Diameter	Type	L	D1	D2	Min Hex Depth
49-66-6220	1/2" Drive	Deep	3/8"	A	38	15	24.8	4.2
49-66-6221	1/2" Drive	Deep	7/16"	A	38	16.3	24.8	4.1
49-66-6222	1/2" Drive	Deep	1/2"	A	38	17.5	24.8	4.6
49-66-6223	1/2" Drive	Deep	9/16"	A	38	18	24.8	5.5
49-66-6224	1/2" Drive	Deep	5/8"	A	38	19	24.8	6.1
49-66-6225	1/2" Drive	Deep	11/16"	A	38	20	24.8	6.8
49-66-6226	1/2" Drive	Deep	3/4"	A	38	22	24.8	8.4
49-66-6227	1/2" Drive	Deep	13/16"	A	38	23	24.8	8.4
49-66-6228	1/2" Drive	Deep	7/8"	A	38	24	24.8	9.6
49-66-6229	1/2" Drive	Deep	15/16"	A	38	26.2	29.8	9.6
49-66-6230	1/2" Drive	Deep	1"	A	38	27	29.8	10.2
49-66-6231	1/2" Drive	Deep	1-1/16"	A	38	28	29.8	11.1
49-66-6232	1/2" Drive	Deep	1-1/8"	A	38	29.3	29.8	11.5
49-66-6233	1/2" Drive	Deep	1-3/16"	A	38	30	30	11.7
49-66-6234	1/2" Drive	Deep	1-1/4"	B	38	31.8	30	12.5
49-66-6235	1/2" Drive	Deep	1-5/16"	B	40	33.8	30	12.7
49-66-6236	1/2" Drive	Deep	1-3/8"	B	40	34.2	30	13.9
49-66-6237	1/2" Drive	Deep	1-7/16"	B	42	35.8	30	14
49-66-6238	1/2" Drive	Deep	1-1/2"	B	42	37	30	14.6
49-66-6239	1/2" Drive	Deep	1-9/16"	B	42	38.2	30	15.8
49-66-6269	1/2" Drive	Deep	8mm	A	78	15	24.8	4.2
49-66-6270	1/2" Drive	Deep	9mm	A	78	16.3	24.8	4.1
49-66-6271	1/2" Drive	Deep	10mm	A	78	17.5	24.8	4.6
49-66-6272	1/2" Drive	Deep	11mm	A	78	18	24.8	5.5
49-66-6273	1/2" Drive	Deep	12mm	A	78	19	24.8	6.1
49-66-6274	1/2" Drive	Deep	13mm	A	78	20	24.8	6.8
49-66-6275	1/2" Drive	Deep	14mm	A	78	22	24.8	8.4
49-66-6276	1/2" Drive	Deep	15mm	A	78	23	24.8	8.4
49-66-6277	1/2" Drive	Deep	16mm	A	78	24	24.8	9.6
49-66-6278	1/2" Drive	Deep	17mm	A	78	26.2	29.8	9.6
49-66-6279	1/2" Drive	Deep	18mm	A	78	27	29.8	10.2
49-66-6280	1/2" Drive	Deep	19mm	A	78	28	29.8	11.1
49-66-6281	1/2" Drive	Deep	20mm	A	78	29.3	29.8	11.5

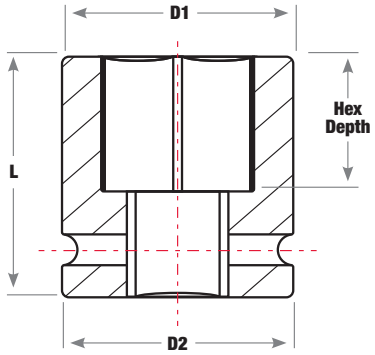

TYPE B

CONTINUED

6 PT DEEP

SHOCKWAVE Impact Duty™ 1/2" Drive Deep Sockets

Part Number	Description	Depth	Diameter	Type	L	D1	D2	Min Hex Depth
49-66-6282	1/2" Drive	Deep	21mm	A	78	30	30	11.7
49-66-6283	1/2" Drive	Deep	22mm	B	78	31.8	30	12.5
49-66-6284	1/2" Drive	Deep	23mm	B	78	33.8	30	12.7
49-66-6285	1/2" Drive	Deep	24mm	B	78	34.2	30	13.9
49-66-6286	1/2" Drive	Deep	25mm	B	78	35.8	30	14
49-66-6287	1/2" Drive	Deep	26mm	B	78	37	30	14.6
49-66-6288	1/2" Drive	Deep	27mm	B	78	38.2	30	15.8
49-66-6289	1/2" Drive	Deep	28mm	B	78	39.8	30	15.4
49-66-6290	1/2" Drive	Deep	29mm	B	78	42	30	16.7
49-66-6291	1/2" Drive	Deep	30mm	B	78	42.8	30.5	16.7

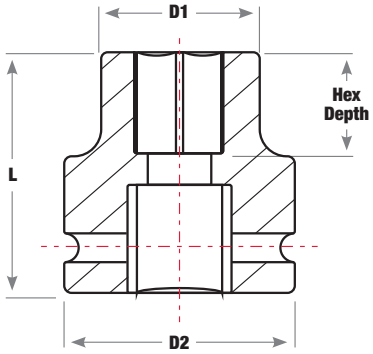

TYPE A

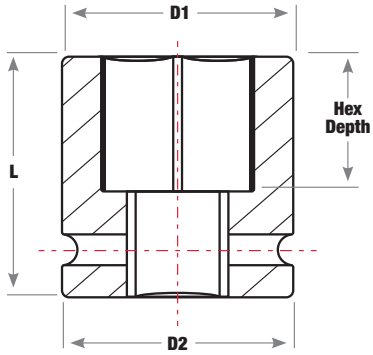

TYPE B

SHOCKWAVE IMPACT DUTY™ SOCKETS

6 PT STANDARD

SHOCKWAVE Impact Duty™ 3/4" Drive Standard Sockets

Part Number	Optional Retaining Ring	Description	Depth	Diameter	Type	L	D1	D2	Min Hex Depth
49-66-6300	49-66-6743	3/4" Drive	Standard	9/16"	A	53	27	41.4	6.3
49-66-6301		3/4" Drive	Standard	5/8"	A	53	29.9	41.4	7.1
49-66-6302		3/4" Drive	Standard	11/16"	A	53	30.7	41.4	8.1
49-66-6303		3/4" Drive	Standard	3/4"	A	53	32	41.4	9
49-66-6304		3/4" Drive	Standard	13/16"	A	53	34.9	41.4	10.6
49-66-6305		3/4" Drive	Standard	7/8"	A	53	36	41.4	12.2
49-66-6306		3/4" Drive	Standard	15/16"	A	53	38	41.4	12.4
49-66-6307		3/4" Drive	Standard	1"	A	53	40	41.4	12.4
49-66-6308	49-66-6744	3/4" Drive	Standard	1-1/16"	A	53	40.5	44.2	12.4
49-66-6309		3/4" Drive	Standard	1-1/8"	B	53	44.2	44.2	16.1
49-66-6310		3/4" Drive	Standard	1.3/16"	B	53	46	44.2	16.1
49-66-6311		3/4" Drive	Standard	1-1/4"	B	53	48	44.2	16.1
49-66-6312		3/4" Drive	Standard	1-5/16"	B	57	51	44.2	18.8
49-66-6313		3/4" Drive	Standard	1-3/8"	B	57	52	44.2	18.8
49-66-6314		3/4" Drive	Standard	1-7/16"	B	57	54.8	44.2	18.8
49-66-6315		3/4" Drive	Standard	1-1/2"	B	57	56	44.2	21.5
49-66-6316		3/4" Drive	Standard	1-9/16"	B	58	58	44.2	21.5
49-66-6317		3/4" Drive	Standard	1-5/8"	B	58	59	44.2	21.5
49-66-6318		3/4" Drive	Standard	1-11/16"	B	58	65	44.2	24.6
49-66-6319		3/4" Drive	Standard	1-3/4"	B	62	65	44.2	24.9
49-66-6320		3/4" Drive	Standard	1-13/16"	B	62	66	44.2	25.1
49-66-6321		3/4" Drive	Standard	1-7/8"	B	65	68	44.2	27
49-66-6322		3/4" Drive	Standard	1-15/16"	B	65	69.8	44.2	27.2
49-66-6323		3/4" Drive	Standard	2"	B	65	72	44.2	27
49-66-6356	49-66-6744	3/4" Drive	Standard	17mm	B	58	63	44.4	25.4
49-66-6357		3/4" Drive	Standard	19mm	B	58	63	44.4	25.4
49-66-6358		3/4" Drive	Standard	20mm	B	62	65	44.4	24.3
49-66-6359		3/4" Drive	Standard	21mm	B	62	65.2	44.4	24.9
49-66-6360		3/4" Drive	Standard	22mm	B	62	66.2	44.4	28.6
49-66-6361		3/4" Drive	Standard	23mm	B	62	68	44.4	26
49-66-6362		3/4" Drive	Standard	24mm	B	65	69	44.4	26.5
49-66-6363		3/4" Drive	Standard	25mm	B	65	72	44.4	27.1
49-66-6364		3/4" Drive	Standard	26mm	B	65	72	44.4	29.8
49-66-6365		3/4" Drive	Standard	27mm	B	70	84	44.4	33.2
49-66-6366		3/4" Drive	Standard	28mm	A	90	27	41.4	6.3
49-66-6367		3/4" Drive	Standard	29mm	A	90	29.9	41.4	7.1
49-66-6368		3/4" Drive	Standard	30mm	A	90	30.7	41.4	8.1
49-66-6369		3/4" Drive	Standard	31mm	A	90	32	41.4	9
49-66-6370		3/4" Drive	Standard	32mm	A	90	34.9	41.4	10.6
49-66-6371		3/4" Drive	Standard	33mm	A	90	35	41.4	12.2
49-66-6372		3/4" Drive	Standard	34mm	A	90	38	41.4	12.4
49-66-6373		3/4" Drive	Standard	35mm	A	90	40	41.4	12.4
49-66-6374		3/4" Drive	Standard	36mm	A	90	40.5	44.2	12.4
49-66-6375		3/4" Drive	Standard	37mm	A	90	44.2	44.2	16.1
49-66-6376		3/4" Drive	Standard	38mm	B	90	46	44.2	16.1

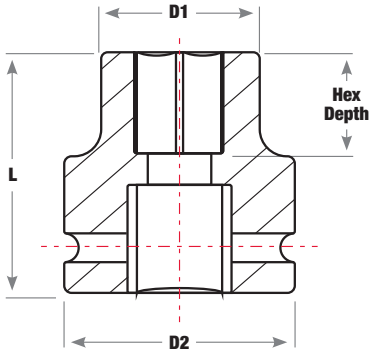

TYPE A

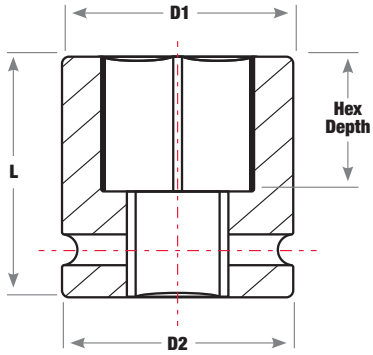

TYPE B

CONTINUED

6 PT STANDARD

SHOCKWAVE Impact Duty™ 3/4" Drive Standard Sockets

Part Number	Optional Retaining Ring	Description	Depth	Diameter	Type	L	D1	D2	Min Hex Depth
49-66-6377	49-66-6744	3/4" Drive	Standard	39mm	B	90	48	44.2	16.1
49-66-6378		3/4" Drive	Standard	40mm	B	90	51	44.2	18.8
49-66-6379		3/4" Drive	Standard	41mm	B	90	52	44.2	18.8
49-66-6380		3/4" Drive	Standard	42mm	B	90	54.8	44.2	18.82
49-66-6381		3/4" Drive	Standard	43mm	B	90	56	44.2	21.5
49-66-6382		3/4" Drive	Standard	44mm	B	90	58	44.2	21.5
49-66-6383		3/4" Drive	Standard	45mm	B	90	59	44.2	21.5
49-66-6384		3/4" Drive	Standard	46mm	B	90	65	44.2	24.6
49-66-6385		3/4" Drive	Standard	47mm	B	90	65	44.2	24.9
49-66-6386		3/4" Drive	Standard	48mm	B	90	66	44.2	25.1
49-66-6387		3/4" Drive	Standard	49mm	B	90	68	44.2	27
49-66-6388		3/4" Drive	Standard	50mm	B	90	69.8	44.2	27.2
49-66-6392		3/4" Drive	Standard	60mm	B	90	72	44.2	27

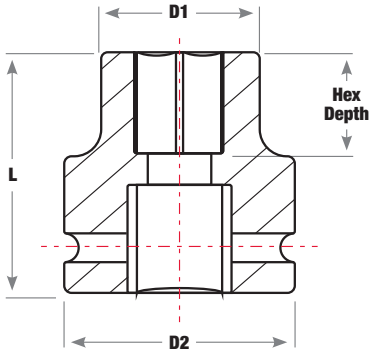

TYPE A

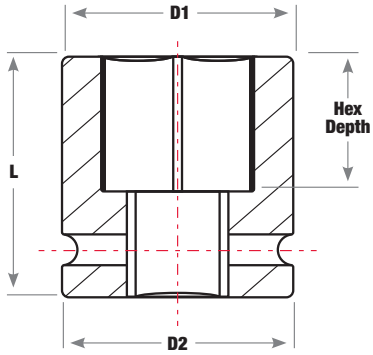

TYPE B

6 PT DEEP

SHOCKWAVE Impact Duty™ 3/4" Drive Deep Sockets

Part Number	Optional Retaining Ring	Description	Depth	Diameter	Type	L	D1	D2	Min Hex Depth
49-66-6332	49-66-6743	3/4" Drive	Deep	9/16"	A	53	30	44	9.6
49-66-6333		3/4" Drive	Deep	5/8"	A	53	33	44	11.1
49-66-6334		3/4" Drive	Deep	11/16"	A	53	34	44	11.5
49-66-6335		3/4" Drive	Deep	3/4"	A	53	35	44	11.7
49-66-6336		3/4" Drive	Deep	13/16"	A	53	36	44	12.5
49-66-6337		3/4" Drive	Deep	7/8"	A	53	37.6	44	12.7
49-66-6338		3/4" Drive	Deep	15/16"	A	53	38	44	13.9
49-66-6339		3/4" Drive	Deep	1"	A	53	40.5	44	14
49-66-6340	49-66-6744	3/4" Drive	Deep	1-1/16"	A	53	40.8	44	14.6
49-66-6341		3/4" Drive	Deep	1-1/8"	A	53	41	44	15.8
49-66-6342		3/4" Drive	Deep	1-3/16"	B	53	45.2	44	16.3
49-66-6343		3/4" Drive	Deep	1-1/4"	B	53	46	44	16.7
49-66-6344		3/4" Drive	Deep	1-5/16"	B	53	46	44	16.7
49-66-6345		3/4" Drive	Deep	1-3/8"	B	53	47	44	17.8
49-66-6346		3/4" Drive	Deep	1-7/16"	B	57	48	44	18.3
49-66-6347		3/4" Drive	Deep	1-1/2"	B	57	50	44	19.1
49-66-6348		3/4" Drive	Deep	1-9/16"	B	57	51	44	20
49-66-6349		3/4" Drive	Deep	1-5/8"	B	57	52	44	20.1
49-66-6350		3/4" Drive	Deep	1-11/16"	B	57	53.5	44	22.3
49-66-6351		3/4" Drive	Deep	1-3/4"	B	57	54.8	44	20.4
49-66-6352		3/4" Drive	Deep	1-13/16"	B	57	58	44	22.3
49-66-6353		3/4" Drive	Deep	1-7/8"	B	57	58	44	21.5
49-66-6354		3/4" Drive	Deep	1-15/16"	B	58	59.5	44	22.8
49-66-6355		3/4" Drive	Deep	2"	B	58	59.5	44.4	24.9

CONTINUED

6 PT DEEP

SHOCKWAVE Impact Duty™ 3/4" Drive Deep Sockets

Part Number	Optional Retaining Ring	Description	Depth	Diameter	Type	L	D1	D2	Min Hex Depth
49-66-6393		3/4" Drive	Deep	17mm	A	90	30	44	9.6
49-66-6394		3/4" Drive	Deep	19mm	A	90	33	44	11.1
49-66-6395		3/4" Drive	Deep	20mm	A	90	34	44	11.5
49-66-6396		3/4" Drive	Deep	21mm	A	90	35	44	11.7
49-66-6397		3/4" Drive	Deep	22mm	A	90	36	44	12.5
49-66-6398		3/4" Drive	Deep	23mm	A	90	37.6	44	12.7
49-66-6399		3/4" Drive	Deep	24mm	A	90	38	44	13.9
49-66-6400		3/4" Drive	Deep	25mm	A	90	40.5	44	14
49-66-6401		3/4" Drive	Deep	26mm	A	90	40.8	44	14.6
49-66-6402		3/4" Drive	Deep	27mm	A	90	41	44	15.8
49-66-6403		3/4" Drive	Deep	28mm	B	90	45.2	44	16.3
49-66-6404		3/4" Drive	Deep	29mm	B	90	46	44	16.7
49-66-6405		3/4" Drive	Deep	30mm	B	90	46	44	16.7
49-66-6406		3/4" Drive	Deep	31mm	B	90	47	44	17.8
49-66-6407		3/4" Drive	Deep	32mm	B	90	48	44	18.3
49-66-6408		3/4" Drive	Deep	33mm	B	90	50	44	19.1
49-66-6409	49-66-6744	3/4" Drive	Deep	34mm	B	90	51	44	20
49-66-6410		3/4" Drive	Deep	35mm	B	90	52	44	20.1
49-66-6411		3/4" Drive	Deep	36mm	B	90	53.5	44	22.3
49-66-6412		3/4" Drive	Deep	37mm	B	90	54.8	44	20.4
49-66-6413		3/4" Drive	Deep	38mm	B	90	58	44	22.3
49-66-6414		3/4" Drive	Deep	39mm	B	90	58	44	21.5
49-66-6415		3/4" Drive	Deep	40mm	B	90	59.5	44	22.8
49-66-6416		3/4" Drive	Deep	41mm	B	90	59.5	44.4	24.9
49-66-6417		3/4" Drive	Deep	42mm	B	90	63	44.4	25.4
49-66-6418		3/4" Drive	Deep	43mm	B	90	63	44.4	25.4
49-66-6419		3/4" Drive	Deep	44mm	B	90	65	44.4	24.3
49-66-6420		3/4" Drive	Deep	45mm	B	90	65.2	44.4	24.9
49-66-6421		3/4" Drive	Deep	46mm	B	90	66.2	44.4	28.6
49-66-6422		3/4" Drive	Deep	47mm	B	90	68	44.4	26
49-66-6423		3/4" Drive	Deep	48mm	B	90	69	44.4	26.5
49-66-6424		3/4" Drive	Deep	49mm	B	90	72	44.4	27.1
49-66-6425		3/4" Drive	Deep	50mm	B	90	72	44.4	29.8

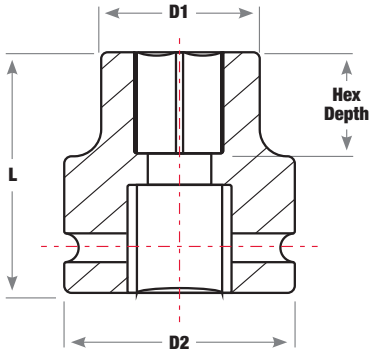

TYPE A

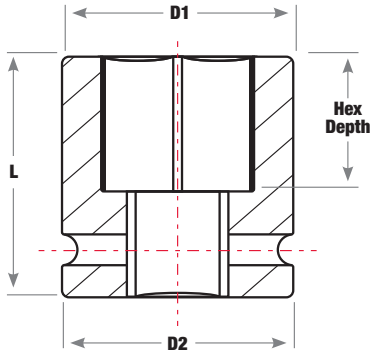

TYPE B

Retaining Rings

Part Number	Drive Size	SAE Range	MM Range	OD	ID
49-66-6743	3/4" Drive	9/16" – 1"	–	45.6	35.7
49-66-6744	3/4" Drive	1-1/16" – 2"	17mm – 60mm	48.5	38.7

SHOCKWAVE IMPACT DUTY™ SOCKETS

6 PT DEEP

SHOCKWAVE Impact Duty™ 1" Drive Deep Sockets

Part Number	Optional Retaining Ring	Description	Depth	Diameter	Type	L	D1	D2	Min Hex Depth
49-66-6502	49-66-6745	1" Drive	Deep	7/8"	A	90	39	54	12.2
49-66-6503		1" Drive	Deep	15/16"	A	90	40	54	12.5
49-66-6504		1" Drive	Deep	1"	A	90	41	54	12.5
49-66-6505		1" Drive	Deep	1-1/16"	A	90	42	54	12.5
49-66-6506		1" Drive	Deep	1-1/8"	A	90	46	54	16.1
49-66-6507		1" Drive	Deep	1-3/16"	A	90	49	54	16.1
49-66-6508		1" Drive	Deep	1-1/4"	A	90	52	54	16.1
49-66-6509		1" Drive	Deep	1-5/16"	A	92	54	54	18.8
49-66-6510		1" Drive	Deep	1-3/8"	A	92	54	54	18.8
49-66-6511		1" Drive	Deep	1-7/16"	B	92	57	54	18.8
49-66-6512		1" Drive	Deep	1-1/2"	B	92	58	54	21.5
49-66-6513		1" Drive	Deep	1-9/16"	B	92	59	54	21.5
49-66-6514		1" Drive	Deep	1-5/8"	B	92	61	54	21.5
49-66-6515		1" Drive	Deep	1-11/16"	B	95	64	54	24.6
49-66-6516	49-66-6746	1" Drive	Deep	1-3/4"	B	95	68	57.1	24.9
49-66-6517		1" Drive	Deep	1-13/16"	B	95	68	57.1	25.2
49-66-6518		1" Drive	Deep	1-7/8"	B	95	69	57.1	27
49-66-6519		1" Drive	Deep	1-15/16"	B	95	71	57.1	27
49-66-6520		1" Drive	Deep	2"	B	95	73	57.1	27
49-66-6521		1" Drive	Deep	2-1/4"	B	100	83	60.3	32.4

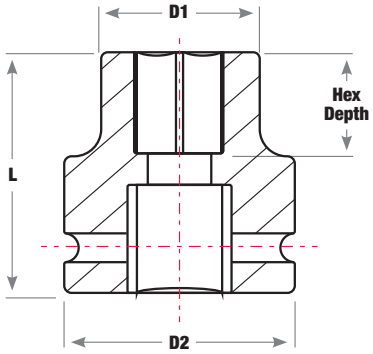

TYPE A

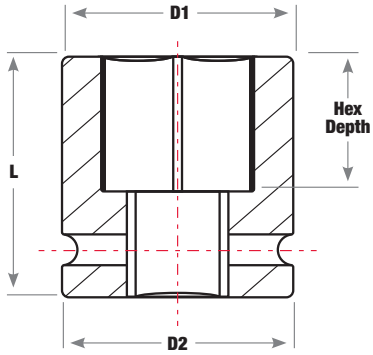

TYPE B

6 PT STANDARD

SHOCKWAVE Impact Duty™ 1" Drive Standard Sockets

Part Number	Optional Retaining Ring	Description	Depth	Diameter	Type	L	D1	D2	Min Hex Depth
49-66-6592	49-66-6745	1" Drive	Standard	27mm	A	58	45.2	54	15.8
49-66-6593		1" Drive	Standard	28mm	A	58	45.2	54	16.3
49-66-6594		1" Drive	Standard	29mm	A	58	48	54	16.7
49-66-6595		1" Drive	Standard	30mm	A	62	49	54	16.7
49-66-6596		1" Drive	Standard	31mm	A	62	51	54	17.8
49-66-6597		1" Drive	Standard	32mm	A	62	52	54	18.3
49-66-6598		1" Drive	Standard	33mm	A	62	54	54	19.1
49-66-6599		1" Drive	Standard	34mm	A	62	54	54	20
49-66-6600		1" Drive	Standard	35mm	A	62	54	54	20.1
49-66-6601		1" Drive	Standard	36mm	B	65	55.3	54	22.3
49-66-6602		1" Drive	Standard	38mm	B	65	58	54	22.3
49-66-6603		1" Drive	Standard	40mm	B	65	60	54	22.8
49-66-6604		1" Drive	Standard	41mm	B	70	61	54	24.9
49-66-6605		1" Drive	Standard	42mm	B	70	64	54	25.4
49-66-6606	49-66-6746	1" Drive	Standard	46mm	B	75	68	58	28.6
49-66-6607		1" Drive	Standard	50mm	B	75	73	58.6	29.8
49-66-6608		1" Drive	Standard	52mm	B	80	75	58.6	29.8
49-66-6609		1" Drive	Standard	54mm	B	80	78	58.6	31

CONTINUED

6 PT STANDARD

SHOCKWAVE Impact Duty™ 1" Drive Standard Sockets

Part Number	Optional Retaining Ring	Description	Depth	Diameter	Type	L	D1	D2	Min Hex Depth
49-66-6610	49-66-6746	1" Drive	Standard	55mm	B	83	82	58.6	33.6
49-66-6611		1" Drive	Standard	56mm	B	83	82	58.6	33.6
49-66-6612		1" Drive	Standard	58mm	B	83	83	58.6	33.6
49-66-6613		1" Drive	Standard	60mm	B	87	86	58.6	35
49-66-6614		1" Drive	Standard	65mm	B	90	92	58.6	35
49-66-6615		1" Drive	Standard	67mm	B	90	93	58.6	35
49-66-6616		1" Drive	Standard	70mm	B	93	97	58.6	35

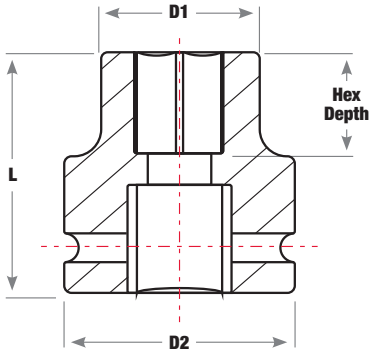

TYPE A

Retaining Rings

Part Number	Drive Size	SAE Range	MM Range	OD	ID
49-66-6745	1" Drive	7/8" – 1-11/16"	27mm – 42mm	56.6	46.9
49-66-6746	1" Drive	1-3/4" – 2-1/4"	46mm – 70mm	62.2	52.5

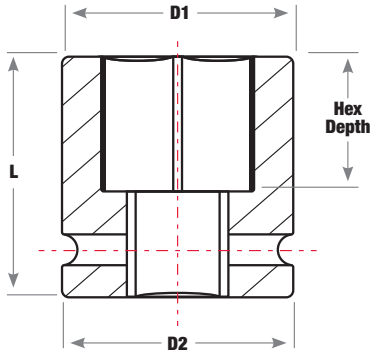

TYPE B