SERVICE PARTS LIST

BULLETIN NO. 54-49-2815

SPECIFY CATALOG NO. AND SERIAL NO. WHEN ORDERING PARTS		REVISED BULLETIN	DATE Jun 2025
M18 FUEL™ QUIK-LOK™ POWER HEAD			
CATALOG NO. 3016-20	**SERIAL NO. N93A and B**	WIRING INSTRUCTION **See Page 15**	

Pg. 1	Power Unit	Pg. 7	Brush Cutter Attachment	Pg. 13	Short Shaft Hedge Trimmer
Pg. 2	Edge Trimmer Attachment	Pg. 8	Rubber Broom Attachment	Pg. 14	Reciprocator Attachment
Pg. 3	String Trimmer Attachment	Pg. 9	Bristle Brush Attachment	Pg. 15	Wiring Diagram
Pg. 4	Hedge Trimmer Attachment	Pg. 10	Cultivator Attachment		
Pg. 5	Pole Saw Attachment	Pg. 11	Blower Attachment		
Pg. 6	Extension Tube Attachment	Pg. 12	Bed Redefiner Attachment		

NOTE: Apply 3.5g of type "J" grease (49-08-4220) to inner sleeve of Drive Shaft Assembly (72).

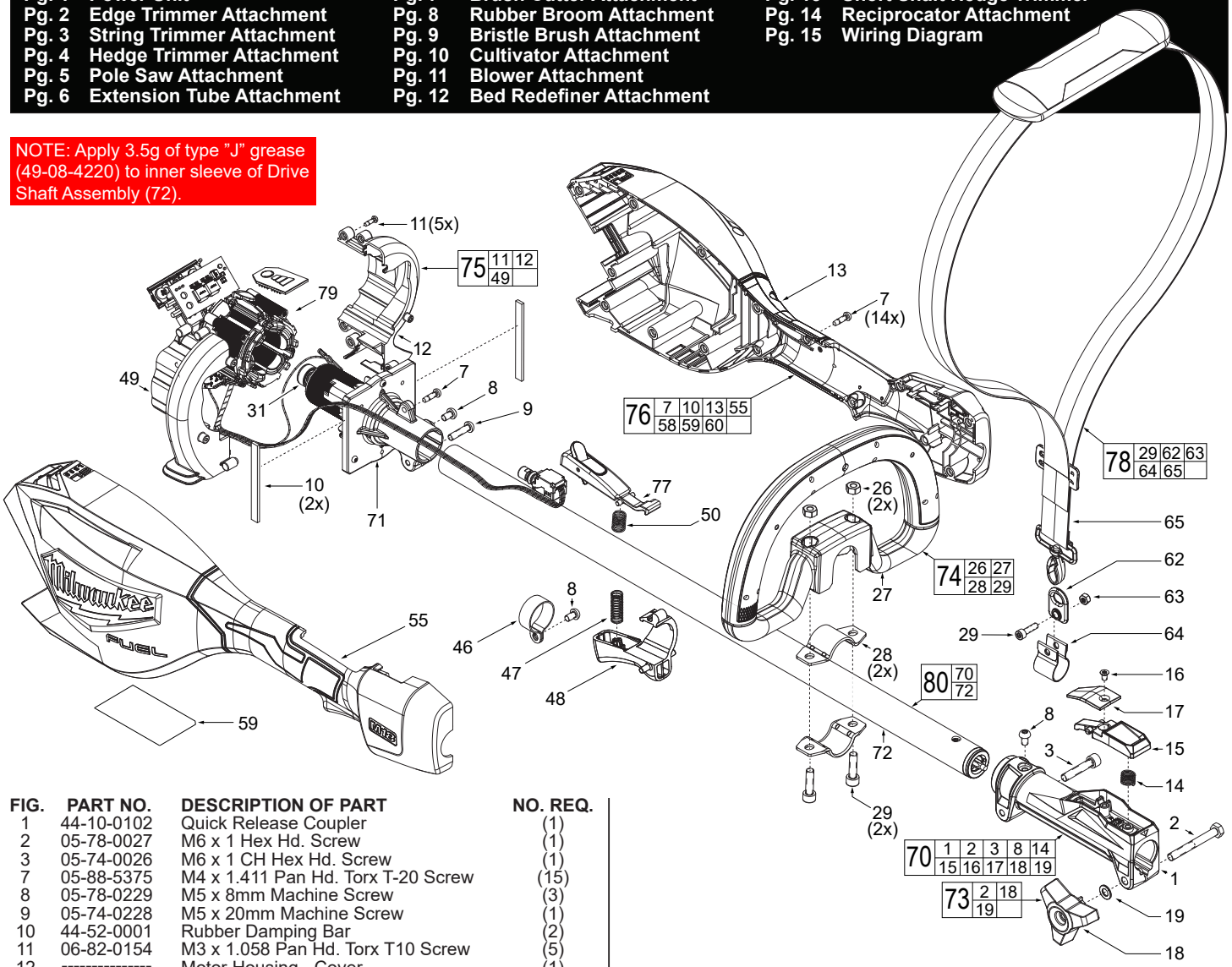

FIG.	PART NO.	DESCRIPTION OF PART	NO. REQ.
1	44-10-0102	Quick Release Coupler	(1)
2	05-78-0027	M6 x 1 Hex Hd. Screw	(1)
3	05-74-0026	M6 x 1 CH Hex Hd. Screw	(1)
7	05-88-5375	M4 x 1.411 Pan Hd. Torx T-20 Screw	(15)
8	05-78-0229	M5 x 8mm Machine Screw	(3)
9	05-74-0228	M5 x 20mm Machine Screw	(1)
10	44-52-0001	Rubber Damping Bar	(2)
11	06-82-0154	M3 x 1.058 Pan Hd. Torx T10 Screw	(5)
12	----------	Motor Housing - Cover	(1)
13	----------	Handle Housing - Cover	(1)
14	40-50-1090	Latch Spring	(1)
15	45-72-0026	Quick Change Trigger	(1)
16	05-81-0592	M4 x 6.5mm Flat Head T-15 Screw	(1)
17	42-92-0206	Trigger Cover	(1)
18	43-98-0103	Clamping Knob	(1)
19	45-88-0011	Washer	(1)
26	05-55-0006	M6 Hex Nut	(2)
27	43-62-0102	Bail Handle	(1)
28	28-28-0053	Bail Handle Plate	(2)
29	05-74-0015	M6 x 1 CH Torx T-30 Screw	(3)
31	----------	Ball Bearings	(1)
46	----------	Tube Clamp	(1)
47	40-50-0374	Trigger Spring	(1)
48	23-66-0236	Trigger	(1)
49	----------	Motor Housing - Support	(1)
50	40-50-0254	Lock-off Spring	(1)
55	----------	Handle Housing - Support	(1)
58	10-22-0675	Warning Label (Not Shown)	(1)
59	12-20-0288	Service Nameplate	(1)
60	10-22-0676	Warning Label (Not Shown)	(1)
62	44-66-0039	Shoulder Strap Mounting Plate	(1)
63	06-57-0625	M6 Lock Nut	(1)
64	45-56-0011	Shoulder Strap Mounting Band	(1)
65	----------	Shoulder Strap	(1)
70	42-90-0112	Quick Release Coupler Service Kit	(1)
71	23-40-0019	Rotor/Motor Mount Assembly	(1)
72	45-08-0073	Drive Shaft Assembly	(1)

FIG.	PART NO.	DESCRIPTION OF PART	NO. REQ.
73	42-98-0116	Coupler Knob Service Kit	(1)
74	31-44-0253	Carrier Handle Service Kit	(1)
75	28-50-0072	Motor Housing Service Kit	(1)
76	28-14-0116	Handle Housing Service Kit	(1)
77	45-72-0037	Lock-Off Trigger Assembly	(1)
78	45-56-0012	Shoulder Strap Service Kit	(1)
79	14-20-0299	Electronics Assembly	(1)
80	44-84-0052	Drive Shaft/Quick Release Service Kit	(1)

SCREW TORQUE SPECIFICATIONS

FIG.	PART NO.	WHERE USED	SEAT TORQUE (kgf-cm)	SEAT TORQUE (lb-in)
3	05-74-0026	Quick Release Coupler	45-50	39-43
7	05-88-5375	Ground Wire	8-10	7-9
		Handle Housing	11-13	10-11
8	05-78-0229	Motor Mount	24-26	21-23
9	05-74-0228	Motor Mount	24-26	21-23
11	06-82-0154	Motor Housing	6-8	5-7
16	05-81-0592	Quick Release Coupler	8-10	7-9
29	05-74-0015	Bail Handlle	25-28	21-23

MILWAUKEE TOOL • www.milwaukeetool.com
13135 W. LISBON RD., BROOKFIELD, WI 53005

SCREW TORQUE SPECIFICATIONS				
			SEAT TORQUE	
FIG.	PART NO.	WHERE USED	(kgf-cm)	(lb-in)
1	45-04-0016	Gearbox	25-28	21-24
6	05-78-0029	Edger A Guard	25-30	21-26
12	05-78-0033	Gearbox	32-38	27-33

No. 49-16-2718

Edge Trimmer Attachment

Serial No. K51A

FIG.	PART NO.	DESCRIPTION OF PART	NO. REQ.
1	45-04-0016	M8 x 15mm Hex Head LH Machine Screw	(1)
2	43-34-2718	Blade Flange	(1)
3	42-26-2718	Edger Blade	(1)
4	43-78-0031	Edger Blade Mounting Hub	(1)
6	05-78-0029	M5 x 8mm Pan Hd. T-25 Machine Screw	(5)
7	05-78-0032	M5 x 13mm Pan Hd. T-25 Machine Screw	(4)
8	44-66-0038	Edger Skid Plate	(1)
9	43-54-0016	Edger A Guard	(1)
10	43-54-0018	Flexible Rear Guard	(1)
11	14-29-0033	Gearbox Assembly	(1)
12	05-78-0033	M5 x 20mm Pan Hd. T-25 Machine Screw	(2)
13	42-40-0013	Sleeve Bushing	(1)
14	45-94-0017	Edger Wheel	(1)
15	45-88-0077	Flat Washer	(1)
16	05-90-0016	Split Ring Lock washer	(1)
17	43-98-0027	Clamping Knob	(1)
18	06-10-0012	M6 x 65mm Square Neck Carriage Bolt	(1)
19	42-36-0074	Edger Wheel Bracket	(1)
25	49-96-0182	Wrench	(1)
30	45-08-0027	Drive Shaft Assembly (For Edge Trimmer)	(1)
	10-20-1782	Warning Label (Not Shown)	(1)
	12-20-0157	Service Nameplate (Not Shown)	(1)

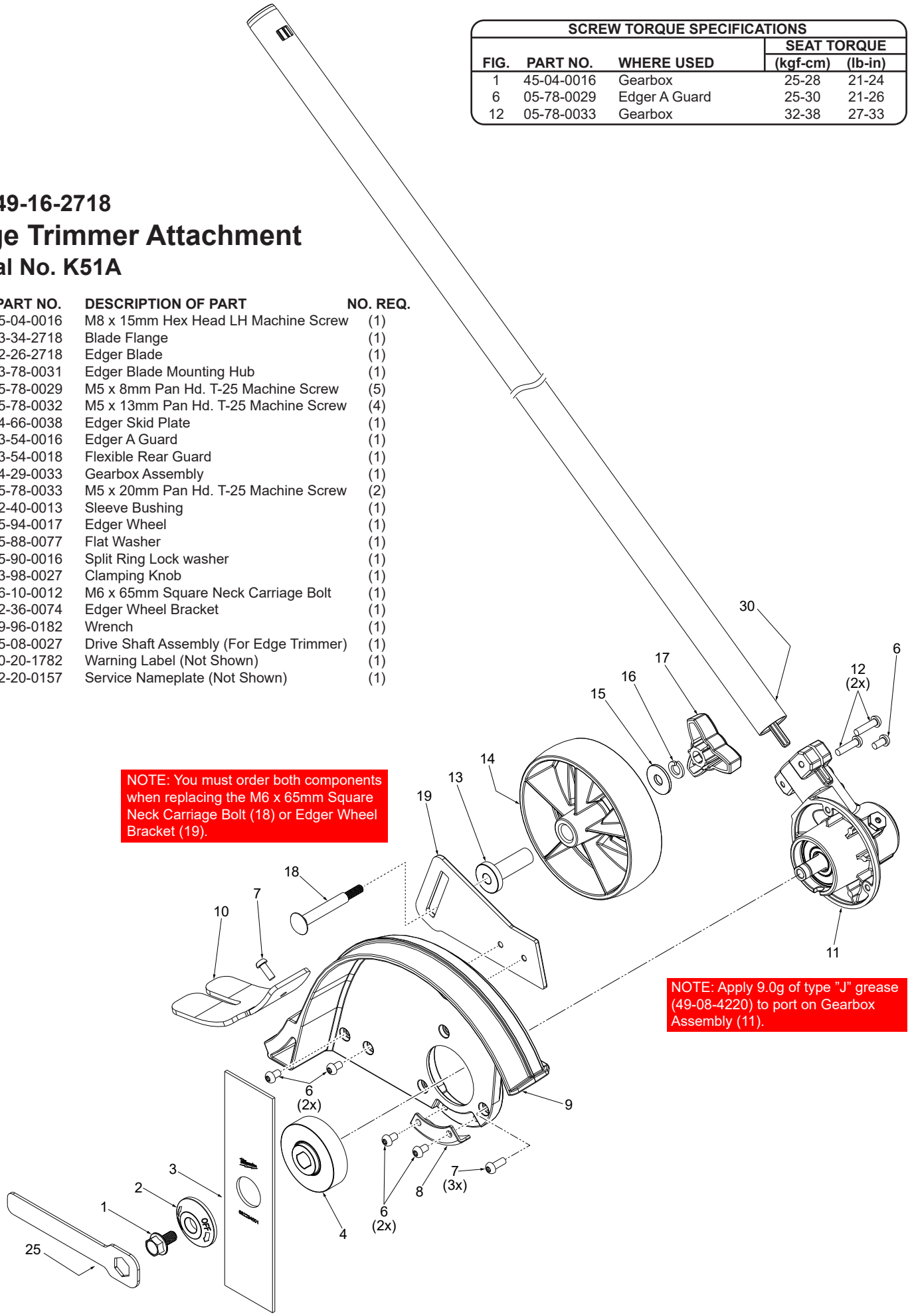

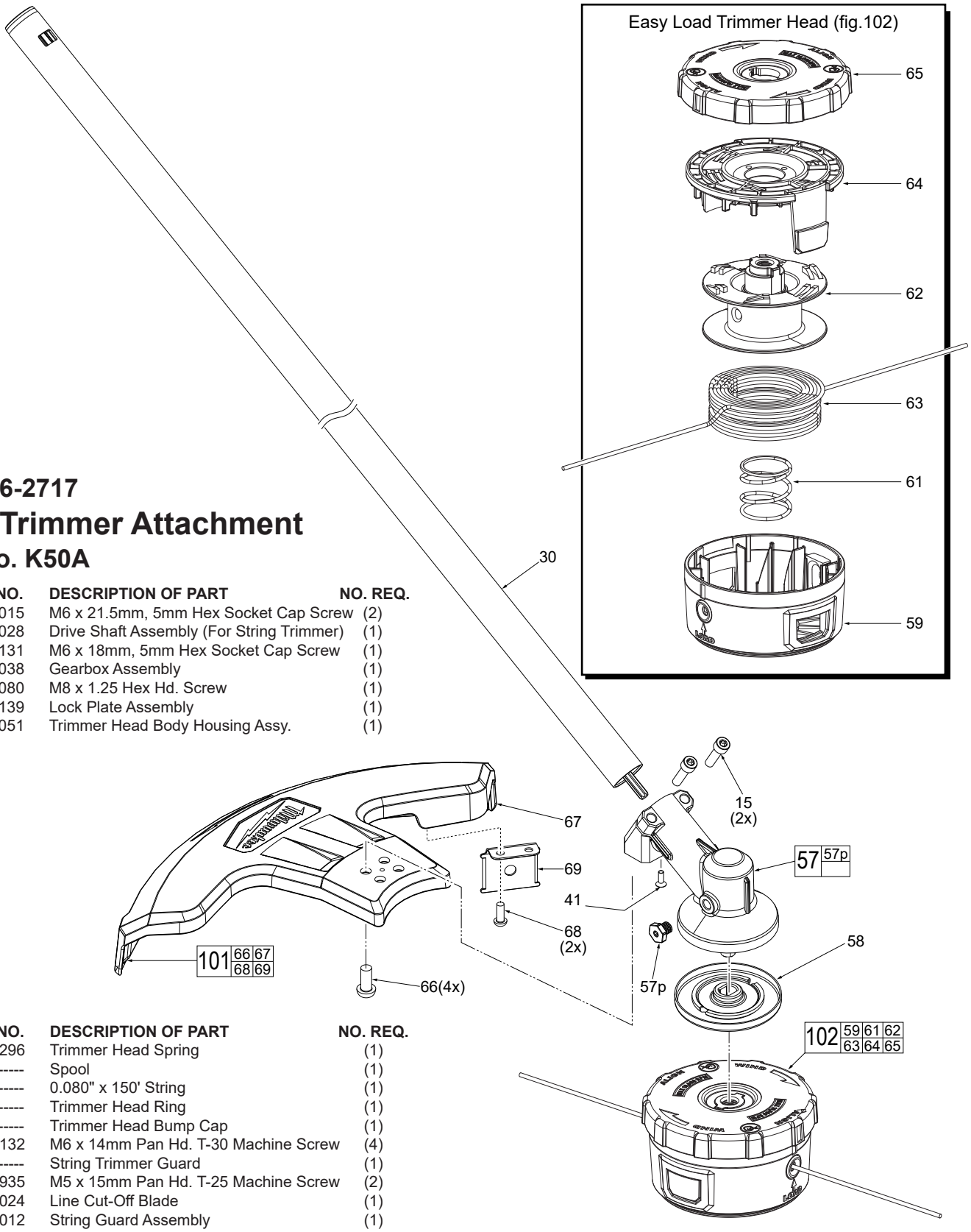

No. 49-16-2717

String Trimmer Attachment

Serial No. K50A

FIG.	PART NO.	DESCRIPTION OF PART	NO. REQ.
15	05-74-0015	M6 x 21.5mm, 5mm Hex Socket Cap Screw	(2)
30	45-08-0028	Drive Shaft Assembly (For String Trimmer)	(1)
41	05-81-0131	M6 x 18mm, 5mm Hex Socket Cap Screw	(1)
57	14-29-0038	Gearbox Assembly	(1)
57p	05-85-0080	M8 x 1.25 Hex Hd. Screw	(1)
58	44-66-0139	Lock Plate Assembly	(1)
59	42-30-0051	Trimmer Head Body Housing Assy.	(1)

FIG.	PART NO.	DESCRIPTION OF PART	NO. REQ.
61	40-50-0296	Trimmer Head Spring	(1)
62	----------	Spool	(1)
63	----------	0.080" x 150' String	(1)
64	----------	Trimmer Head Ring	(1)
65	----------	Trimmer Head Bump Cap	(1)
66	05-81-0132	M6 x 14mm Pan Hd. T-30 Machine Screw	(4)
67	----------	String Trimmer Guard	(1)
68	05-74-0935	M5 x 15mm Pan Hd. T-25 Machine Screw	(2)
69	42-26-0024	Line Cut-Off Blade	(1)
101	14-32-0012	String Guard Assembly	(1)
102	49-16-2748	Easy Load Trimmer Head	(1)
	10-20-1781	Warning Label (Not Shown)	(1)
	12-20-0157	Service Nameplate (Not Shown)	(1)

SCREW TORQUE SPECIFICATIONS				
			SEAT TORQUE	
FIG.	PART NO.	WHERE USED	(kgf-cm)	(lb-in)
15	45-04-0016	Gearbox	32-38	27-33

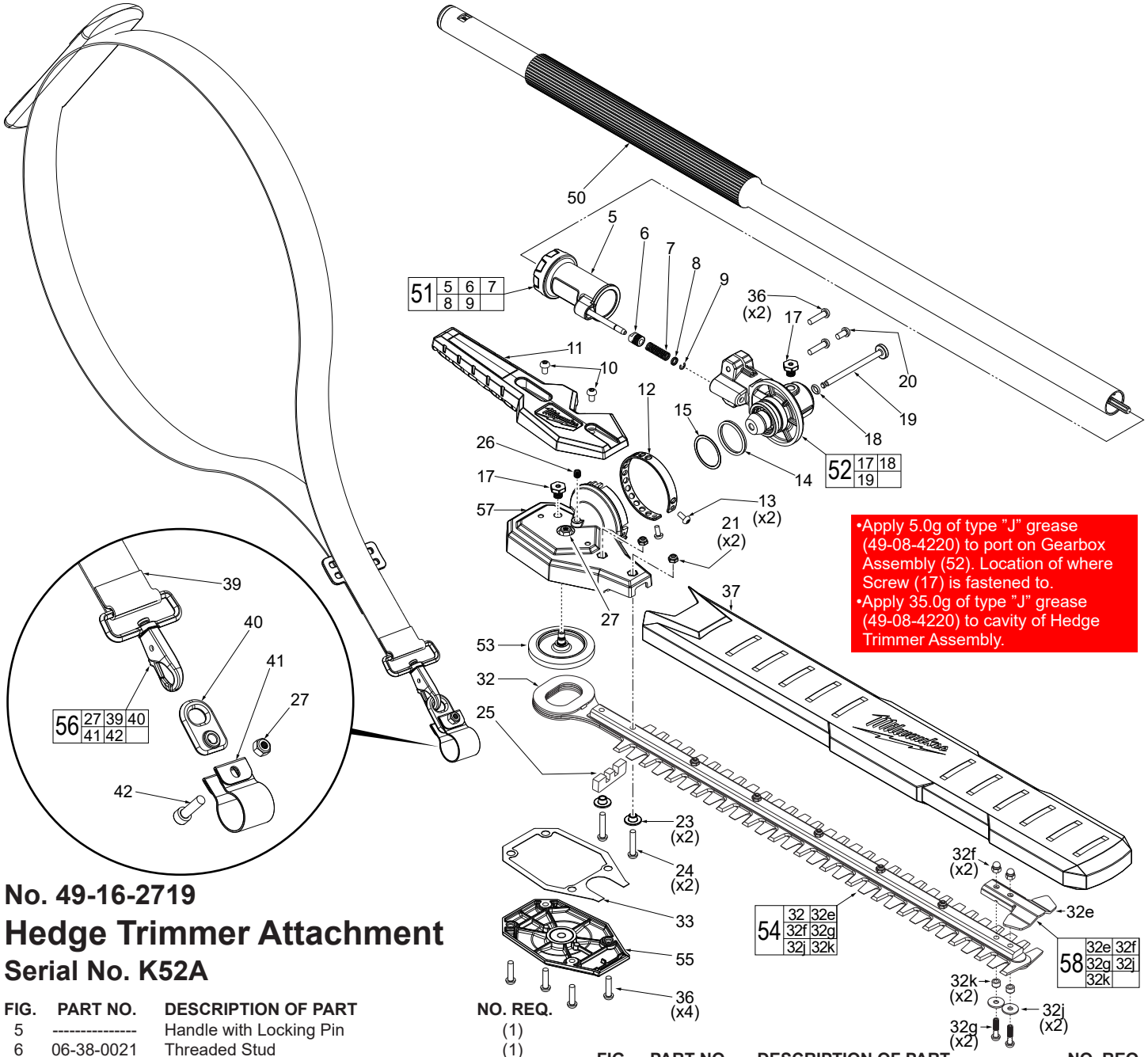

No. 49-16-2719

Hedge Trimmer Attachment

Serial No. K52A

FIG.	PART NO.	DESCRIPTION OF PART	NO. REQ.
5	----------	Handle with Locking Pin	(1)
6	06-38-0021	Threaded Stud	(1)
7	40-50-0114	Lock Pin Spring	(1)
8	45-88-0078	Flat Washer	(1)
9	34-60-0023	C Retaining Ring	(1)
10	05-78-0029	M5 x 8mm Pan Hd. T-25 Machine Screw	(2)
11	31-44-0127	Hedge Trimmer Handle	(1)
12	42-16-0011	Detent Band	(1)
13	05-78-0038	M4 x 7mm Pan Hd. T-20 Machine Screw	(2)
14	34-40-0126	O-Ring	(1)
15	45-88-0079	Flat Washer	(1)
17	05-85-0080	M8 x 1.25 Hex Hd. Screw	(2)
18	34-40-4002	O-Ring	(1)
19	44-60-0069	Gear Alignment Pin	(1)
20	05-78-0024	M5 x 10mm Pan Hd. T-25 Machine Screw	(1)
21	05-55-0019	M5 Nylon Hex Nut	(2)
23	42-40-0123	Bushing	(2)
24	05-78-0019	M5 x 26mm Pan Hd. T-25 Machine Screw	(2)
25	45-06-0016	Felt Seal	(1)
26	06-83-0017	M6 x 8mm Cone Point Set Screw	(1)
27	06-57-0625	M5 Nylon Insert Hex Nut	(2)
32	----------	Blade	(1)
32e	----------	Tip Guard	(1)
32f	----------	M5 Acorn Nut	(2)
32g	----------	M5 Pan Hd. Screw	(2)
32j	----------	Washer	(2)
32k	----------	Bushing	(2)
33	43-44-0026	Gasket	(1)

FIG.	PART NO.	DESCRIPTION OF PART	NO. REQ.
36	05-78-0033	M5 x 20mm Pan Hd. T-25 Machine Screw	(6)
37	49-62-0011	Blade Sheath	(1)
39	----------	Shoulder Strap	(1)
40	44-66-0039	Shoulder Strap Mounting plate	(1)
41	45-56-0011	Shoulder Strap Mounting Band	(1)
42	05-74-0015	M6 x 21.5mm Cap Hd. T-30 Machine Screw	(1)
50	45-08-0023	Drive Shaft Assembly (For Hedge Trimmer)	(1)
51	14-34-0011	Handle Assembly with Locking Pin	(1)
52	14-29-0014	Gearbox Assembly	(1)
53	14-29-0015	Gear/Crankshaft Assembly	(1)
54	42-26-0016	Blade Assembly	(1)
55	31-15-0067	Gearbox Cover with Ball Bearing	(1)
56	45-56-0012	Shoulder Strap Assembly	(1)
57	43-76-2719	Hedge Trimmer Housing Assembly	(1)
58	14-46-6784	Blade Tip Guard Kit	(1)
	10-20-1783	Warning Label (Not Shown)	(1)
	12-20-0157	Service Nameplate (Not Shown)	(1)

SCREW TORQUE SPECIFICATIONS

FIG.	PART NO.	WHERE USED	SEAT TORQUE (kgf-cm)	SEAT TORQUE (lb-in)
20	05-78-0024	Gearbox	27-33	23-28
24	05-78-0019	Hedge Trimmer Housing	55-65	47-56
26	06-83-0017	Hedge Trimmer Housing	15-19	13-16
27	06-57-0625	Hedge Trimmer Housing	21-26	18-22
36	05-78-0033	Hedge Trimmer Housing	32-38	27-33

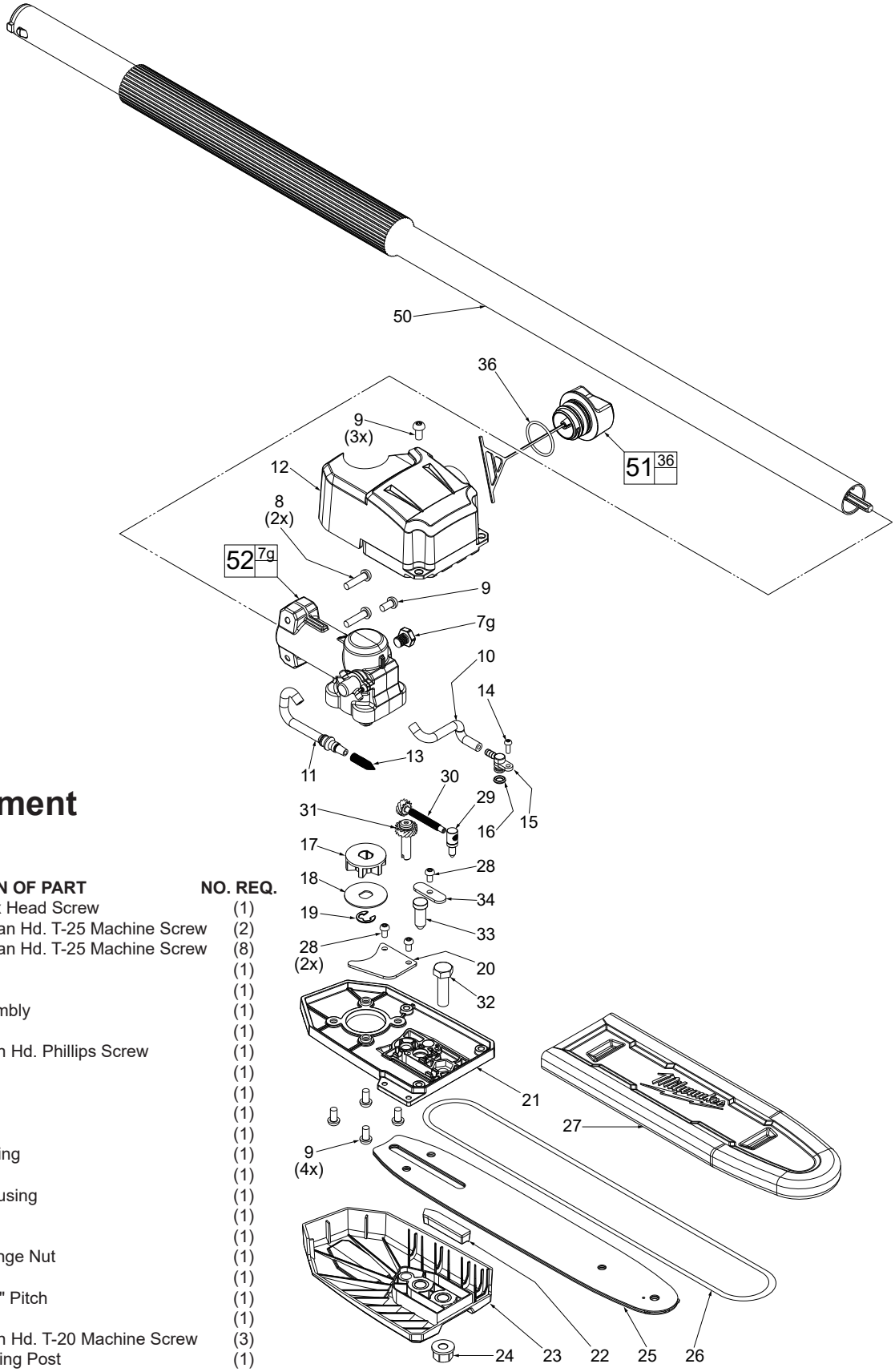

No. 49-16-2720

Pole Saw Attachment

Serial No. K53A

FIG.	PART NO.	DESCRIPTION OF PART	NO. REQ.
7g	05-85-0080	M8 x 1.25 Hex Head Screw	(1)
8	05-78-0033	M5 x 20mm Pan Hd. T-25 Machine Screw	(2)
9	05-78-0024	M5 x 10mm Pan Hd. T-25 Machine Screw	(8)
10	45-36-0016	Outlet Tube	(1)
11	45-76-0011	Inlet Tube	(1)
12	45-66-0013	Oil Tank Assembly	(1)
13	40-50-9220	Cone Spring	(1)
14	05-81-0015	M3 x 6mm Pan Hd. Phillips Screw	(1)
15	42-86-0012	Connector	(1)
16	34-40-4002	O-Ring	(1)
17	45-44-0010	Sprocket	(1)
18	45-88-7001	Chain Washer	(1)
19	42-70-5268	Retaining E-Ring	(1)
20	43-74-0011	Hook	(1)
21	42-92-0057	Bar Mount Housing	(1)
22	43-84-0013	Insert Block	(1)
23	43-72-0014	Bar Holder	(1)
24	05-55-5001	13mm M8 Flange Nut	(1)
25	48-09-5001	10" Bar	(1)
26	49-16-2723	10" Chain, 3/8" Pitch	(1)
27	49-62-0015	Scabbard	(1)
28	05-78-0038	M4 x 7mm Pan Hd. T-20 Machine Screw	(3)
29	05-89-0017	Chain Tensioning Post	(1)
30	05-89-0018	Chain Tensioner Main Screw	(1)
31	05-81-9001	Chain Tensioner Adjustment Screw	(1)
32	05-85-0012	M8 x 28mm Hex Head Machine Screw	(1)
33	44-50-0015	Locating Pin	(1)
34	44-66-0089	Plate	(1)
36	34-40-9002	Oil Cap O-Ring	(1)
50	45-08-0029	Drive Shaft Assembly (For Pole Saw)	(1)
51	42-52-3001	Oil Cap Assembly	(1)
52	14-29-0016	Gearbox Assembly	(1)
	10-20-1784	Warning Label (Not Shown)	(1)
	12-20-0157	Service Nameplate (Not Shown)	(1)

SCREW TORQUE SPECIFICATIONS

FIG.	PART NO.	WHERE USED	SEAT TORQUE (kgf-cm)	SEAT TORQUE (lb-in)
8	05-78-0033	Gearbox	32-38	27-33
9	05-78-0024	Bar Mount Housing	25-30	21-26

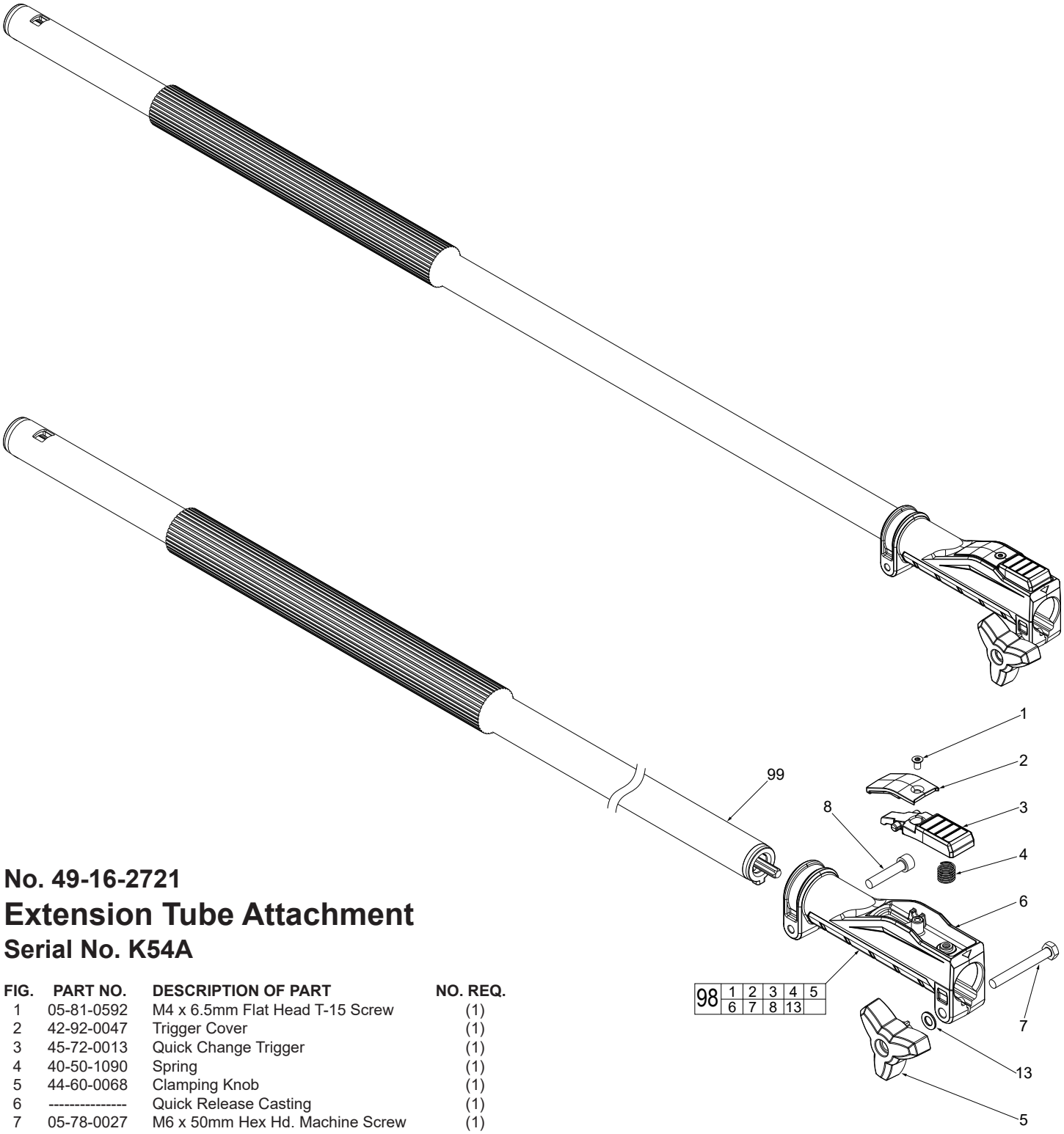

No. 49-16-2721

Extension Tube Attachment

Serial No. K54A

FIG.	PART NO.	DESCRIPTION OF PART	NO. REQ.
1	05-81-0592	M4 x 6.5mm Flat Head T-15 Screw	(1)
2	42-92-0047	Trigger Cover	(1)
3	45-72-0013	Quick Change Trigger	(1)
4	40-50-1090	Spring	(1)
5	44-60-0068	Clamping Knob	(1)
6	----------	Quick Release Casting	(1)
7	05-78-0027	M6 x 50mm Hex Hd. Machine Screw	(1)
8	05-74-0026	M6 x 30mm Cap Hd. Hex Socket Screw	(1)
13	45-88-0011	Flat Washer	(1)
98	14-02-0010	Quick Release Assembly	(1)
99	45-08-0033	Drive Shaft Assembly (For Extension)	(1)
	12-20-0157	Service Nameplate (Not Shown)	(1)

SCREW TORQUE SPECIFICATIONS

FIG.	PART NO.	WHERE USED	SEAT TORQUE (kgf-cm)	SEAT TORQUE (lb-in)
8	05-78-0033	Quick Release Assembly	45-50	39-43

No. 49-16-2738

Brush Cutter Attachment

Serial No. M91A and B

FIG.	PART NO.	DESCRIPTION OF PART	NO. REQ.
1	05-74-0313	Flange Nut (Left Hand Thread)	(1)
2	31-10-0019	Mount with Washer Assembly	(1)
3	49-16-2757	Brush Cutter Blade (Accessory)	(1)
4	44-66-0149	Lock Plate Assembly	(1)
5	05-81-0132	M6 x 14mm Pan Hd. T-30 Machine Screw	(4)
6	05-81-0131	M6 x 17.8mm Flat Hd. Hex Machine Screw	(1)
7	14-29-0038	Gearbox Assembly	(1)
8	05-74-0015	M6 x 21.5mm Cap Hd. T-30 Machine Screw	(2)
18	----------	Drive Shaft (For Brush Cutter)	(1)
19	43-54-0022	Blade Guard Kit	(1)
20	42-34-0016	Brush Cutter Barrier Guard	(1)
22	45-96-0030	Wrench	(1)
23	05-85-0080	M8 x 1.25 Hex Hd. Screw	(1)
24	----------	Shoulder Strap	(1)
27	06-57-0625	M5 Nylon Insert Hex Nut	(2)
30	45-56-0012	Shoulder Strap Assembly	(1)
35	44-60-0144	Head Removal Pin	(1)
40	44-66-0039	Shoulder Strap Mounting Plate	(1)
41	45-56-0011	Shoulder Strap Mounting Band	(1)
42	05-74-0015	M6 x 21.5mm Cap Hd. T-30 Machine Screw	(1)
43	12-20-0511	Service Nameplate (Not Shown)	(1)
44	10-20-8994	Long Warning Label-Brush Cutter (Not Shown)	(1)
45	10-20-8995	Warning Label (Not Shown)	(1)
46	38-50-0093	Drive Shaft Assembly (For Brush Cutter)	(1)
47	42-92-0175	Brush Cutter Cover	(1)
48	06-82-0073	M6 x 36mm Pan Hd. T-30 B Mach. Screw	(2)

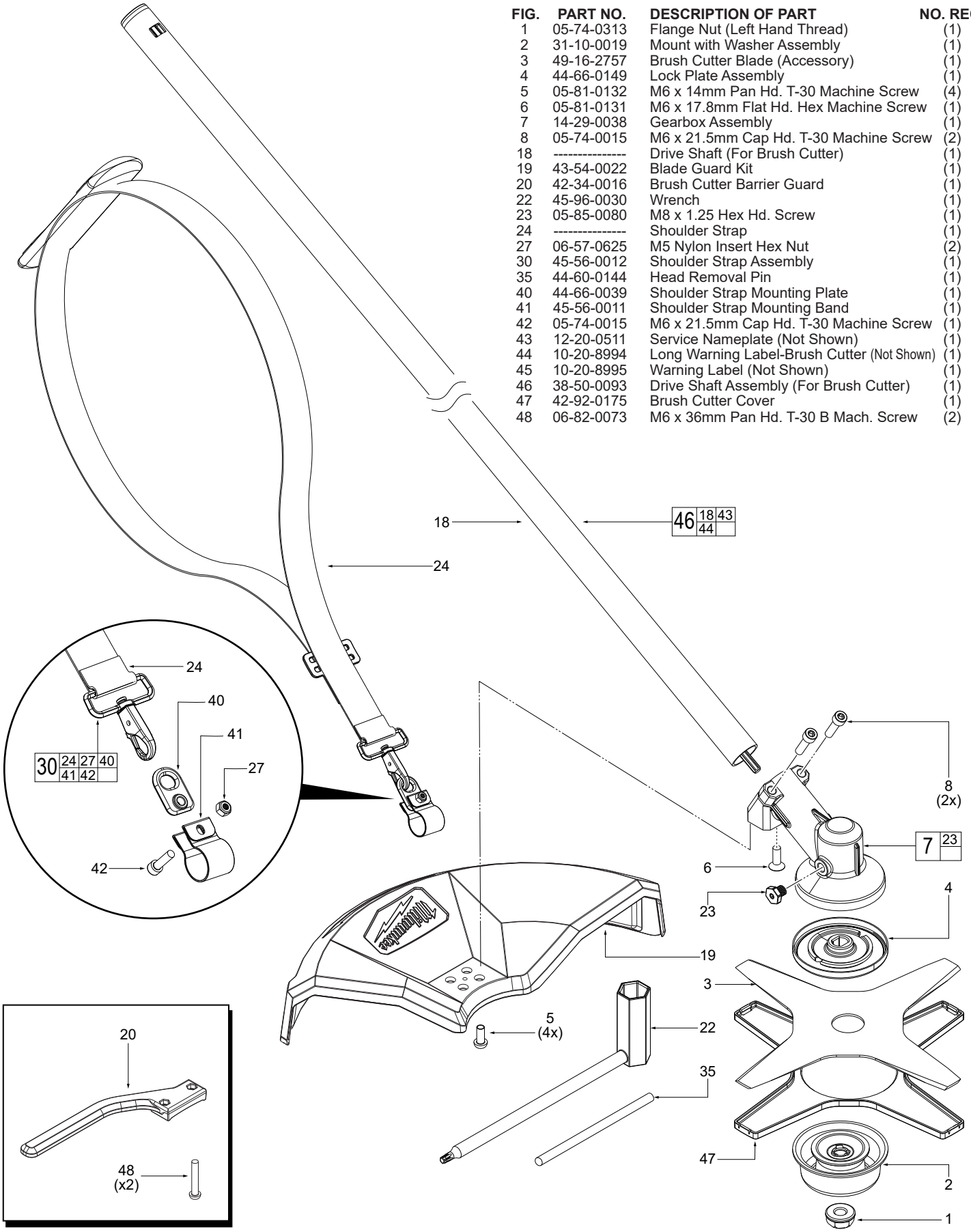

No. 49-16-2740

Rubber Broom Attachment

Serial No. M92A

FIG.	PART NO.	DESCRIPTION OF PART	NO. REQ.
10	----------	Gearbox	(1)
11	05-78-0029	M5 x 8mm Pan Hd. T-25 Machine Screw	(1)
12	05-74-0315	M5 x 17mm Pan Hd. T-25 Machine Screw	(2)
13	42-76-0053	Collar	(1)
14	05-88-0051	M6 x 30mm Cap Hd. Hex Recess Mach. Screw	(1)
15	05-55-0052	10mm M6 Hex Nut	(1)
16	----------	Shield	(1)
17	06-65-0121	'L' Pin	(2)
18	06-65-0122	Hair Pin Cotter Pin	(2)
19	42-12-0026	Output Shaft Axle	(2)
25	31-92-0027	Sweeper Paddle Assembly (Set of 1)	(2)
26	----------	Drive Shaft (Rubber Broom)	(1)
27	42-38-0036	Shield Assembly	(1)
28	14-29-0024	Gearbox Assembly	(1)
29	12-20-0511	Service Nameplate (Not Shown)	(1)
30	10-20-8996	Long Warning Label-Rubber Broom (Not Shown)	(1)
31	38-50-0096	Drive Shaft Assembly (Rubber Broom)	(1)
32	49-96-0012	5mm Hex Key	(1)

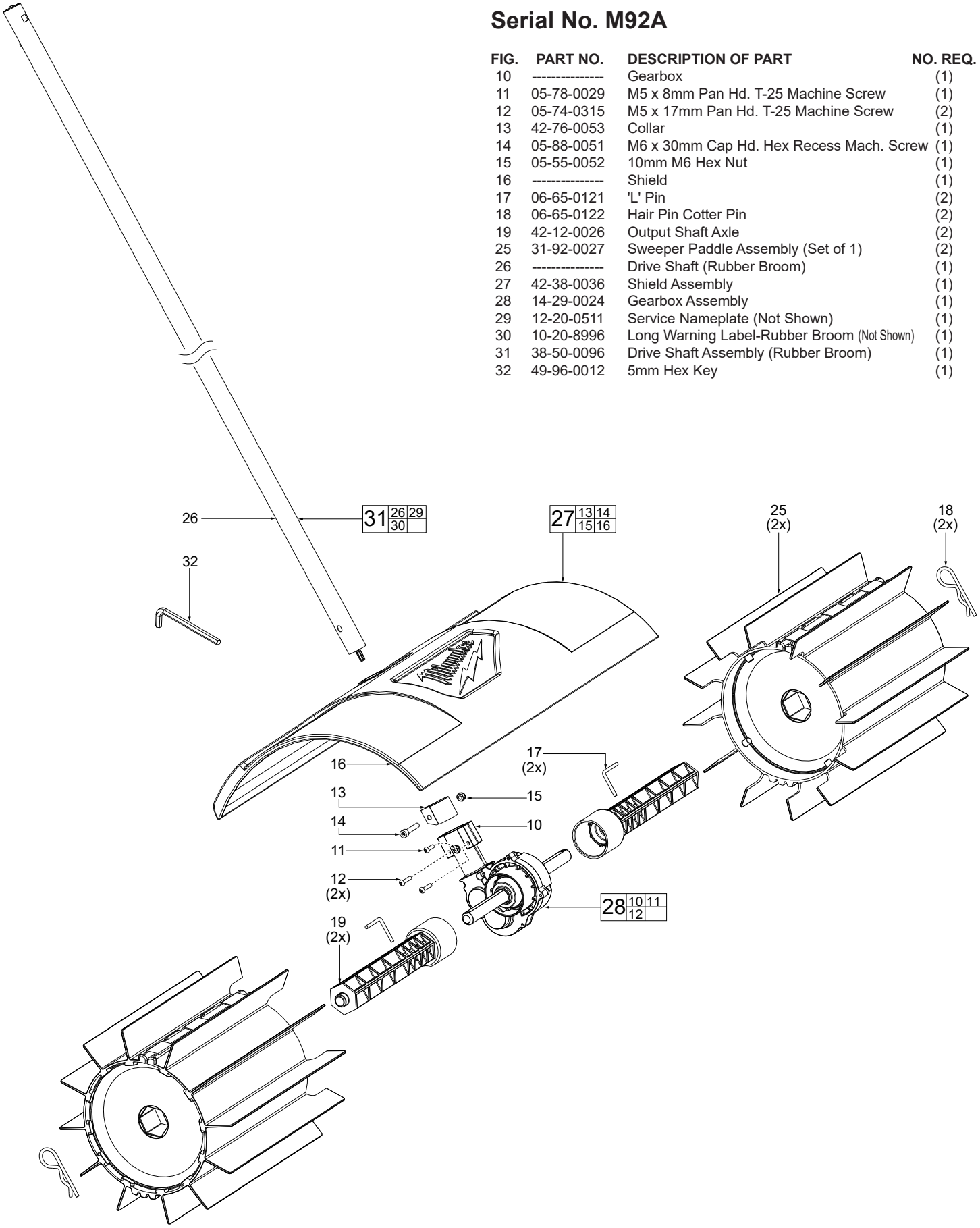

No. 49-16-2741

Bristle Brush Attachment

Serial No. M93A

FIG.	PART NO.	DESCRIPTION OF PART	NO. REQ.
10	----------	Gearbox	(1)
11	05-78-0029	M5 x 8mm Pan Hd. T-25 Machine Screw	(1)
12	05-74-0315	M5 x 17mm Pan Hd. T-25 Machine Screw	(2)
13	42-76-0053	Collar	(1)
14	05-88-0051	M6 x 30mm Cap Hd. Hex Recess Mach. Scr.	(1)
15	05-55-0052	10mm M6 Hex Nut	(1)
16	----------	Shield	(1)
17	06-65-0121	'L' Pin	(2)
18	06-65-0122	Hair Pin Cotter Pin	(2)
19	42-12-0026	Output Shaft Axle	(2)
25	14-46-0349	Bristle Brush Assembly (Set of 1)	(2)
26	----------	Drive Shaft (Bristle Brush)	(1)
27	42-38-0036	Shield Assembly	(1)
28	14-29-0024	Gearbox Assembly	(1)
29	12-20-0511	Service Nameplate (Not Shown)	(1)
30	10-20-8997	Long Warning Label-Bristle Brush (Not Shown)	(1)
31	38-50-0097	Drive Shaft Assembly (Bristle Brush)	(1)
32	49-96-0012	5mm Hex Key	(1)

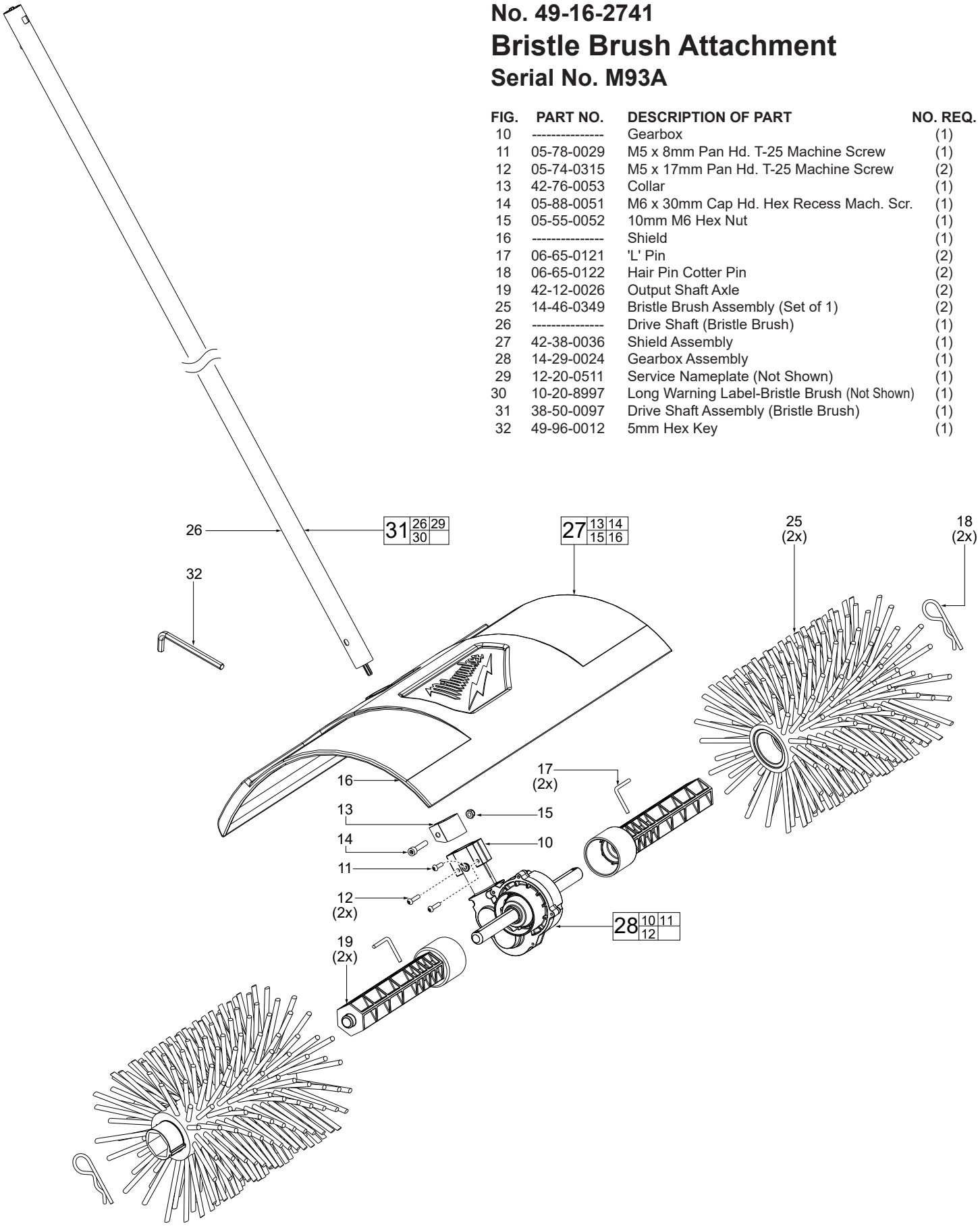

No. 49-16-2739
Cultivator Attachment
Serial No. K68A

FIG.	PART NO.	DESCRIPTION OF PART	NO. REQ.
14	05-88-0051	M6 x 30mm Cap Hd. Hex Recess Mach. Screw	(1)
15	05-55-0042	Cultivator Clamping Plate	(1)
16	42-76-0106	Collar	(1)
17	----------	Cultivator Shield	(1)
18	06-65-0077	Cotter Pin	(2)
19	05-74-0228	M5 x 20mm Machine Screw	(2)
20	05-78-0229	M5 x 8mm Machine Screw	(1)
21	14-46-0713	Gear Box Assembly	(1)
29	14-46-0708	Cultivator -Left Inner Blade Assembly-L1	(1)
30	14-46-0709	Cultivator -Left Outer Blade Assembly-L2	(1)
31	14-46-0711	Cultivator -Right Inner Blade Assembly-R1	(1)
32	14-46-0712	Cultivator -Right Outer Blade Assembly-R2	(1)
33	14-46-0707	Cultivator - Shield Kit	(1)
34	14-46-0706	Cultivator - Tube Kit	(1)
36	06-42-0010	Coupler Key	(1)
37	31-86-0020	Cultivator Square Shield Spacer	(1)
38	10-22-0076	Warning Label (Not Shown)	(1)
40	12-20-0307	Service Nameplate (Not Shown)	(1)

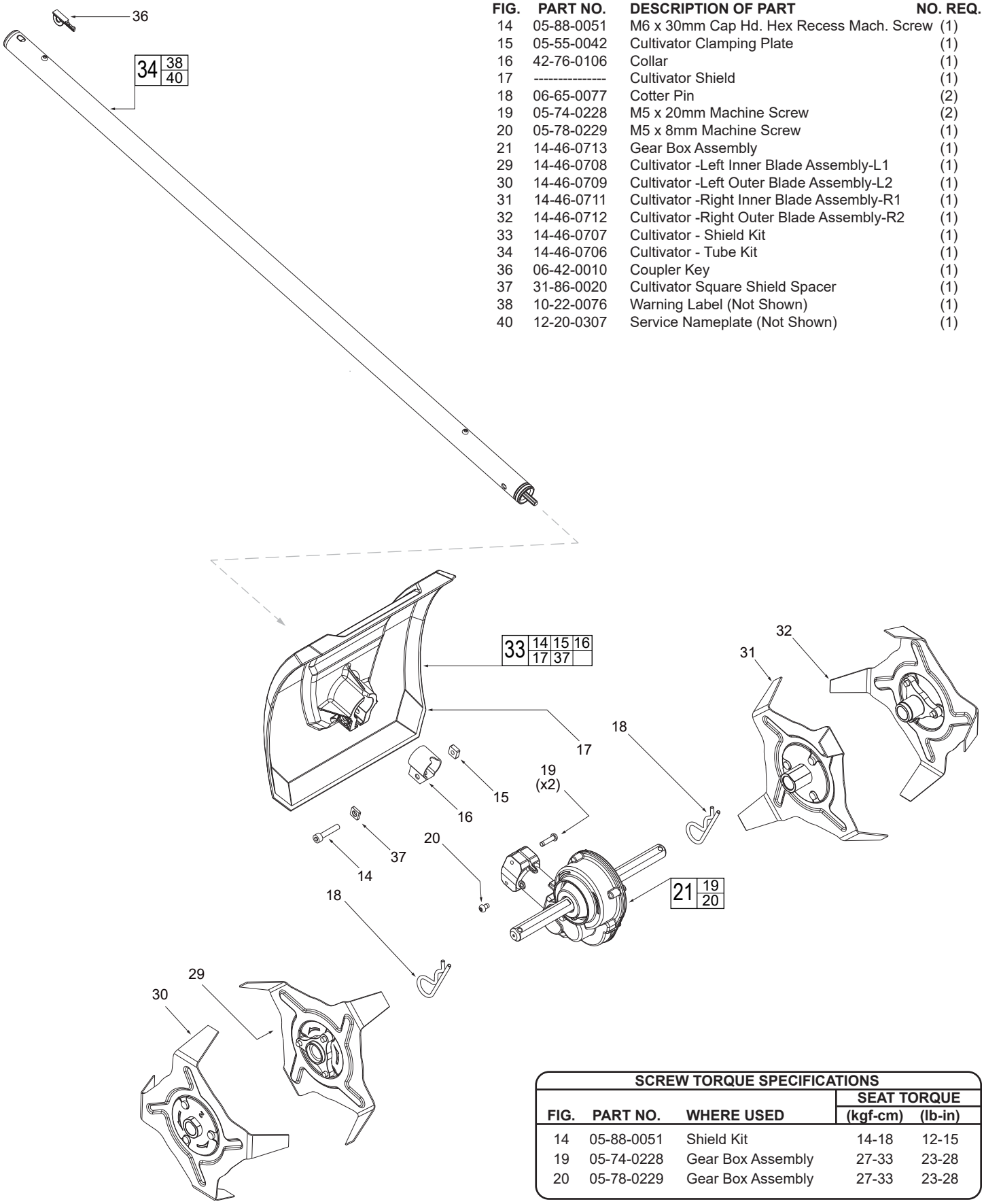

SCREW TORQUE SPECIFICATIONS

FIG.	PART NO.	WHERE USED	SEAT TORQUE (kgf-cm)	SEAT TORQUE (lb-in)
14	05-88-0051	Shield Kit	14-18	12-15
19	05-74-0228	Gear Box Assembly	27-33	23-28
20	05-78-0229	Gear Box Assembly	27-33	23-28

No. 49-16-2793

Blower Attachment

Serial No. N94A

NOTE: Apply 2g of type “J” grease (49-08-4220) to the bottom side cavity of the Blower Tube (#6).

FIG.	PART NO.	DESCRIPTION OF PART	NO. REQ.
6	----------	Blower Tube (with sleeve and shaft)	(1)
11	05-74-0419	M4 x 113mm Pan Hd. Torx CH Screw	(7)
12	45-03-0014	Blower Screen	(1)
13	43-72-0052	Cone	(1)
14	----------	Blower Screen Housing	(1)
15	----------	Blower Foam	(1)
16	----------	Tube Clamp	(1)
17	05-81-5262	M4 x 18mm ST T-15 B Screw	(7)
18	----------	M4 x 18mm ST Torx T-20 B Screw	(1)
21	31-44-0437	Stage 2 Housing	(1)
22	31-44-0438	Stage 3 Housing	(1)
24	31-12-0116	Long TIp Nozzle	(1)
25	22-08-0013	Blower Input Fan	(3)
26	45-88-0186	Flat Washer 10.5 x 20 x 3mm	(2)
27	20-20-0010	Fan Shaft	(1)
28	40-50-0219	Spring	(1)
34	31-12-0122	Flared Nozzle Attachment Assembly	(1)
35	31-12-0121	Tapered Nozzle Attachment Assembly	(1)
36	14-46-0714	Tube Kit - Gen II Quik-Lok Blower	(1)
37	----------	M5 x 13mm Pan Hd. Torx T-25 B Screw	(2)
39	10-22-0269	Warning Label A (Not Shown)	(1)
40	10-22-0270	Warning Label B (Not Shown)	(1)
41	10-22-0271	Warning Label C (Not Shown)	(1)
42	10-22-0273	Warning Label D (Not Shown)	(1)
43	12-20-0383	Service Nameplate (Not Shown)	(1)
45	14-46-0716	Screen Housing Kit	(1)
46	14-46-0717	Stage 1 Housing Assembly	(1)
47	14-46-0718	Stage 4 Housing Assembly	(1)

SCREW TORQUE SPECIFICATIONS

FIG.	PART NO.	WHERE USED	SEAT TORQUE (kgf-cm)	SEAT TORQUE (lb-in)
11	05-74-0419	Housing	10-12	9-10
17	05-74-0228	Stage 2 Housing	10-12	9-10
37	----------	Tube Clamp	20-24	17-21

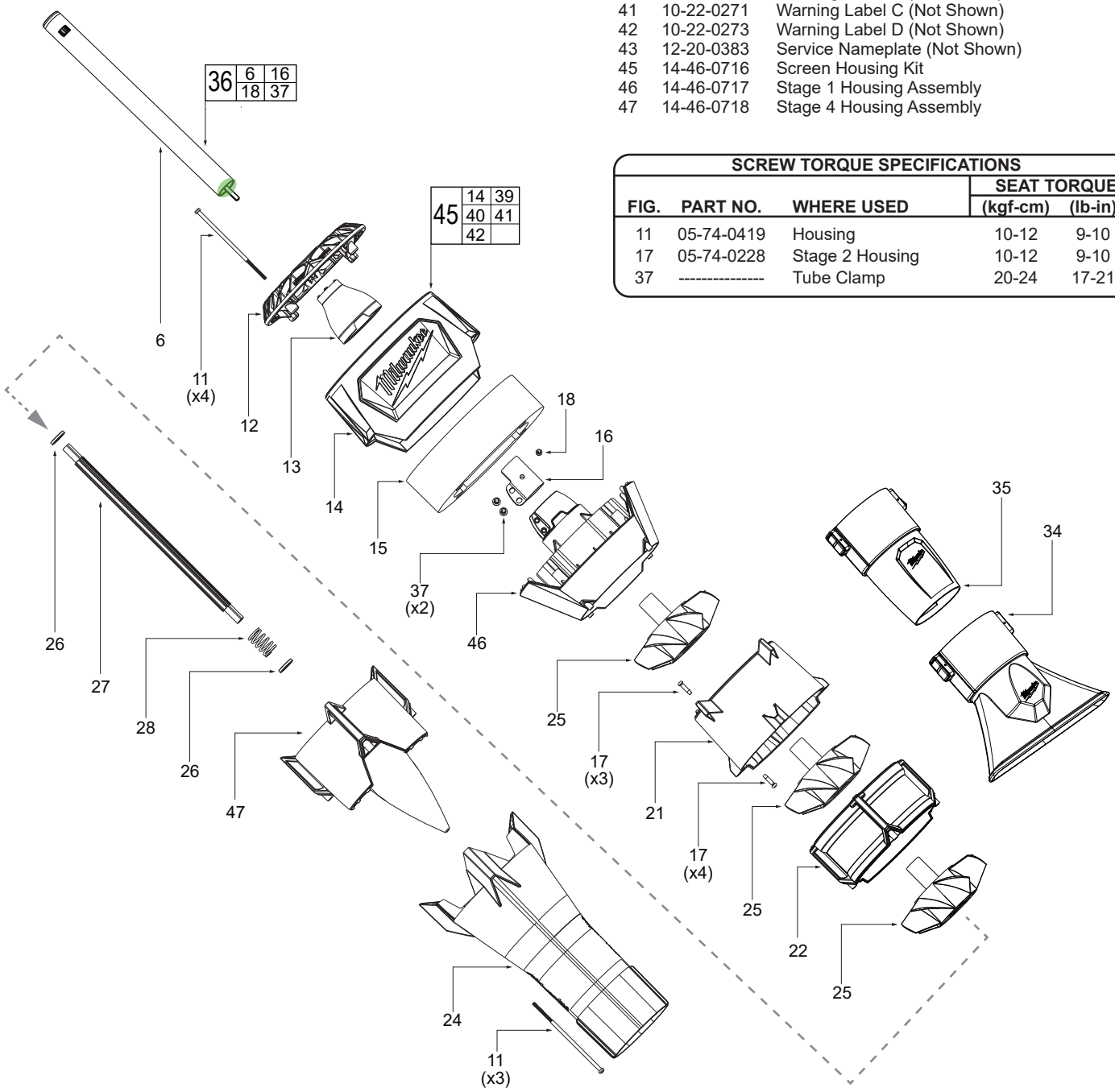

No. 49-16-2795

Bed Redefiner Attachment

Serial No. N95A

FIG.	PART NO.	DESCRIPTION OF PART	NO. REQ.
1	05-77-0016	M8 x 15mm Flange Hd. M Screw	(1)
2	43-34-2718	Washer, Edger Blade Capture	(1)
3	42-26-0031	Blade, Design 10	(1)
4	28-53-0077	Hub	(1)
5	05-74-0261	M5 x 13mm Torx T-25 B Screw	(5)
6	05-74-0262	M5 x 8mm Torx T-25 B Screw	(5)
7	28-41-0024	Guard, Ink Fill	(1)
8	28-41-0025	Rubber Guard	(1)
9	28-28-0052	Guard Front Retaining Plate	(1)
10	05-74-0263	M6 x 73mm Screw Bolt	(1)
11	42-36-0054	Wheel Plate	(1)
12	42-40-0013	Bushing, Sleeve	(1)
13	45-94-0017	Wheel, Edger	(1)
14	45-88-0077	Washer	(1)
15	05-90-0016	Spring Washer	(1)
16	28-28-0037	Skid Plate	(1)
17	43-98-0027	Clamping Knob	(1)
19	05-74-0315	M5 x 17mm Pan Hd. Torx T-25 B Screw	(2)
20	----------	O-Ring, Top	(1)
21	----------	O-Ring, Bottom	(1)
22	----------	Cultivator Tube Seal	(1)
23	----------	Tube	(1)
24	----------	M4 Hexagon Nut	(1)
25	----------	M4 x 6mm Pan Head Torx T-20 Screw	(1)
27	----------	Washer	(1)
28	----------	Sleeve for Attachment	(1)
29	----------	E-Ring	(2)
30	----------	Shaft	(1)
31	----------	Liner	(1)
33	49-96-0182	Wrench Edger	(1)
34	49-96-0012	5mm Hex Key	(1)
35	06-42-0010	Coupler Key	(1)
36	43-44-0093	Tube Assembly	(1)
37	42-92-0149	Tube Seal Assembly	(1)
38	14-30-0054	Gearbox Assembly	(1)
40	12-20-0386	Service Nameplate (Not Shown)	(1)

NOTE: item #19 (05-74-0315) should be replaced with the gearbox item #38 (14-30-0054)

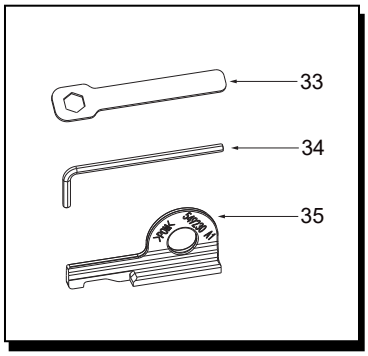

NOTE: Apply 2g of type "J" grease (49-08-4220) to the bottom side cavity of the Tube Assembly (#36).

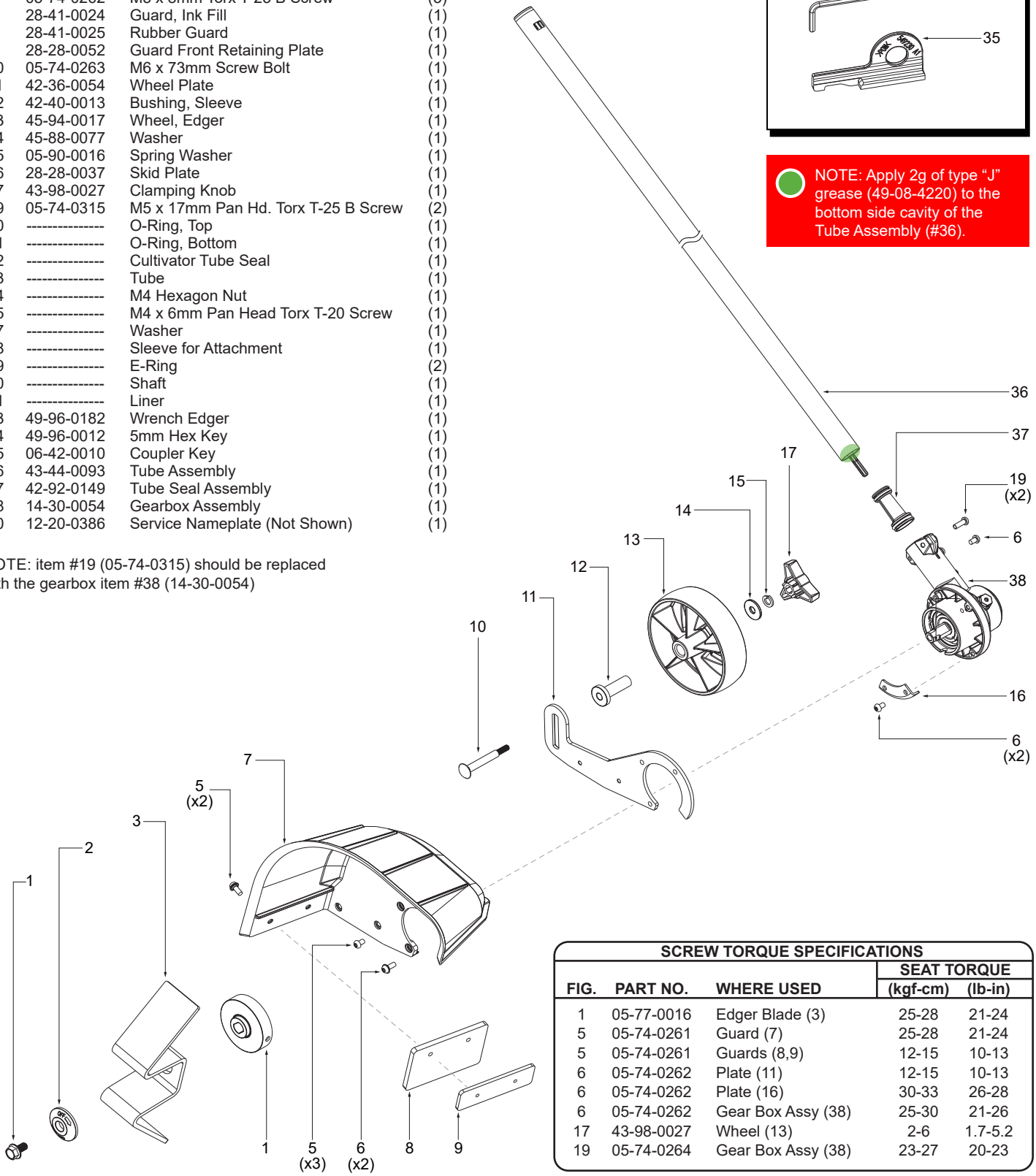

SCREW TORQUE SPECIFICATIONS				
			SEAT TORQUE	
FIG.	PART NO.	WHERE USED	(kgf-cm)	(lb-in)
1	05-77-0016	Edger Blade (3)	25-28	21-24
5	05-74-0261	Guard (7)	25-28	21-24
5	05-74-0261	Guards (8,9)	12-15	10-13
6	05-74-0262	Plate (11)	12-15	10-13
6	05-74-0262	Plate (16)	30-33	26-28
6	05-74-0262	Gear Box Assy (38)	25-30	21-26
17	43-98-0027	Wheel (13)	2-6	1.7-5.2
19	05-74-0264	Gear Box Assy (38)	23-27	20-23

No. 49-16-2796

Short Shaft Hedge Trimmer Attachment

Serial No. N97A

FIG.	PART NO.	DESCRIPTION OF PART	NO. REQ.
9	05-78-0033	M5 x 20mm Pan Hd. Torx T-25 B Screw	(10)
10	----------	Guard	(1)
11	05-55-0019	Nut	(6)
12	----------	Clamp, Bottom Guard	(1)
13	----------	Hedge Trimmer Retaining Sleeve	(1)
14	----------	Beveled Internal Ring	(1)
15	----------	Ball Bearing	(2)
16	----------	Spline Coupler	(1)
17	----------	Bevel Pinion	(1)
18	05-78-0024	M5 x 10mm Pan Hd. Torx T-25 B Screw	(1)
19	06-57-0625	M6 Nylon Insert Lock Nut	(1)
20	05-85-0080	M8 x 8mm Hex Hd. Torx T-25 B Screw	(1)
21	05-78-0029	M5 x 8mm Pan Hd. Torx T-25 B Screw	(1)
22	28-20-0108	Cover, Gear Case	(1)
23	----------	Housing, Top Gear Case	(1)
24	----------	Ball Bearing	(1)
25	31-86-0045	Bevel C-Ring	(1)
26	32-05-0042	Bevel Gear	(1)
27	45-06-0108	Felt Seal	(1)
28	36-17-0022	Crank Shaft	(1)
29	----------	Blade	(1)
29e	----------	Tip Guard	(1)
29f	----------	M5 Acorn Nut	(2)
29g	----------	M5 Pan Hd. Screw	(2)
29j	----------	Washer	(2)
29k	----------	Bushing	(2)
30	42-40-0123	Bushing	(2)
31	05-78-0019	M5 x 25mm Pan Hd. Torx T-25 B Screw	(2)
32	43-44-048	Gasket, Gear Case	(1)
33	----------	Ball Bearing	(1)
34	----------	Housing, Bottom Gear Case	(1)
35	49-62-0018	Sheath	(1)
38	12-20-0384	Service Nameplate (Not Shown)	(1)
39	10-22-0274	Warning Label (Not Shown)	(1)
50	45-76-0139	Tube Assembly	(1)
51	43-62-0057	Handguard Assembly	(1)
52	28-14-0071	Gearcase Kit	(1)
53	42-26-0016	Blade Assembly	(1)
54	28-20-0111	Gearcase Cover with Bearing Kit	(1)
55	14-46-6784	Blade Tip Guard Kit	(1)

SCREW TORQUE SPECIFICATIONS

FIG.	PART NO.	WHERE USED	SEAT TORQUE (kgf-cm)	SEAT TORQUE (lb-in)
9	05-78-0033	Guard (10)	18-24	15-20
9	05-78-0033	Housing, Top (23)	32-38	27-33
9	05-78-0033	Housing, Bottom (34)	27-33	23-28
18	05-78-0024	Housing, Top (23)	27-33	23-28
19	06-57-0625	Housing, Top (23)	21-26	18-22
20	05-85-0080	Cover (22)	26-32	23-27
21	05-78-0029	Cover (22)	21-26	18-22
31	05-78-0019	Housing, Bottom (34)	55-65	48-56

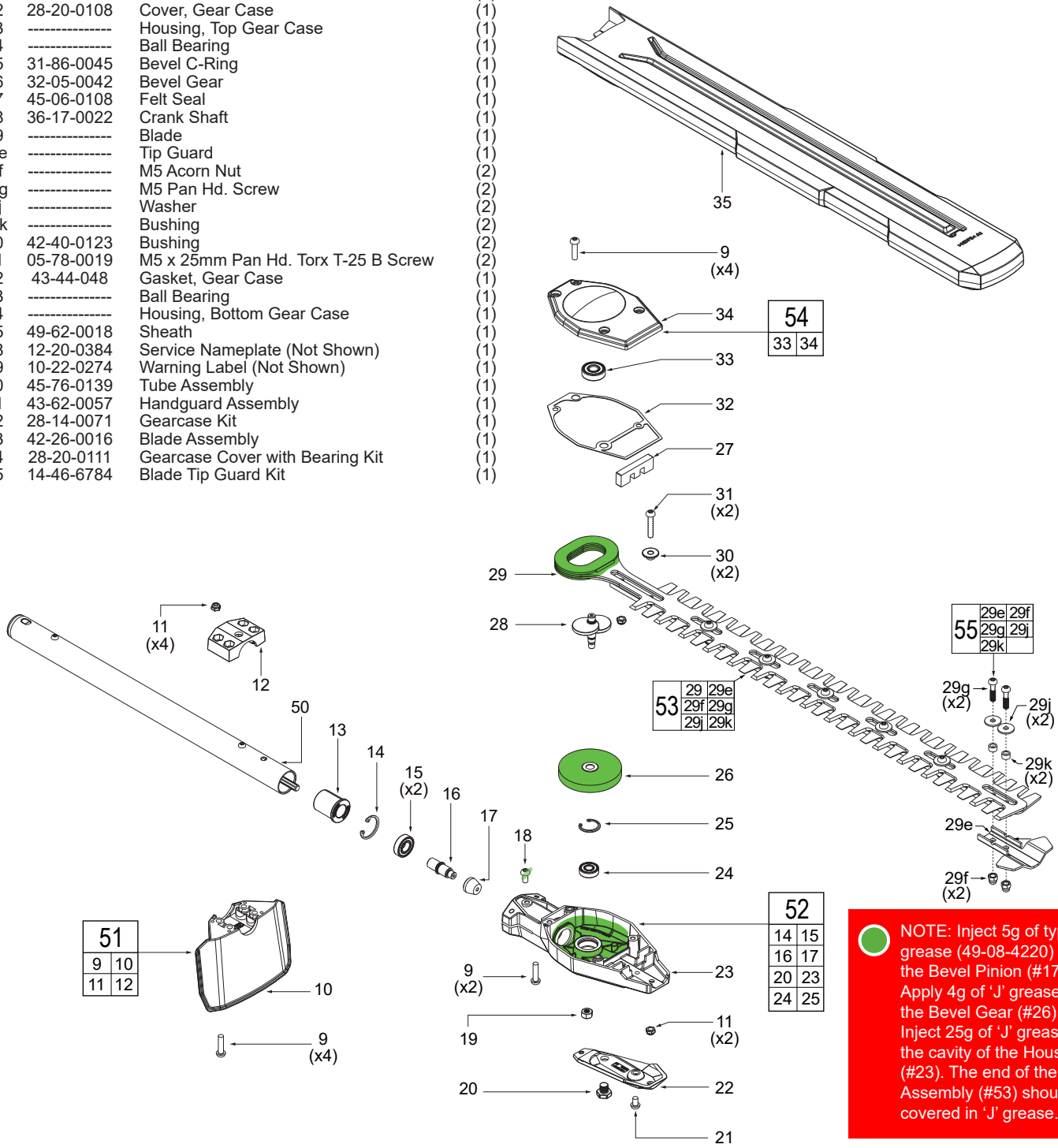

NOTE: Inject 5g of type 'J' grease (49-08-4220) into the Bevel Pinion (#17). Apply 4g of 'J' grease to the Bevel Gear (#26). Inject 25g of 'J' grease into the cavity of the Housing (#23). The end of the Blade Assembly (#53) should be covered in 'J' grease.

No. 49-16-2794

Reciprocator Attachment

Serial No. N99A

FIG.	PART NO.	DESCRIPTION OF PART	NO. REQ.
12	31-86-0048	Spacer, Sleever	(1)
13	05-78-0033	M5 x 20mm Pan Hd. Torx T-25 B Screw	(2)
14	28-14-0073	Gearcase Assembly	(1)
15	----------	Upper Blade	(1)
16	----------	Bottom Blade	(1)
17	45-22-0063	Blade Cap	(1)
18	06-74-1050	Flange Bolt	(1)
19	42-92-0137	Blade Cover	(1)
20	05-74-0239	Flanged Screw	(6)
23	05-80-0012	M6 x 12mm Flat Hd. Hex Recess B Screw	(1)
26	45-96-0035	Wrench	(1)
27	42-34-0016	Brush Cut Barrier Guard	(1)
29	10-22-0275	Long Warning Label (Not Shown)	(1)
31	12-20-0385	Service Nameplate (Not Shown)	(1)
33	----------	Shoulder Strap	(1)
34	44-66-0039	Shoulder Strap Mounting Plate	(1)
35	06-57-0625	M5 Nylon Insert Hex Nut	(1)
36	45-56-0011	Shoulder Strap Mounting Band	(1)
37	05-74-0015	M6 x 21.5mm Cap Hd. T-30 Mach. Screw	(1)
38	----------	M6 x 36mm Pan Hd. T-30 B Mach. Screw	(2)
50	45-76-0147	Tube Assembly	(1)
51	34-40-0252	Tube Seal Assembly	(1)
52	43-54-0041	Guard Assembly	(1)
53	45-56-0012	Shoulder Strap Assembly	(1)

NOTE: Apply 2g of type "J" grease (49-08-4220) to the spline of the Tube Assembly (#50). Apply 0.5g to each of the O-rings on the Tube Seal Assembly (#51).

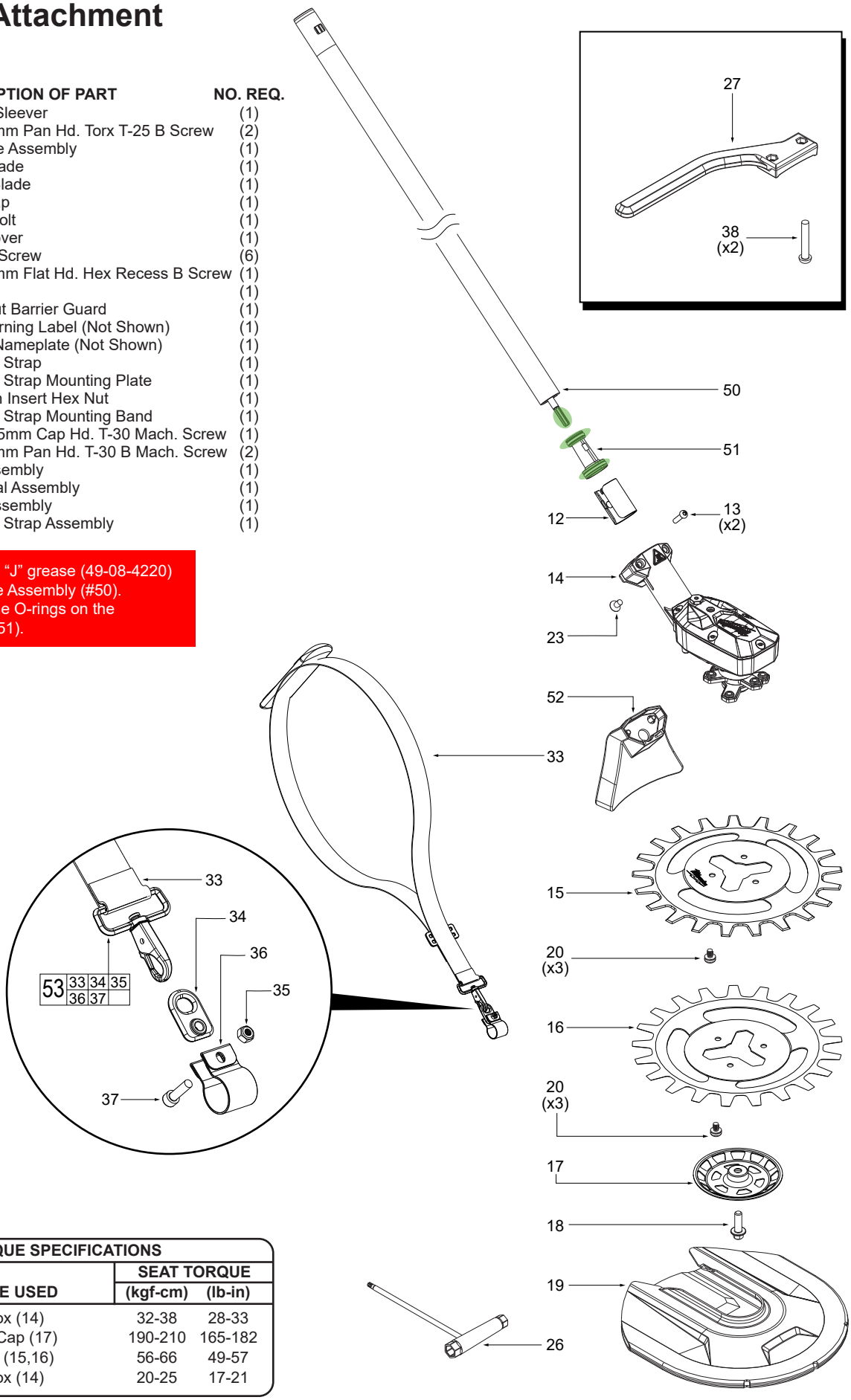

SCREW TORQUE SPECIFICATIONS				
			SEAT TORQUE	
FIG.	PART NO.	WHERE USED	(kgf-cm)	(lb-in)
13	05-78-0033	Gearbox (14)	32-38	28-33
18	06-74-1050	Blade Cap (17)	190-210	165-182
20	43-54-0041	Blades (15,16)	56-66	49-57
23	05-80-0012	Gearbox (14)	20-25	17-21

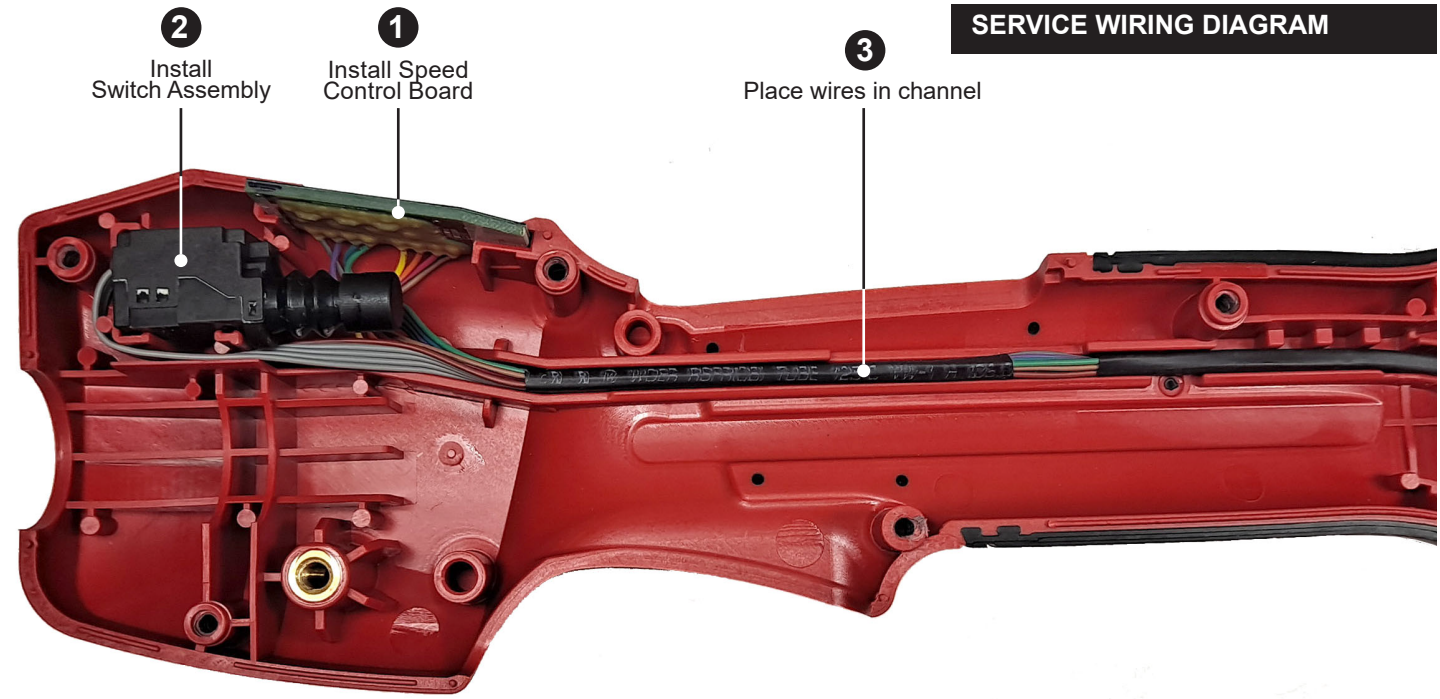
2 Install Switch Assembly
1 Install Speed Control Board
3 Place wires in channel

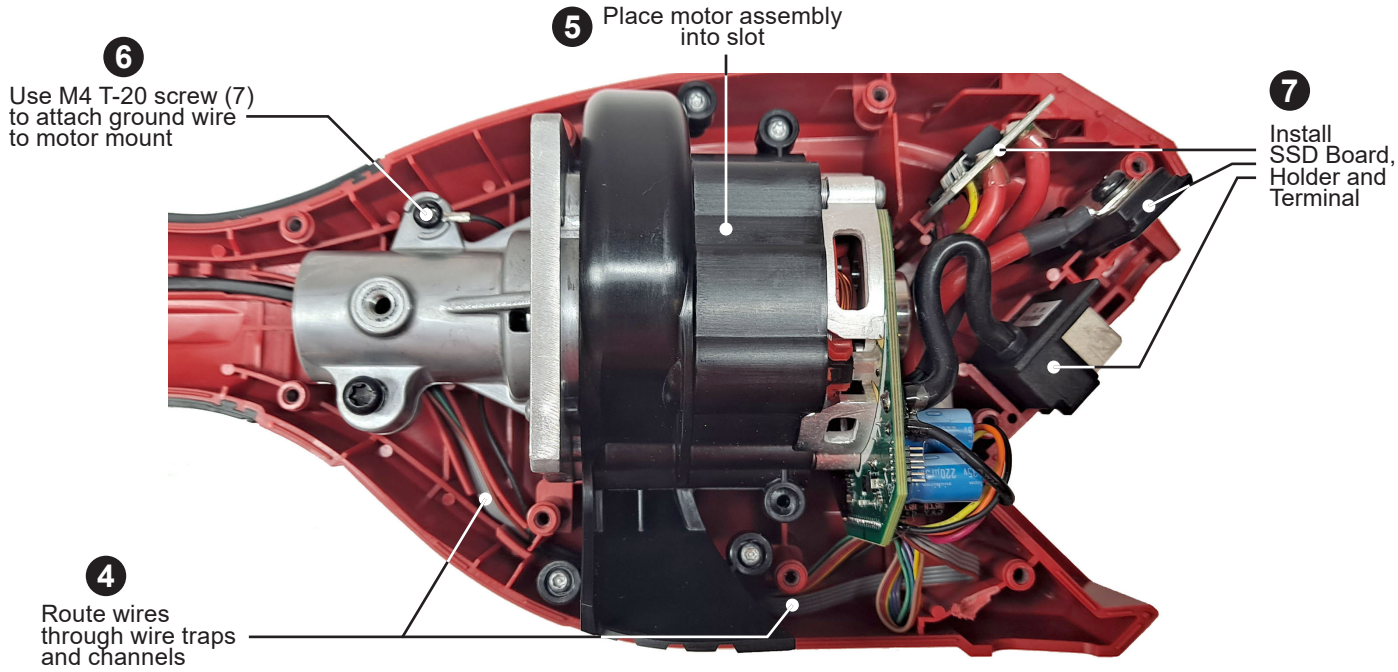
5 Place motor assembly into slot
6 Use M4 T-20 screw (7) to attach ground wire to motor mount
7 Install SSD Board, Holder and Terminal
4 Route wires through wire traps and channels

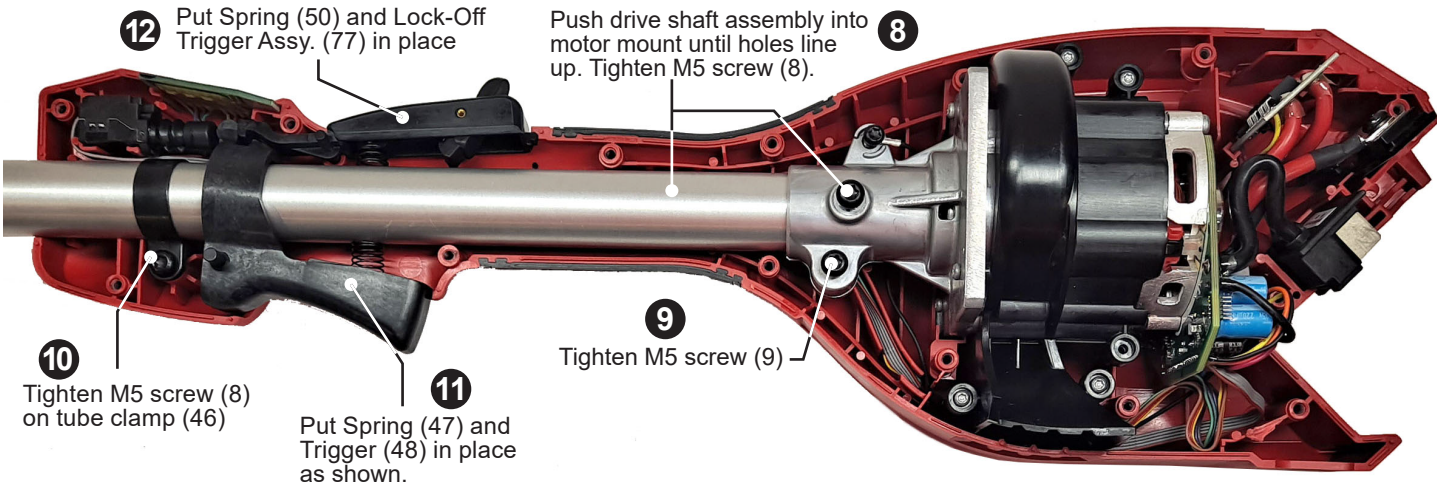
12 Put Spring (50) and Lock-Off Trigger Assy. (77) in place
Push drive shaft assembly into motor mount until holes line up. Tighten M5 screw (8).
8
9 Tighten M5 screw (9)
10 Tighten M5 screw (8) on tube clamp (46)
11 Put Spring (47) and Trigger (48) in place as shown.