SERVICE PARTS LIST

BULLETIN NO. 54-27-2475

SPECIFY CATALOG NO. AND SERIAL NO. WHEN ORDERING PARTS			REVISED BULLETIN	DATE Mar. 2024
M12™ Brushless 1-1/4" - 2" Copper Tubing Cutter			WIRING INSTRUCTION	
CATALOG NO.	**2479-20**	**SERIAL NO.** **P34A**	**SEE PAGES 4 & 5**	

EXAMPLE: 00 / 0
Component Parts (Small #) Are Included When Ordering The Assembly (Large #).

A CORRESPONDING LIST OF SERVICE PARTS (BILL OF MATERIAL) IS LOCATED ON PAGE 2

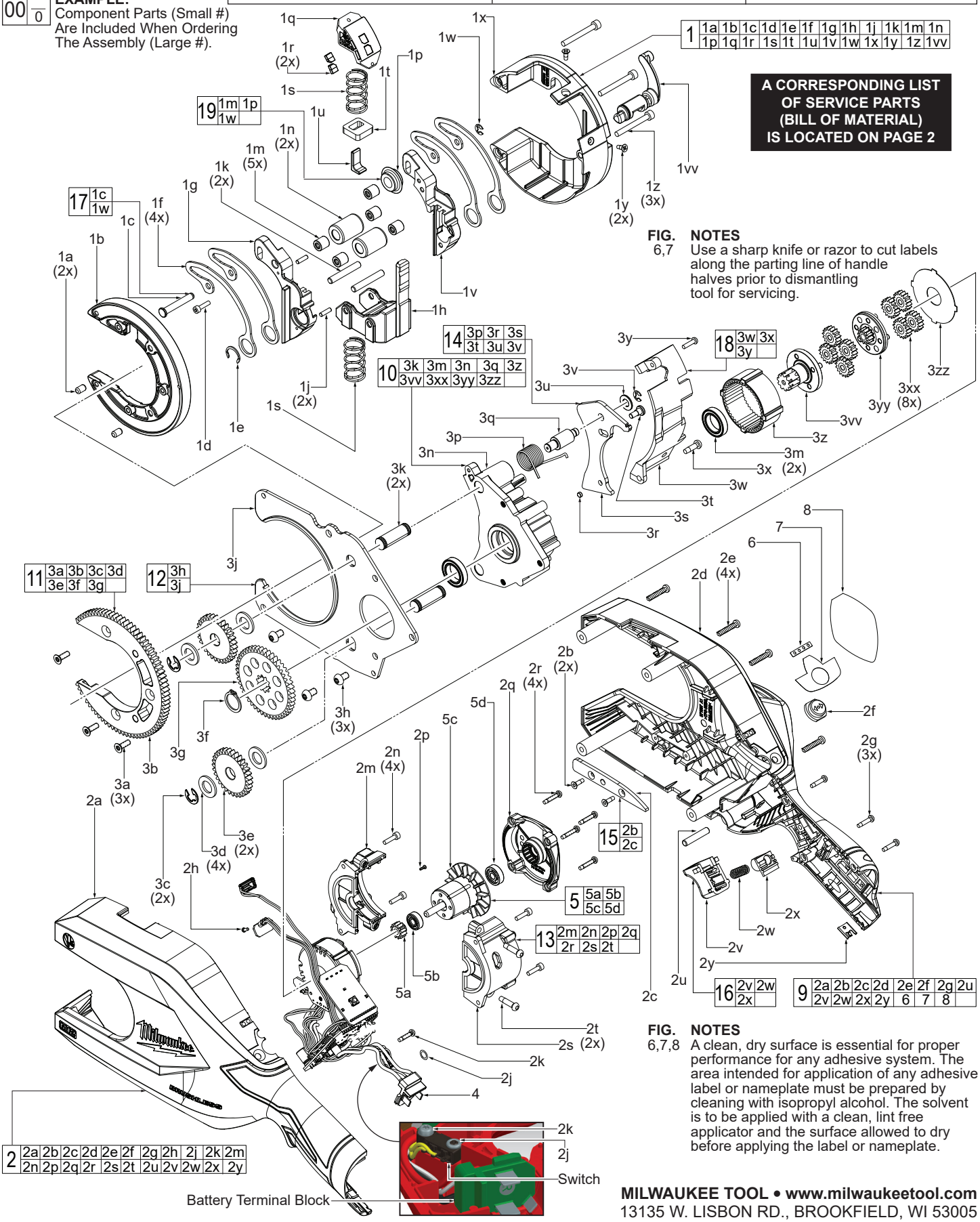

FIG. NOTES
6,7 Use a sharp knife or razor to cut labels along the parting line of handle halves prior to dismantling tool for servicing.

FIG. NOTES
6,7,8 A clean, dry surface is essential for proper performance for any adhesive system. The area intended for application of any adhesive label or nameplate must be prepared by cleaning with isopropyl alcohol. The solvent is to be applied with a clean, lint free applicator and the surface allowed to dry before applying the label or nameplate.

MILWAUKEE TOOL • www.milwaukeetool.com
13135 W. LISBON RD., BROOKFIELD, WI 53005

FIG.	PART NO.	DESCRIPTION OF PART	NO. REQ.
1	14-29-0064	2" Cutting Head Service Assembly	(1)
1a	----------	Pin	(2)
1b	----------	Head Support	(1)
1c	----------	Cutting Wheel Axle	(1)
1d	06-82-9647	M3 x 12mm Cap Hd. Hex Dr. Mach. Sc.	(1)
1e	----------	Retaining Clip	(1)
1f	----------	Cutting Spring	(4)
1g	----------	Carriage - Right	(1)
1h	----------	Roller Carriage with Stem	(1)
1j	----------	Pin	(2)
1k	----------	Roller Pin	(2)
1m	----------	Needle Roller Bearing	(5)
1n	----------	Large Roller	(2)
1p	----------	Cutting Wheel	(1)
1q	----------	Upper Spring Holder	(1)
1r	----------	Magnet	(2)
1s	----------	Carriage Spring	(2)
1t	----------	Locking Plate	(1)
1u	----------	Lifter	(1)
1v	----------	Carriage - Left	(1)
1w	34-60-0770	E-Ring	(1)
1x	----------	Head Cover	(1)
1y	05-78-0088	M3 x 8mm Flat Hd. ST #2 Phillips Scr.	(2)
1z	05-74-0258	M4 x 35mm Cap Hd. Hex Dr. Mach. Sc.	(3)
1vv	----------	Cam Shaft	(1)
2	----------	Handle Halve and Motor Housing Assy.	(1)
2a	----------	Handle/Housing Halve - Support	(1)
2b	----------	M3 x 10mm Flat Hd. T-10 ST Screw	(2)
2c	----------	Fixing Plate	(1)
2d	----------	Handle/Housing Halve - Cover	(1)
2e	45-04-1000	M4 x 18mm Pan Hd. T-15 Tapt. Screw	(4)
2f	----------	Rubber Mode Selector Button	(1)
2g	06-82-1080	M3 x 14mm Pan Hd. T-10 ST Screw	(3)
2h	----------	M2 x 5mm Pan Hd. T-6 Machine Screw	(1)
2j	34-40-0089	O-Ring	(1)
2k	----------	M3 x 14mm Pan Hd. T-10 ST Screw	(1)
2m	----------	Motor Housing Halve - Support	(1)
2n	----------	M3 x 12mm Cap Hd. Hex Dr. Mach. Sc.	(4)
2p	05-71-0080	M1.7 x 5mm Pan Hd. ST Phillips Screw	(1)
2q	----------	Back Cap	(1)
2r	----------	M3 x 16mm Pan Hd. T-10 ST Screw	(4)
2s	----------	Motor Housing Halve - Cover	(1)
2t	05-81-0066	M4 x 16mm Pan Hd. T-15 ST Screw	(2)
2u	----------	Pin	(1)
2v	----------	Trigger	(1)
2w	40-50-0104	Switch Spring	(1)
2x	----------	Spring Housing	(1)
2y	42-70-0058	Housing Connection Clip	(1)

FIG.	PART NO.	DESCRIPTION OF PART	NO. REQ.
3a	05-78-0013	M4 x 12mm Flat Hd. T-20 Mach. Screw	(3)
3b	----------	Output (Carriage) Gear	(1)
3c	42-70-5268	E-Ring	(2)
3d	45-88-0841	Flat Washer	(4)
3e	----------	Idler Gear	(2)
3f	42-70-5272	C-Ring	(1)
3g	----------	Input Gear	(1)
3h	----------	M5 x 8mm Pan Hd. T-25 Mach. Screw	(3)
3j	----------	Spur Gear Plate	(1)
3k	----------	Idler Gear Pin	(2)
3m	----------	Deep Groove Ball Bearing	(2)
3n	----------	Gearbox	(1)
3p	40-50-0954	Torsion Spring	(1)
3q	----------	Locking Plate Pin	(1)
3r	----------	Magnet	(1)
3s	----------	Reset Lever	(1)
3t	05-80-0137	M4 x 6mm w/Boss Pan Hd. Phillips Scr.	(1)
3u	45-88-0327	Washer	(1)
3v	34-60-0770	E-Ring	(1)
3w	----------	Opening Cover	(1)
3x	05-88-1360	M4 x 13.5mm Pan Hd. T-20 ST Screw	(1)
3y	05-74-0501	M3 x 12mm Pan Hd. T-10 Mach. Scr.	(1)
3z	----------	Ring Gear	(1)
3vv	----------	Carrier Shaft	(1)
3xx	----------	Planet Gear	(8)
3yy	----------	Sun Gear	(1)
3zz	----------	Flat Washer	(1)
4	14-20-0223	Stator/Electronics Service Assembly	(1)
5	14-50-2479	Rotor Service Assembly	(1)
5a	----------	Motor Pinion	(1)
5b	----------	Ball Bearing	(1)
5c	----------	Rotor	(1)
5d	----------	Ball Bearing	(1)
6	10-22-1680	LED Label	(1)
7	10-22-1681	Mode Selector Label	(1)
8	12-20-0808	Service Nameplate	(1)
9	31-44-1014	Handle Halve/Motor Hsg. Service Kit	(1)
10	14-29-0066	Gearbox Service Assembly	(1)
11	14-46-0561	Gear Service Kit	(1)
12	14-67-0334	Spur Plate Service Kit	(1)
13	14-38-0760	Motor Housing Service Kit	(1)
14	14-46-0562	Reset Lever Service Kit	(1)
15	14-46-0563	Fixing Plate Service Kit	(1)
16	14-46-0564	Trigger Service Kit	(1)
17	14-46-0568	Axle and E-Ring Service Kit	(1)
18	14-46-0569	Opening Cover Service Kit	(1)
19	48-38-4257	Cutting Wheel with Bearing Assembly (Accessory - Set of 2)	(1)

SCREW TORQUE SPECIFICATIONS

FIG.	PART NO.	DESCRIPTION OF FASTENER	WHERE USED	SEAT TORQUE (lb-in)	SEAT TORQUE (kgf-cm)
1d	06-82-9647	M3 x 12mm Cap Hd. Hex Dr. Mach. Screw	Carriage - Right	13.0±1.3	15±1.5
1y	----------	M3 x 8mm Flat Hd. ST #2 Phillips Screw	Head Cover	4.3±0.4	5±0.5
1z	05-74-0258	M4 x 35mm Cap Hd. Hex Dr. Mach. Screw	Head Cover	22.5±2.6	26±3
2b	----------	M3 x 10mm Flat Hd. T-10 ST Screw	Fixing Plate	9.5±0.9	11.2±1.1
2e	45-04-1000	M4 x 18mm Pan Hd. T-15 Tapt. Screw	Handle/Housing Halve - Cover	13.8±1.3	16±1.6
2g	06-82-1080	M3 x 14mm Pan Hd. T-10 ST Screw	Handle/Housing Halve - Cover	8.6±0.8	10±1
2h	----------	M2 x 5mm Pan Hd. T-6 Machine Screw	Hall Head Sensor Board	2.6±0.8	3±1
2k	----------	M3 x 14mm Pan Hd. T-10 ST Screw	Switch	4.3±0.4	5±0.5
2n	----------	M3 x 12mm Cap Hd. Hex Dr. Mach. Screw	Motor Housing Halves	7.8±0.8	9±1
2p	05-71-0080	M1.7 x 5mm Pan Hd. ST Phillips Screw	Hall Lever Sensor Board	1.5±0.1	1.75±0.1
2r	----------	M3 x 16mm Pan Hd. T-10 ST Screw	Back Cap	8.6±0.8	10±1
2t	05-81-0066	M4 x 16mm Pan Hd. T-15 ST Screw	Motor Housing Halve - Cover	21.6±1.7	25.2±2
3a	05-78-0013	M4 x 12mm Flat Hd. T-20 Mach. Screw	Output Gear	30.3±3.4	35±4
3h	----------	M5 x 8mm Pan Hd. T-25 Mach. Screw	Spur Gear Plate	32.9±3.2	38±3.8
3t	05-80-0137	M4 x 6mm w/Boss Pan Hd. Phillips Screw	Reset Lever	19.0±1.9	22±2.2
3x	05-88-1360	M4 x 13.5mm Pan Hd. T-20 ST Screw	Opening Cover	9.5±0.8	11±1
3y	05-74-0501	M3 x 12mm Pan Hd. T-10 Mach. Screw	Opening Cover	8.6±0.8	10±1

LUBRICATION NOTES:

NOTE: When servicing, remove 90-95% of existing grease prior to installing Type 'J'.
Original grease may be similar in color but may not compatible with 'J'.
Prior to reinstalling, clean gear assemblies with a clean, dry cloth.
Lightly coat all individual parts highlighted here with grease.
Apply a greater amount of grease to all internal and external gear teeth.

= Type 'J' Grease, (1 lb. tub), No. 49-08-4220
= Type 'T' Grease, (1 lb. tub), No. 49-08-4290
= 416 Clear Loctite®
NOTE: 416 is an instant adhesive, not a thread-locking compound.

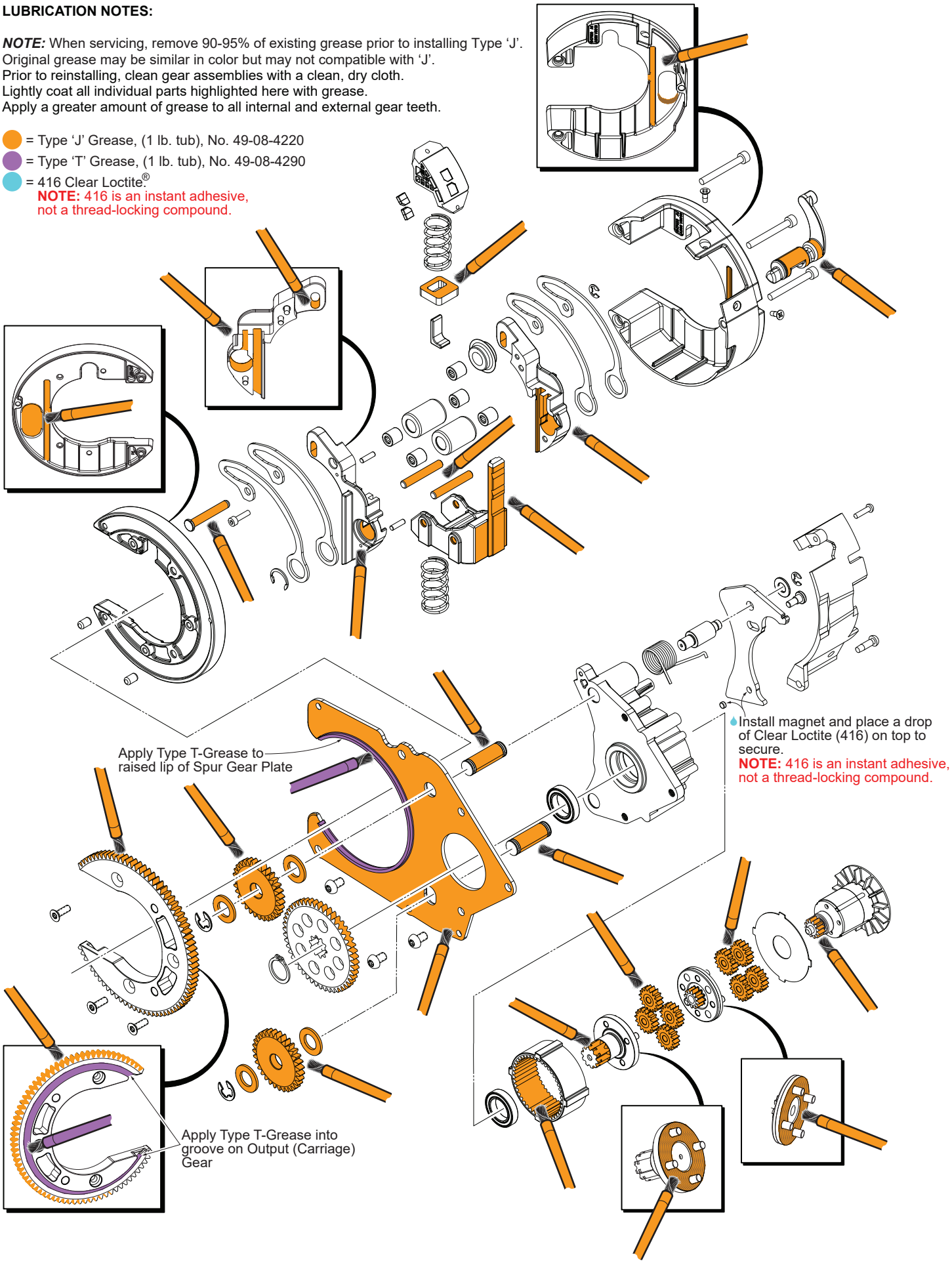

Electronics Assembly

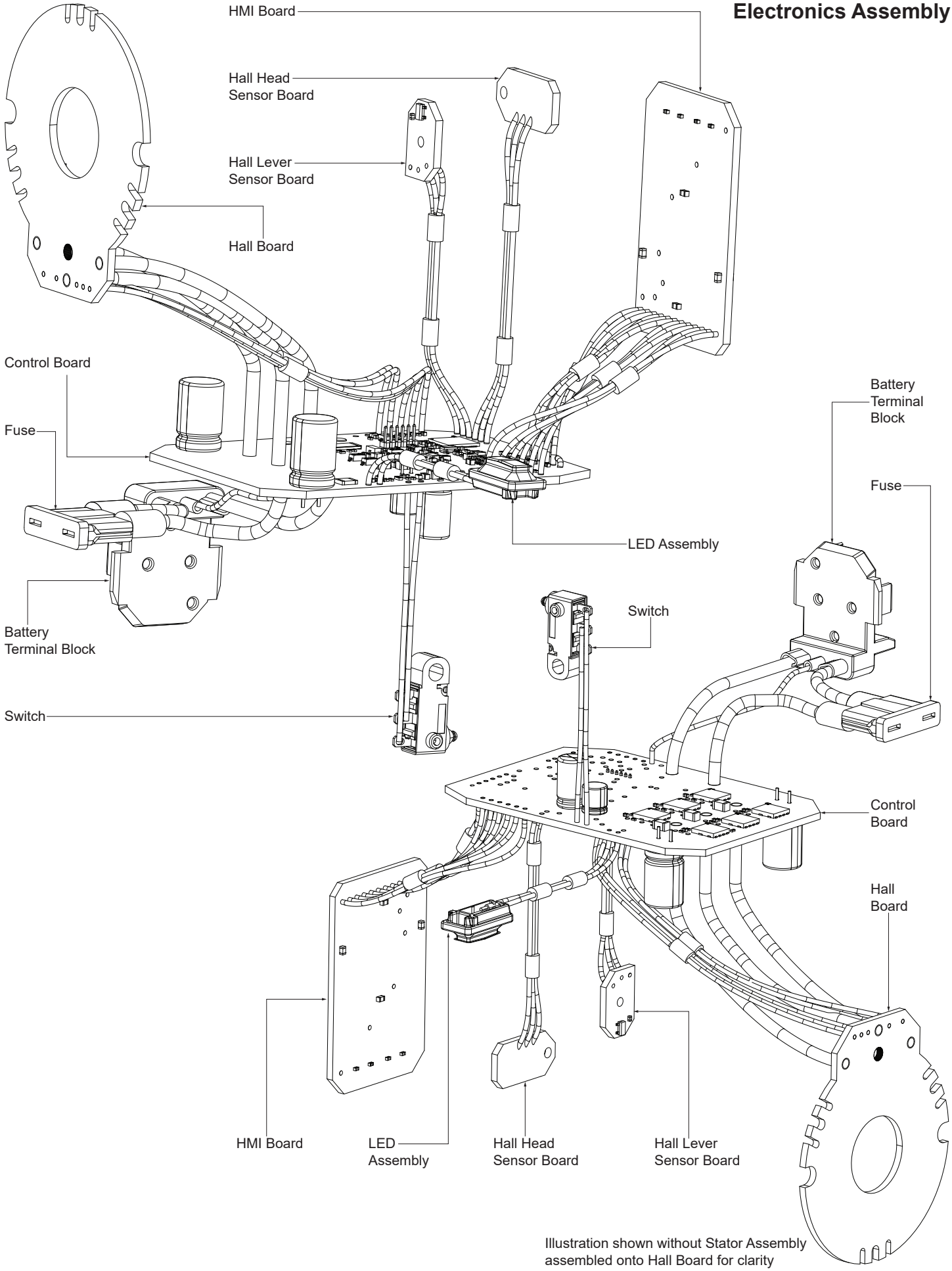

Illustration shown without Stator Assembly assembled onto Hall Board for clarity

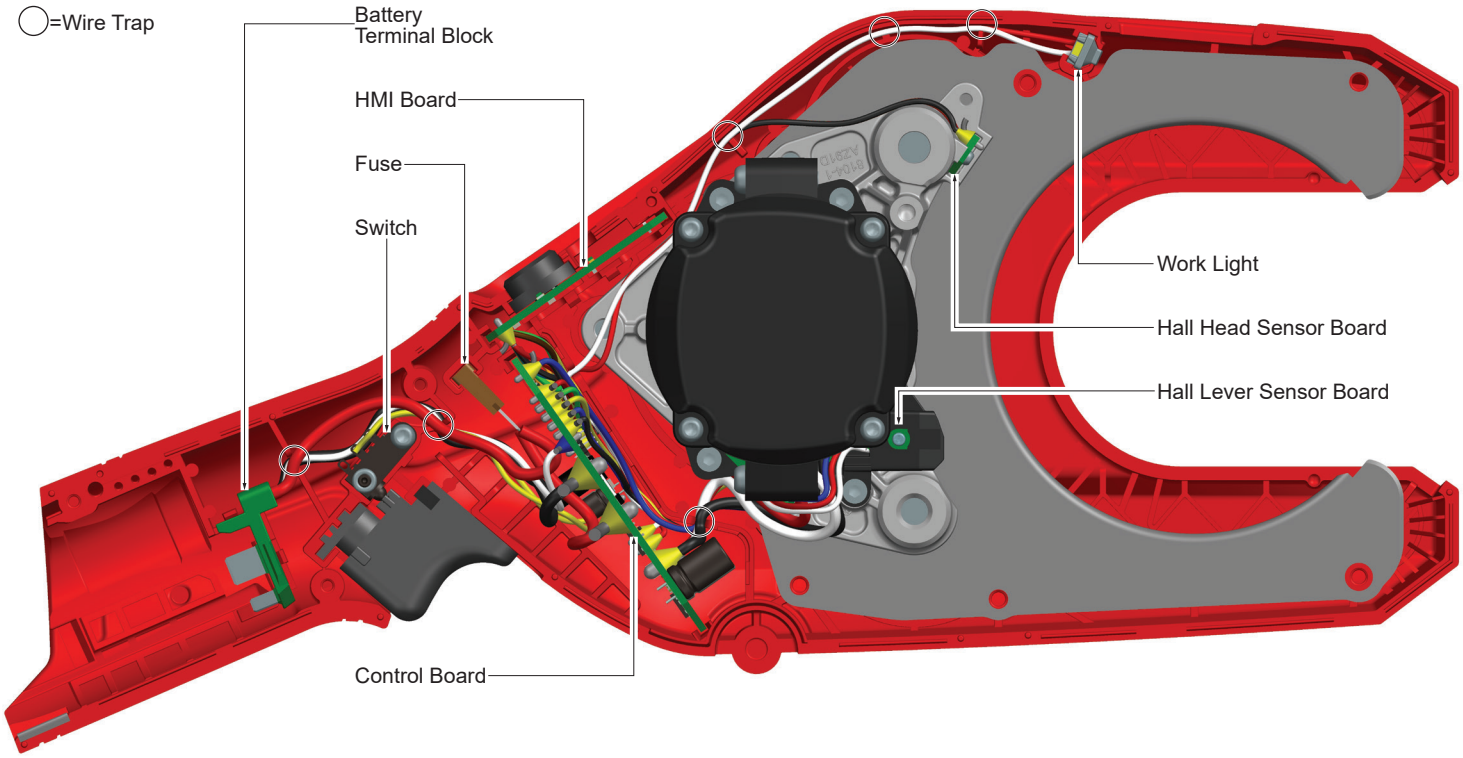

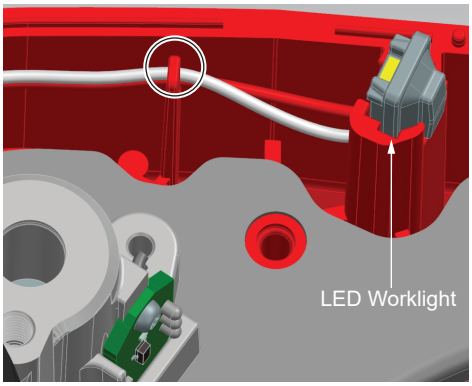

LED Worklight wire routing sequence. Place red in the bottom of trap with the white wire on top.

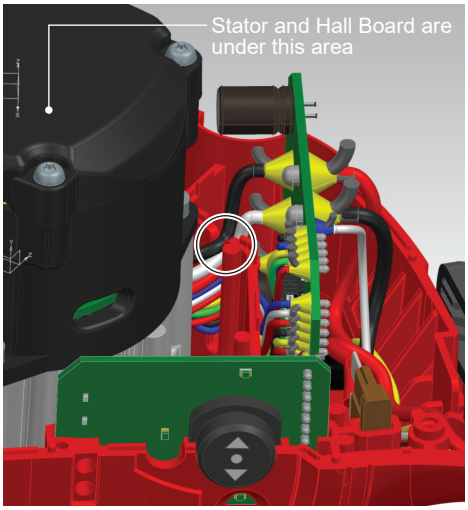

Stator and Hall Board wire routing sequence. Place thin wires in the bottom of trap and thick wires on top. NOTE: Stator and Hall Board are concealed under motor housing halves and cover.

Hall Head Sensor wire routing sequence. Place red wire in bottom of trap followed by yellow wire and black wire. Place LED wires on top as shown.

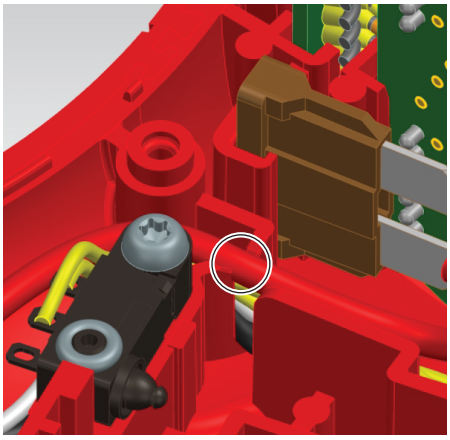

Switch and Battery Terminal Block wires are routed as shown. Place red wire from terminal block on bottom of trap followed by black and white from terminal block. Next place the two yellow switch wires. Install the red terminal block wire on top to secure all wires in trap.

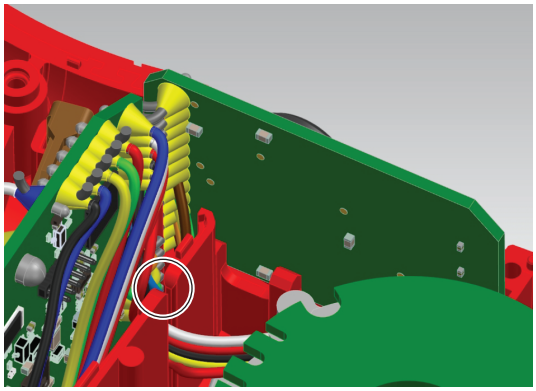

Hall Head and Worklight wire routing: red wire on the bottom, followed by yellow, black, red with white on top.

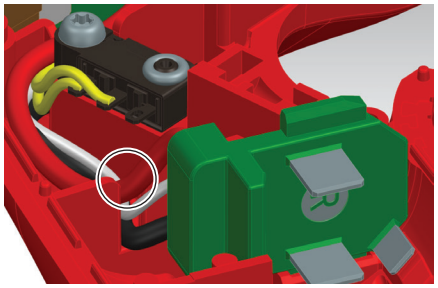

Battery Terminal Block wire routing sequence is black on the bottom, followed by the white wire. Place the red wire on top.