SERVICE PARTS LIST

BULLETIN NO. 54-27-2800

SPECIFY CATALOG NO. AND SERIAL NO. WHEN ORDERING PARTS			REVISED BULLETIN	DATE
M18™ Brushless Threaded Rod Cutter				June 2024
CATALOG NO.	**2872-20**	**SERIAL NO.** **K38A and B**	WIRING INSTRUCTION **SEE PAGE 2**	

EXAMPLE: 00 / 0
Component Parts (Small #) Are Included When Ordering The Assembly (Large #).

Die Placement Guide
Dots indicate which jaw the dies fit into.

Single dot die to be placed into movable jaw.

Double dot die to be placed into fixed jaw.

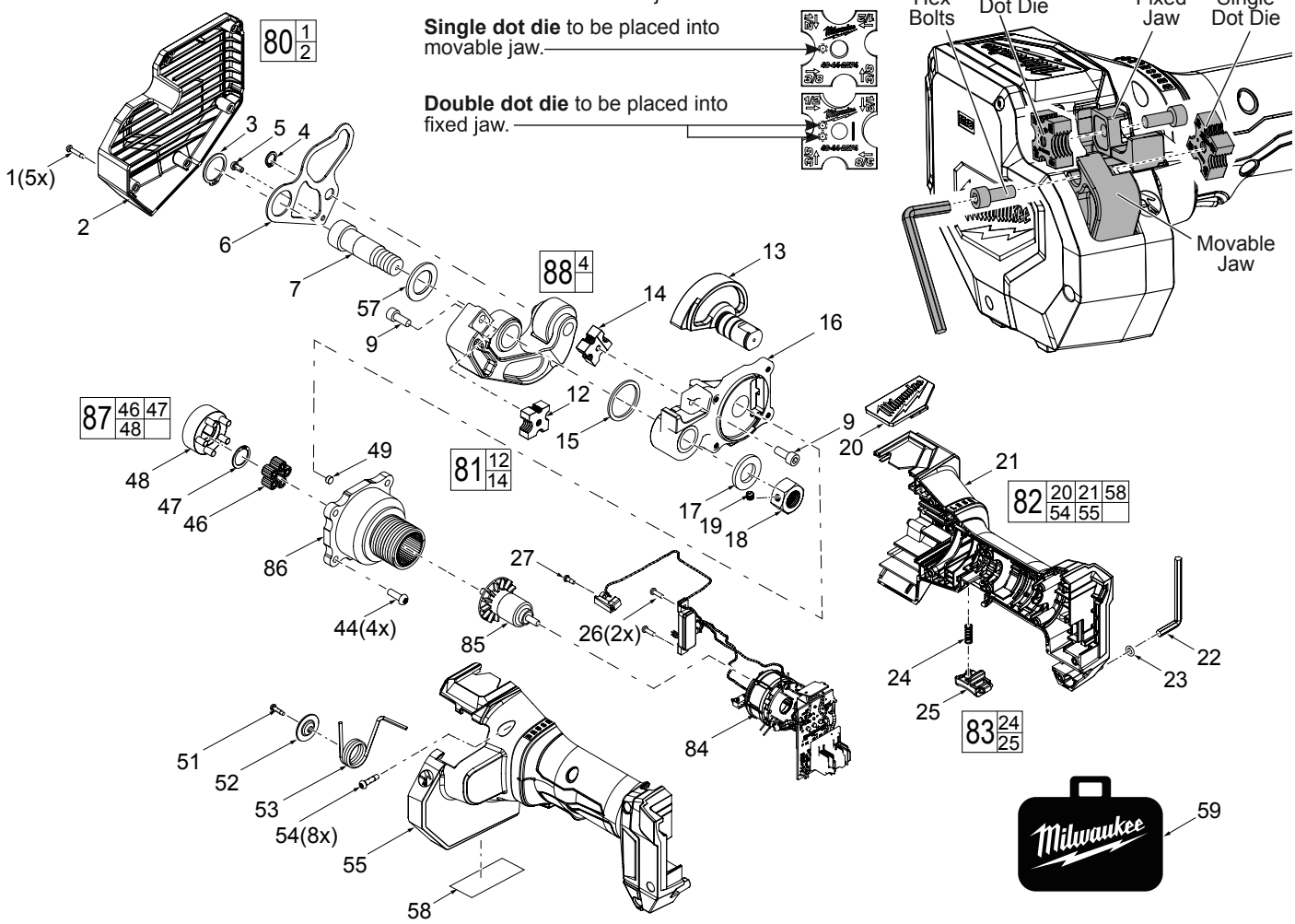

FIG.	PART NO.	DESCRIPTION OF PART	NO. REQ.
1	06-82-6350	M3 x 16mm Pan Hd. ST T-10 Screw	(5)
2	----------	Cover	(1)
3	34-60-2872	Retaining Ring	(1)
4	34-60-2873	Retaining Ring	(1)
5	05-81-1030	M4 x 9mm Pan Hd. T-20 M. Screw	(1)
6	44-66-2872	Guide Plate	(1)
7	06-14-2872	LH Bolt	(1)
9	45-04-1095	M6 x 15mm Hex Socket Bolt	(2)
12	----------	Bottom Die	(1)
13	42-50-2872	Cam	(1)
14	----------	Top Die	(1)
15	43-44-0365	Gasket	(1)
16	45-60-2872	Arm Support	(1)
17	45-88-2872	Washer	(1)
18	05-55-2872	M16 LH Hex Nut	(1)
19	06-83-2872	Set Screw	(1)
20	----------	Logo Plate	(1)
21	----------	Right Handle Halve - Support	(1)
22	45-96-2872	M5 Allen Key	(1)
23	34-40-4480	O-Ring	(1)
24	40-50-0024	Spring	(1)
25	----------	Switch Trigger	(1)
26	06-82-2872	M3 x 10mm Pan Hd. T-10 Screw	(2)
27	06-82-0062	M3 x 8mm Pan Hd. ST T-10 Screw	(1)

FIG.	PART NO.	DESCRIPTION OF PART	NO. REQ.
44	06-82-2873	M5 x 15mm Pan Hd. T-25 Mach. Screw	(4)
46	----------	5th Planet Gear	(5)
47	----------	Retaining Ring	(1)
48	----------	Carrier Cam	(1)
49	44-26-2872	Magnet	(1)
51	06-82-1087	M3 x 12mm Pan Hd. ST T-10 Screw	(1)
52	42-14-2872	Metal Baffle	(1)
53	40-50-2872	Spring	(1)
54	05-88-1200	M4 x 16mm Pan Hd. ST T-20 Screw	(8)
55	----------	Left Handle Halve - Cover	(1)
57	45-88-2890	Washer	(1)
58	12-20-2872	Service Nameplate	(1)
59	42-55-2872	Blow Molded Carrying Case	(1)
80	42-92-2872	Cover Kit	(1)
81	43-04-2872	Die Kit	(1)
82	31-44-2872	Handle Service Kit	(1)
83	45-72-2872	Trigger Kit	(1)
84	14-20-2872	Electronics Assembly	(1)
85	16-01-2872	Rotor Assembly	(1)
86	14-30-2872	Gearcase Assembly	(1)
87	14-30-1025	Rear Gearcase Assembly Kit	(1)
88	42-09-2872	Arm/Roller Assembly Kit	(1)

MILWAUKEE TOOL • www.milwaukeetool.com
13135 W. LISBON RD., BROOKFIELD, WI 53005

Drwg. 6

WIRING

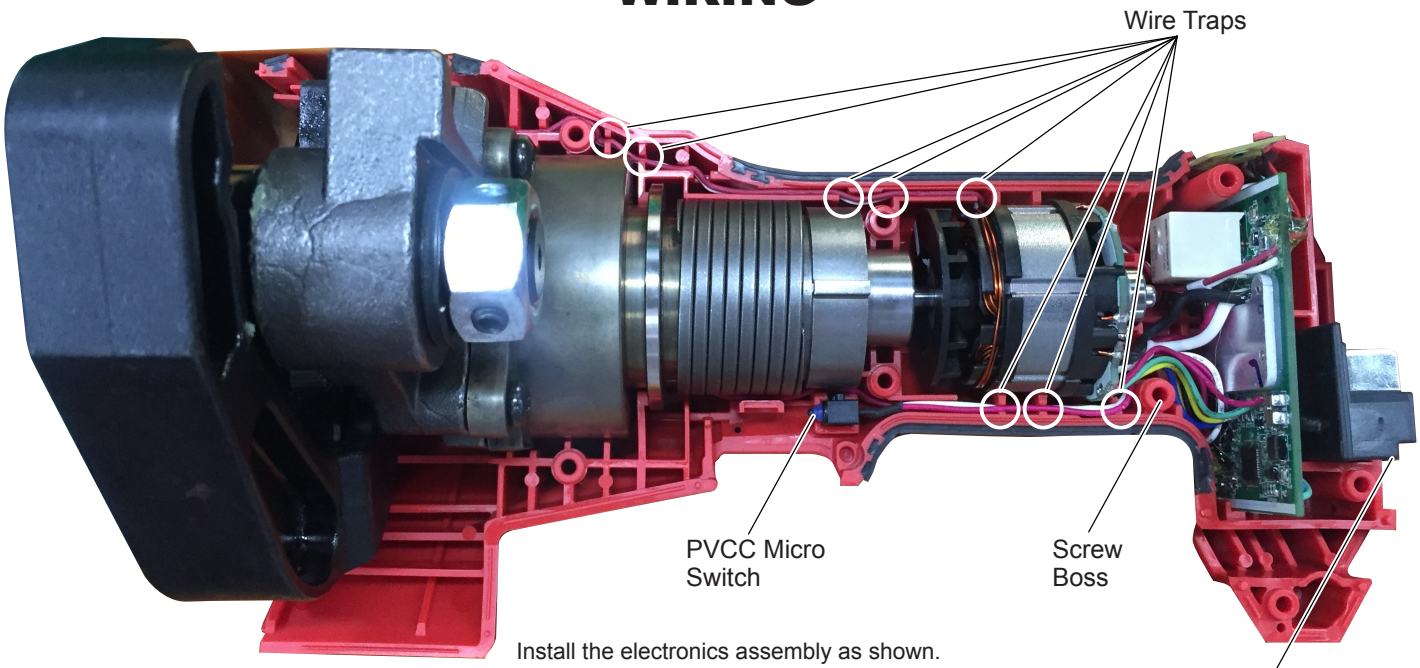

Install the electronics assembly as shown.
Route wires around screw bosses and into wire traps.
Be sure all components are seated squarely and firmly in place.
Be sure there is no interference when installing the housing cover.

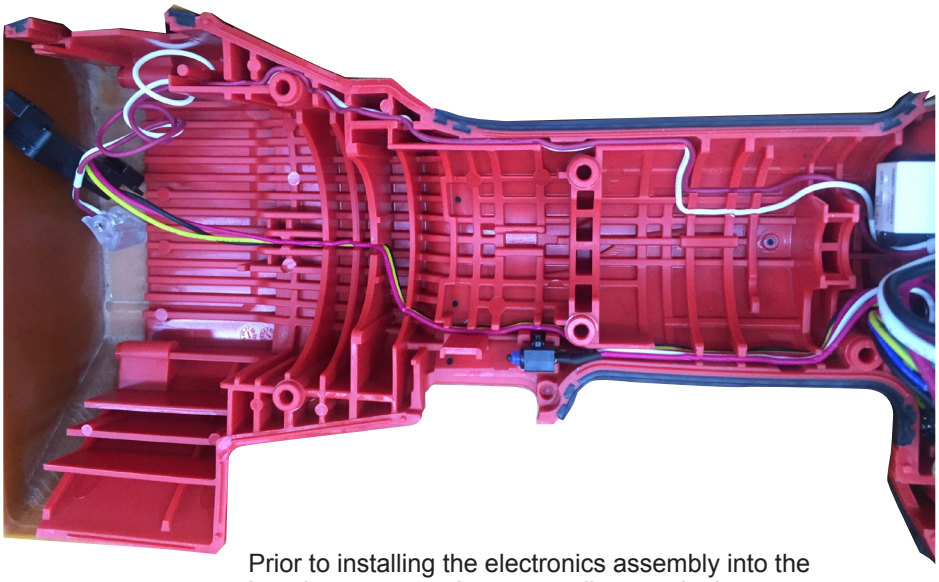

Prior to installing the electronics assembly into the housing support, place grounding terminal over screw boss as shown. Route ground wire, removing as much slack as possible. Be sure wire is pressed firmly to the back of the wire traps.

AS AN AID TO REASSEMBLY, TAKE NOTICE OF WIRE ROUTING AND POSITION IN WIRE GUIDES AND TRAPS WHILE DISMANTLING TOOL.

BE SURE THAT ALL COMPONENTS OF THE ELECTRONICS KIT ARE SEATED FIRMLY AND SQUARELY IN THE HANDLE RECESSES.

AVOID PINCHED WIRES, BE SURE THAT ALL WIRES AND SLEEVES ARE PRESSED COMPLETELY DOWN IN WIRE GUIDES AND TRAPS.

PRIOR TO INSTALLING THE HANDLE COVER ONTO THE HANDLE SUPPORT, BE SURE THAT THERE ARE NO INTERFERENCES.

CARRIER CAM ASSEMBLY

Correct Carrier Cam Assembly

The magnet and the sharper end of the cam should be in opposite direction as shown in the image.

NOTE - If installed incorrectly, the tool will only complete a partial cut.

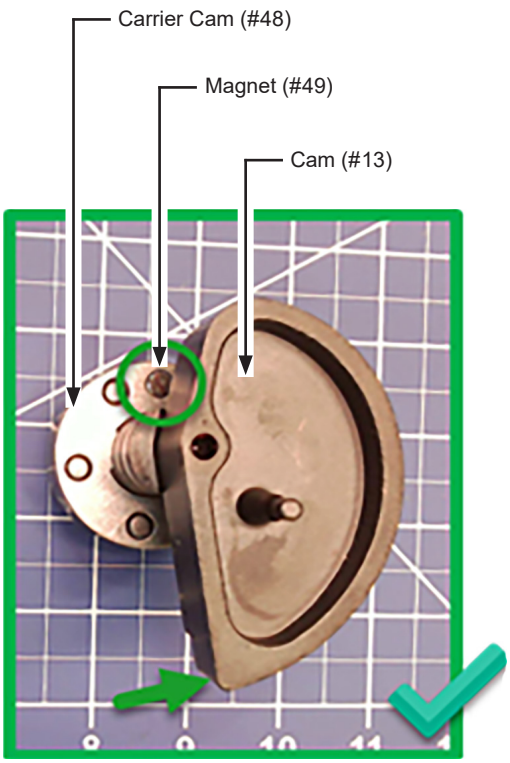

CORRECT

The magnet is on the opposite end from the pointed end of the cam. This is the correct position.

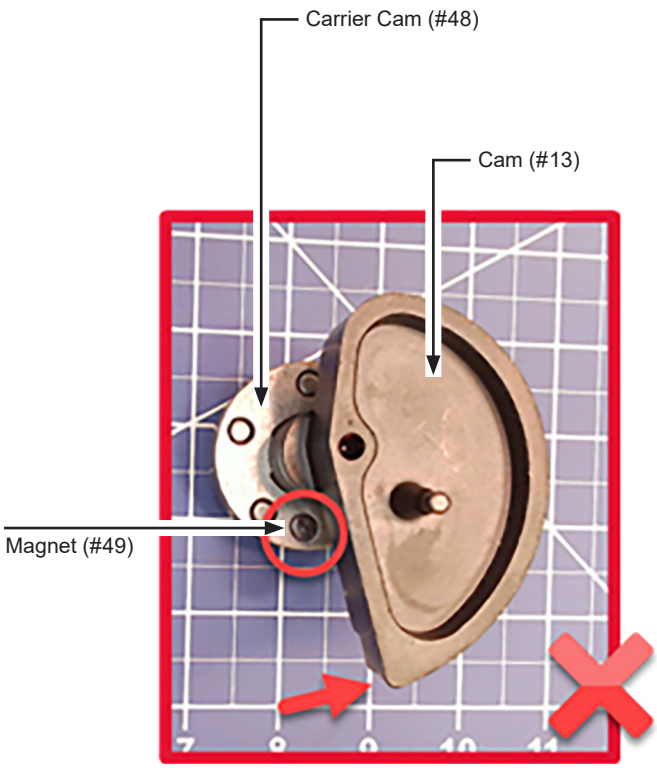

INCORRECT

LUBRICATION

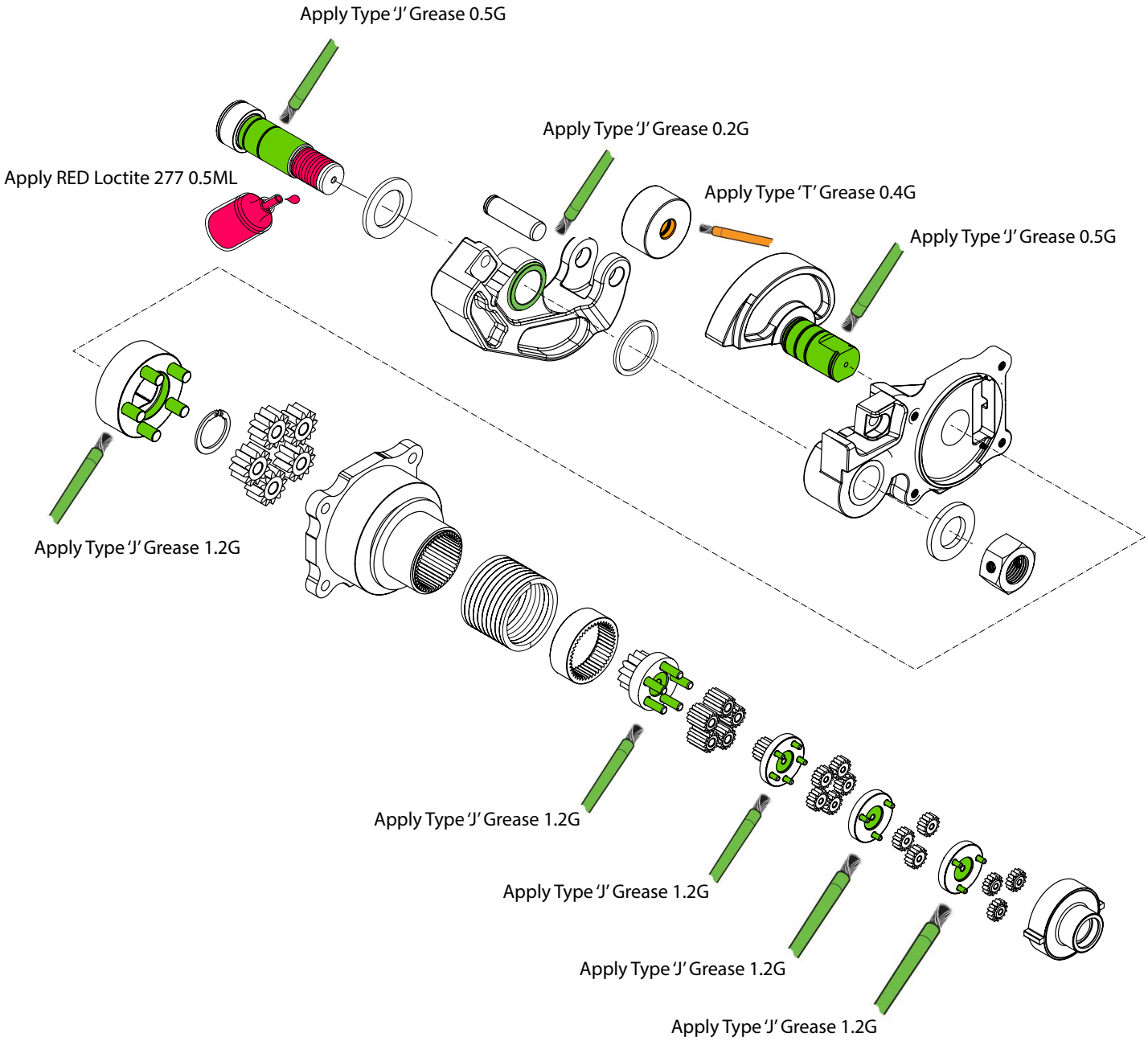

= Type 'J' Grease 48-08-4220

= 277 Red Loctite 44-22-0050

= Type "T' Grease 49-08-4260