497-0929-00 (25)
MODEL NUMBER
ZPS20K5E-PFV/PFJ/TF5/TFD
ZPS21K5E-PFV
ZPS26K5E-PFV/PFJ/TF5/TFD/TFE
ZPS30K5E-PFV/PFJ/TF5/TFD/TFE
ZPS31K5E-PFV
ZPS20LXE-PFJ
ZPS21LXE-TF5/TFD
ZPS26LXE-PFV/PFJ/TF5/TFD (27)
ZPS30LXE-PFJ (27)

497-0929-01 (26)
MODEL NUMBER
ZPS24K6E-PFV
ZPS26K6E-PFV
ZPS29K6E-PFV
ZPS30K6E-PFV/TF5/TFD/TFE
ZPS31K6E-PFV
ZPS30LXE-TFE
ZPS31LXE-PFV

SPECIFICATIONS	
ES NO.	DESCRIPTION
ES92-155	CONVERSION-METRIC

NOTES:

1. ALL TOLERANCES ± 1.5 [0.06] UNLESS OTHERWISE SPECIFIED.
2. THE SUCTION TUBE, DISCHARGE TUBE, AND CIRCLE FENCE RADIAL DIMENSIONS ARE TO BE GAUGED FROM THE CENTER OF THE MOUNTING HOLE PATTERN.
3. TUBE ENDS MUST BE PLUGGED.
4. MOUNTING KIT:

GROMMET DUROMETER	4 FOOT KIT
30-35	527-0044-15

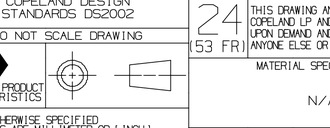

COMPRESSOR WIRING DIAGRAM

SINGLE PHASE MOTOR WITH

INTERNAL PROTECTION

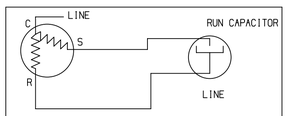

USE COPPER CONDUCTORS ONLY. USE THIS EQUIPMENT ON A GROUNDED SYSTEM ONLY. USE MINIMUM 75° C WIRE FOR AMPACITY DETERMINATION. INTERNAL MOTOR PROTECTION ALLOW THE TIME FOR RESET. OVERCURRENT PROTECTION DEVICE RATING AND TYPE MUST BE IN ACCORDANCE WITH REGULATORY AGENCY END PRODUCT APPROVALS-SEE SYSTEM NAMEPLATE

COMPRESSOR WIRING DIAGRAM

THREE PHASE MOTOR WITH

INTERNAL PROTECTION

USE COPPER CONDUCTORS ONLY. USE THIS ON A GROUNDED SYSTEM ONLY. USE MINIMUM 75° C WIRE FOR AMPACITY. DETERMINATION. INTERNAL MOTOR PROTECTION-ALLOW TIME FOR RESET. PRIMARY SINGLE PHASE FAILURE PROTECTION IS PROVIDED. CRANKCASE HEATER, WHEN APPLIED, MUST BE CONNECTED ONLY TO ITS RATED VOLTAGE. OVERCURRENT PROTECTION DEVICE RATING AND TYPE MUST BE IN ACCORDANCE WITH REGULATORY AGENCY END PRODUCT APPROVALS - SEE SYSTEM NAMEPLATE. TO CORRECT IMPROPER MOTOR ROTATION, SWITCH ANY TWO SUPPLY LINES.

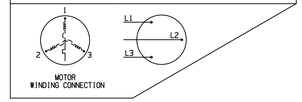

MOTOR WINDING CONNECTION

ECN331652	27	ADD ZPS26/30LXE-PFJ	05-28-25	KH	RAD
ECN330224	26	ADD ZPS30LXE-TFE	01-23-25	RAD	MA
ECN329379	25	ADDED SHT 2 & ADDED MODELS	11-21-24	RAD	MA
ECN001747	0	RELEASED	01-29-10	JPL	EC
ENG NOTICE NO.	REV.NO.	REVISIONS	DATE	BY	CHKD

COPELAND

INTERPRET PER ASME Y14.5M-1994 AND COPELAND DESIGN STANDARDS DS2002

DO NOT SCALE DRAWING

CRITICAL PRODUCT CHARACTERISTICS

UNLESS OTHERWISE SPECIFIED DIMENSIONS ARE MILLIMETER OR [INCH] TOLERANCES: 1-PLACE ± . 2-PLACE ± . ANGULAR ± °

24 (53 FR)

CONFIDENTIALITY NOTICE
THIS DRAWING AND INFORMATION CONTAINED HEREIN ARE THE EXCLUSIVE PROPERTY OF COPELAND LP AND/OR ITS AFFILIATES (COLLECTIVELY "COPELAND") AND SHALL BE RETURNED UPON DEMAND AND SHALL NOT BE REPRODUCED IN WHOLE OR IN PART, DISCLOSED TO ANYONE ELSE OR USED, WITHOUT THE WRITTEN CONSENT OF COPELAND.

MATERIAL SPECIFICATION	DRAWN BY	SUPERSEDES DWG NO / REV NO
N/A	MA	497-0929-00 / 016
	DATE: 07-14-16	SCALE: 1:1
		DATE FORMAT: MM-DD-YY

TITLE	DRAWING NUMBER	SHEET 1 OF 2	DWG
REF DWG-WELD COMP ASSM	497-0929-00		4 SIZE

©COPYRIGHT COPELAND - CONFIDENTIAL

UNCONTROLLED - DO NOT MODIFY

PART NUMBER	A	B
497-0929-00	385.0 - 391.0 [15.16 - 15.39]	359.3 - 365.3 [14.15 - 14.38]
497-0929-01	391.7 - 397.7 [15.42 - 15.66]	366.1 - 372.1 [14.41 - 14.65]

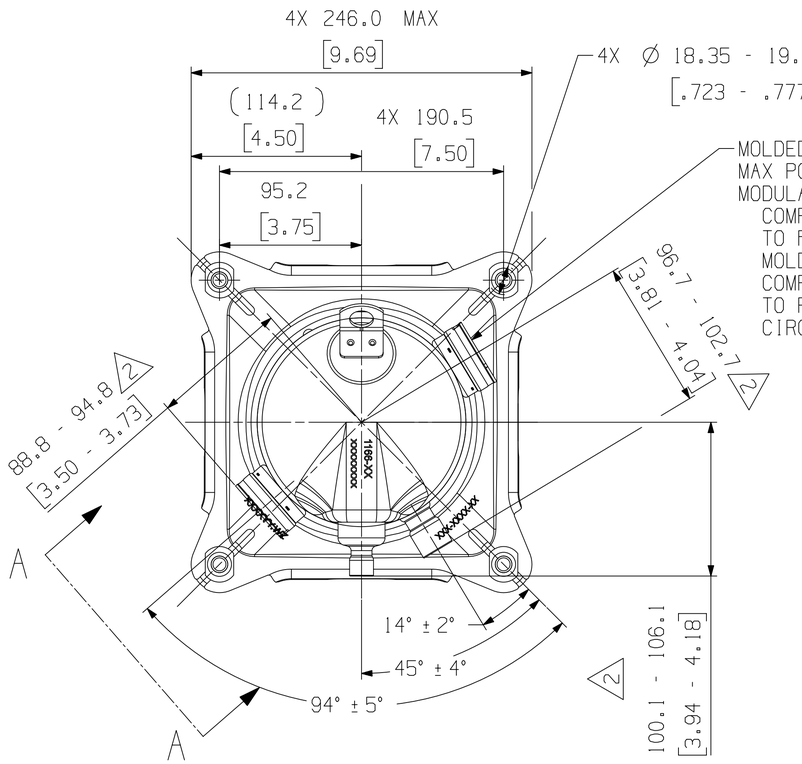

MOLDED PLUG SHOULD BE USED AT ALL TIMES
MAX POWER = 5 VA
MODULATION CONTROL INPUT SPECIFICATIONS:
COMPRESSOR WILL MODULATE FROM PART LOAD
TO FULL LOAD WHEN VOLTAGE SUPPLIED TO
MOLDED PLUG IS 18-28 VDC OR 18-28 VAC RECTIFIED TO VDC
COMPRESSOR WILL MODULATE FROM FULL LOAD
TO PART LOAD WHEN THE CURRENT IN THE
CIRCUIT DROPS BELOW 0.9MA

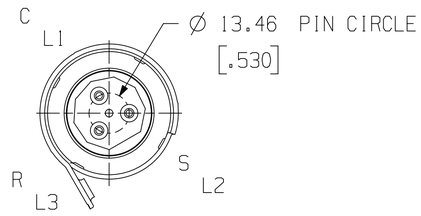

VIEW A - A
SCALE 1:1

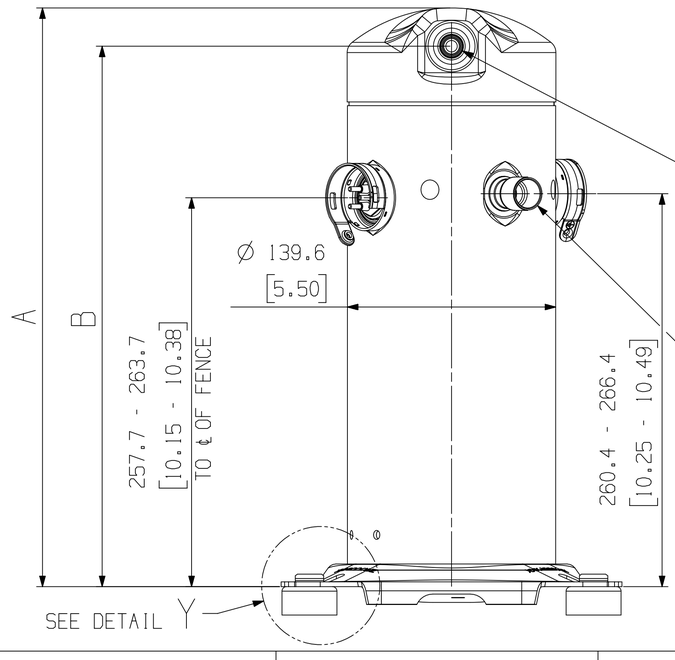

Ø 12.78-12.95 I.D. ◆
[0.503-0.510]
↧ 10.10 [0.398] MIN,
0.038 [0.0015] MIN THICK EXTERIOR AND
0.038 [0.0015] MIN THICK INTERIOR
COPPER PLATED STEEL
DISCHARGE FITTING.

Ø 19.12-19.30 I.D. ◆
[0.753-0.759]
↧ 16.50 [0.650] MIN,
0.038 [0.0015] MIN THICK EXTERIOR AND
0.038 [0.0015] MIN THICK INTERIOR
COPPER PLATED STEEL
SUCTION FITTING

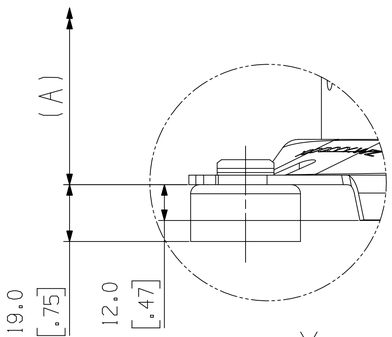

DETAIL Y
SCALE 1:1

ENG NOTICE NO.	REV.NO.	REVISIONS	DATE	BY	CHKD
ECN331652	27	SEE SHEET 1	05-28-25	KH	RAD
ECN330224	26	SEE SHEET 1	01-23-25	RAD	MA
ECN329379	25	ADDED SHT 2 & ADDED MODELS	11-21-24	RAD	MA

COPELAND

INTERPRET PER ASME Y14.5M-1994 AND COPELAND DESIGN STANDARDS DS2002

DO NOT SCALE DRAWING

◆ CRITICAL PRODUCT CHARACTERISTICS

UNLESS OTHERWISE SPECIFIED DIMENSIONS ARE MILLIMETER OR [INCH]
TOLERANCES:
1-PLACE ± .
2-PLACE ± .
ANGULAR ± .

CONFIDENTIALITY NOTICE
THIS DRAWING AND INFORMATION CONTAINED HEREIN ARE THE EXCLUSIVE PROPERTY OF COPELAND LP AND/OR ITS AFFILIATES (COLLECTIVELY "COPELAND") AND SHALL BE RETURNED UPON DEMAND AND SHALL NOT BE REPRODUCED IN WHOLE OR IN PART, DISCLOSED TO ANYONE ELSE OR USED, WITHOUT THE WRITTEN CONSENT OF COPELAND.

24

MATERIAL SPECIFICATION	DRAWN BY	SUPERSEDES DWG NO / REV NO
N/A	MA	497-0929-00 / 016
	DATE 07-14-16	SCALE 1:1
		DATE FORMAT: MM-DD-YY

TITLE: REF DWG-WELD COMP ASSM

DRAWING NUMBER: 497-0929-00 SHEET 2 OF 2 DWG 4 SIZE

©COPYRIGHT COPELAND - CONFIDENTIAL

UNCONTROLLED - DO NOT MODIFY