MODEL NUMBER	18
YAS26K1E-PFJ/PFV/TFD/TF5	
YAS30K1E-PFV/TFD/TFE/TF5	
YAS31K1E-PFV/TFD/TF5	
YPS26K1T-PFV/PFJ/TF5/TFD	
YPS29K1T-PFV/TFD/TFE/TF5	
ZPS26K7E-PFV	
ZPS29K7E-PFV	
ZPS30K7E-PFV/TFD/TFE/TF5	
ZPS31K7E-PFV	
ZPS27LXE-TF5/TFD	
ZPS32LXE-TF5/TFD	
ZPS33LXE-PFV	

SPECIFICATIONS	
ES NO.	DESCRIPTION
ES92-155	CONVERSION-METRIC

NOTES:

1. ALL TOLERANCES ± 1.5 [0.06] UNLESS OTHERWISE SPECIFIED.
2. THE SUCTION TUBE, DISCHARGE TUBE, AND CIRCLE FENCE RADIAL DIMENSIONS ARE TO BE GAUGED FROM THE CENTER OF THE MOUNTING HOLE PATTERN.
3. TUBE ENDS MUST BE PLUGGED.
4. MOUNTING KIT:

GROMMET DUROMETER	4 FOOT KIT
30-35	527-0044-15

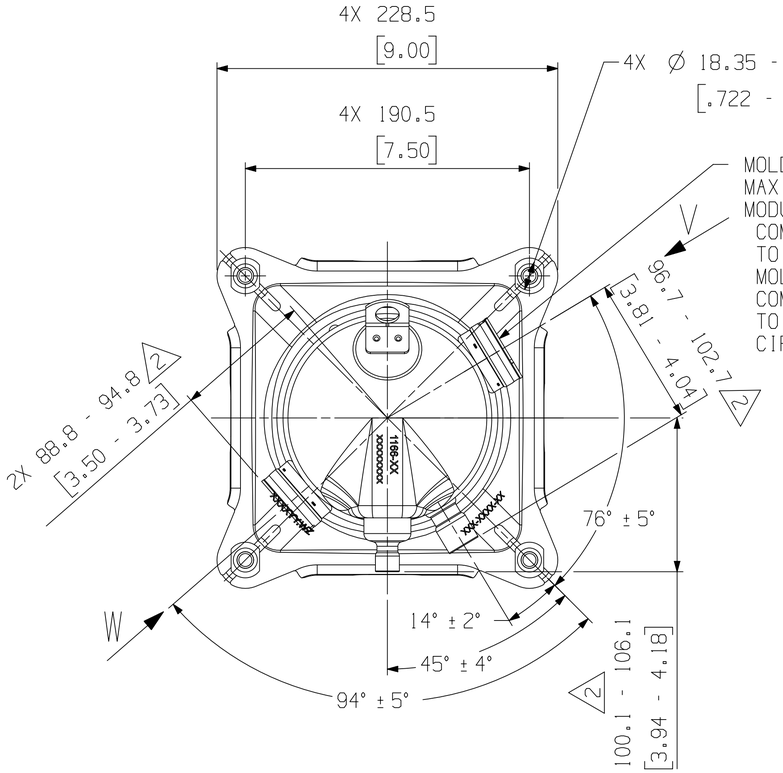

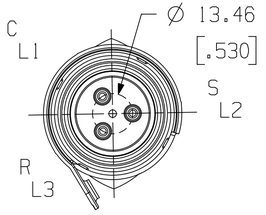

VIEW W
SCALE 1:1

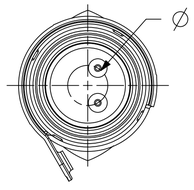

VIEW V
SCALE 1:1

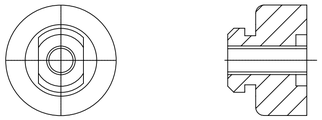

COMPRESSOR WIRING DIAGRAM

SINGLE PHASE MOTOR WITH

INTERNAL PROTECTION

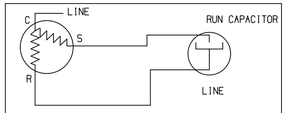

USE COPPER CONDUCTORS ONLY. USE THIS EQUIPMENT ON A GROUNDED SYSTEM ONLY. USE MINIMUM 75° C WIRE FOR AMPACITY DETERMINATION. INTERNAL MOTOR PROTECTION ALLOW THE TIME FOR RESET. OVERCURRENT PROTECTION DEVICE RATING AND TYPE MUST BE IN ACCORDANCE WITH REGULATORY AGENCY END PRODUCT APPROVALS-SEE SYSTEM NAMEPLATE

COMPRESSOR WIRING DIAGRAM

THREE PHASE MOTOR WITH

INTERNAL PROTECTION

USE COPPER CONDUCTORS ONLY. USE THIS ON A GROUNDED SYSTEM ONLY. USE MINIMUM 75° C WIRE FOR AMPACITY. DETERMINATION. INTERNAL MOTOR PROTECTION-ALLOW TIME FOR RESET. PRIMARY SINGLE PHASE FAILURE PROTECTION IS PROVIDED. CRANKCASE HEATER, WHEN APPLIED, MUST BE CONNECTED ONLY TO ITS RATED VOLTAGE. OVERCURRENT PROTECTION DEVICE RATING AND TYPE MUST BE IN ACCORDANCE WITH REGULATORY AGENCY END PRODUCT APPROVALS - SEE SYSTEM NAMEPLATE. TO CORRECT IMPROPER MOTOR ROTATION, SWITCH ANY TWO SUPPLY LINES.

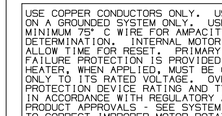

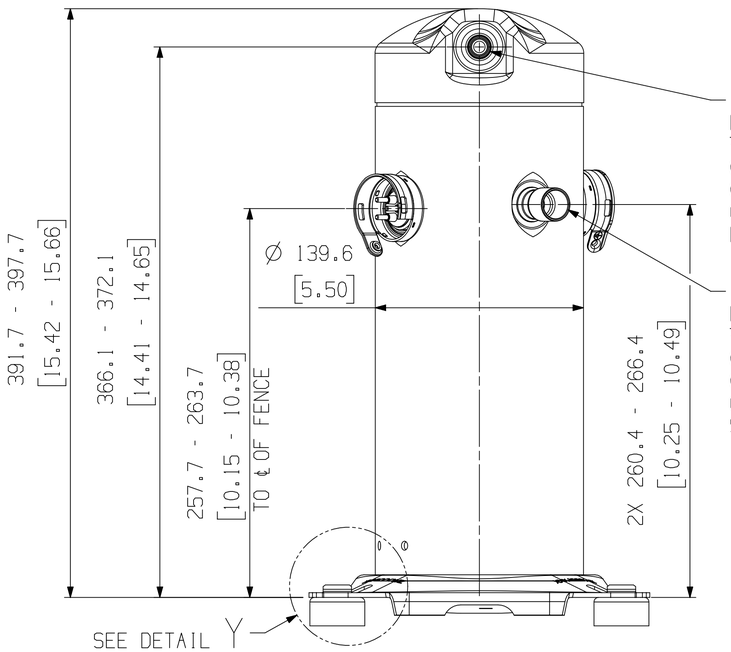

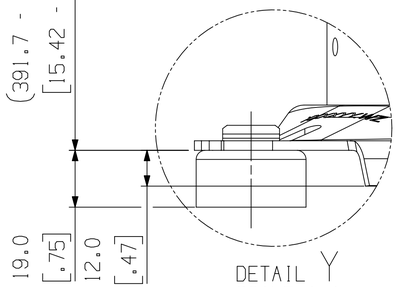

DETAIL Y
SCALE 1:1

ECN	REV.NO.	REVISIONS	DATE	BY	CHKD
ECN330224	18	ADD LXE MODELS	01-22-25	RAD	MA
ECN315987	0	RELEASED	11-11-20	VPV	PBM

24

CONFIDENTIALITY NOTICE

THIS DRAWING AND INFORMATION CONTAINED HEREIN ARE THE EXCLUSIVE PROPERTY OF COPELAND LP AND/OR ITS AFFILIATES (COLLECTIVELY "COPELAND") AND SHALL BE RETURNED UPON DEMAND AND SHALL NOT BE REPRODUCED IN WHOLE OR IN PART, DISCLOSED TO ANYONE ELSE OR USED, WITHOUT THE WRITTEN CONSENT OF COPELAND.

COPELAND

INTERPRET PER ASME Y14.5M-1994 AND COPELAND DESIGN STANDARDS DS2002

DO NOT SCALE DRAWING

CRITICAL PRODUCT CHARACTERISTICS

UNLESS OTHERWISE SPECIFIED
DIMENSIONS ARE MILLIMETER OR [INCH]
TOLERANCES:
1-PLACE ±
2-PLACE ± .
ANGULAR ± °

MATERIAL SPECIFICATION	DRAWN BY	SUPERSEDES DWG NO / REV NO
N/A	KAP	497-3510-00 / 012
	DATE 03-05-24	SCALE 1:1
		DATE FORMAT: MM-DD-YY

TITLE: REF DWG-WELD COMP ASSM

DRAWING NUMBER: 497-3510-00 | SHEET 1 OF 1 | DWG | 4 | SIZE

©COPYRIGHT COPELAND - CONFIDENTIAL

UNCONTROLLED - DO NOT MODIFY