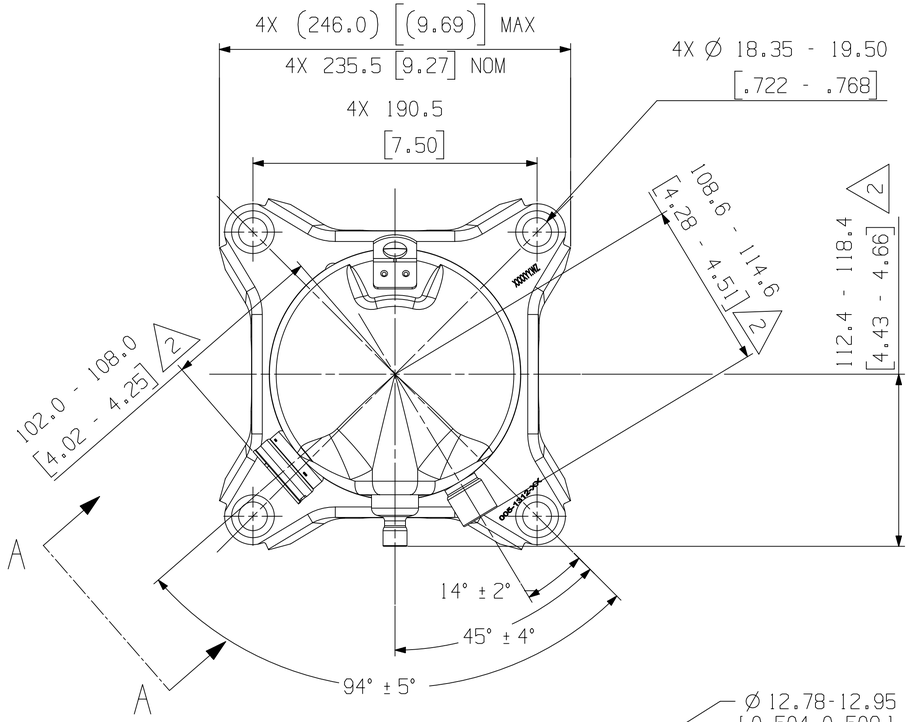

MODEL NUMBER
YA54K1E-PFV/TF5/TFD/TFE/PFJ
YA57K1E-PFV/TF5/TFD/TFE
YA61K1E-PFV/TF5/TF7/TFD/TFE
YA34K2E-PFV
YA49K2E-PFV
YP54K1T-PFV/TF5/TFD/TFE
YP61K1T-PFV/TF5/TFE/TFD
ZP57K5E-PFV/TF5/TF7/TFD/TFE
ZP61K5E-PFV/TF5/TF7/TFD/TFE
ZP57LXE-PFV/TF5/TF7/TFD/TFE (15)

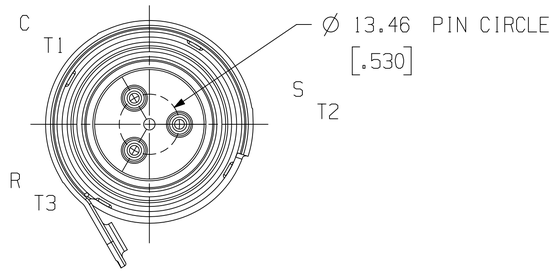

SECTION A - A
SCALE 3:2

SPECIFICATIONS	
ES NO.	DESCRIPTION
ES92-155	CONVERSION-METRIC

NOTES:

1. ALL TOLERANCES ± 1.50 [0.060] UNLESS OTHERWISE SPECIFIED.
2. THE SUCTION TUBE, DISCHARGE TUBE, AND CIRCLE FENCE RADIAL DIMENSIONS ARE TO BE GAUGED FROM THE CENTER OF THE MOUNTING HOLE PATTERN.
3. TUBE ENDS MUST BE PLUGGED.
4. MOUNTING KIT:

GROMMET DUROMETER	4 FOOT KIT
35-45	527-0116-00



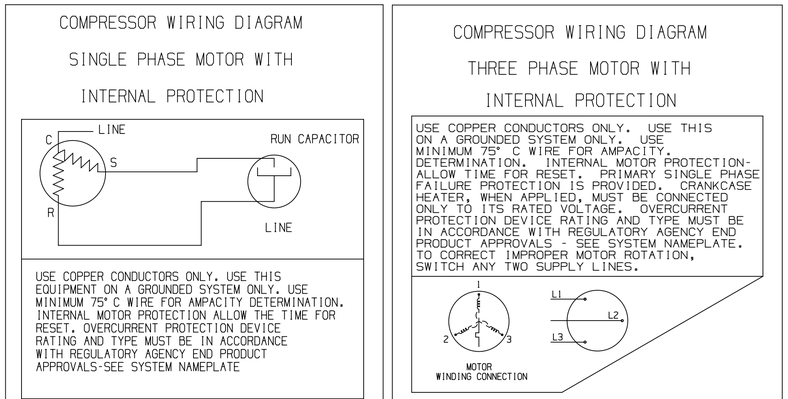

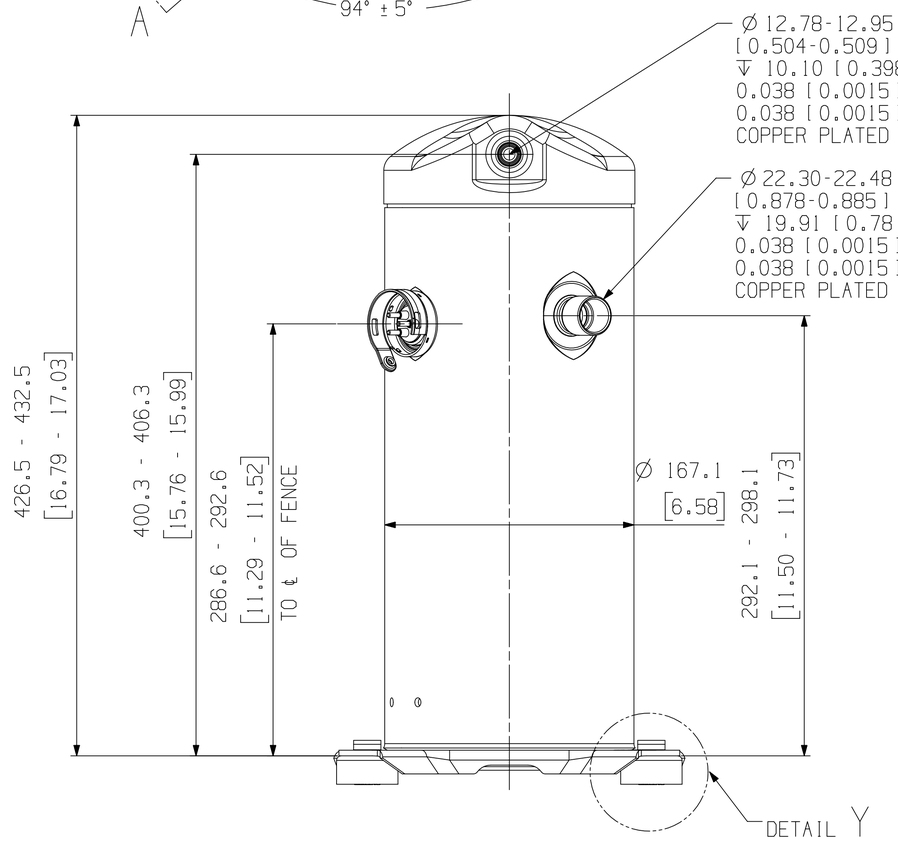

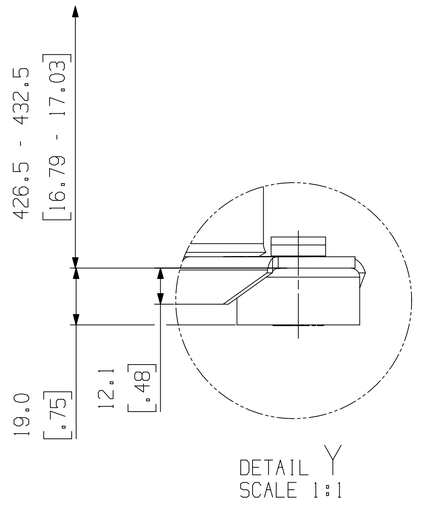

DETAIL Y
SCALE 1:1

ECN330224	15	ADD LXE MODELS	01-22-25	RAD	MA
ECN001877	0	RELEASED	09-20-10	PBM	BR
ENG NOTICE NO.	REV.NO.	REVISIONS	DATE	BY	CHKD

COPELAND

INTERPRET PER ASME Y14.5M-1994 AND COPELAND DESIGN STANDARDS DS2002

DO NOT SCALE DRAWING

◆ CRITICAL PRODUCT CHARACTERISTICS

UNLESS OTHERWISE SPECIFIED DIMENSIONS ARE MILLIMETER OR [INCH] TOLERANCES: 1-PLACE ± 2-PLACE ± ANGULAR ± N/A (1)

CONFIDENTIALITY NOTICE

THIS DRAWING AND INFORMATION CONTAINED HEREIN ARE THE EXCLUSIVE PROPERTY OF COPELAND LP AND/OR ITS AFFILIATES (COLLECTIVELY "COPELAND") AND SHALL BE RETURNED UPON DEMAND AND SHALL NOT BE REPRODUCED IN WHOLE OR IN PART, DISCLOSED TO ANYONE ELSE OR USED, WITHOUT THE WRITTEN CONSENT OF COPELAND.

24 (63 FR)

MATERIAL SPECIFICATION	DRAWN BY	SUPERSEDES DWG NO / REV NO
N/A	JM	497-1000-00 / 003
	DATE 06-14-23	SCALE 1:2
		DATE FORMAT: MM-DD-YY
TITLE	DRAWING NUMBER	SHEET 1 OF 1
REF DWG-WELD COMP ASSM	497-1000-00	DWG 4 SIZE

©COPYRIGHT COPELAND - CONFIDENTIAL