MODEL NUMBER
ZP57K5E-TFD/TF5/TFE/PFV
ZP61K5E-TFD/TF5/TFE/PFV
ZP57LXE-TFD/TF5/TFE ③

SPECIFICATIONS	
ES NO.	DESCRIPTION
ES92-155	CONVERSION-METRIC

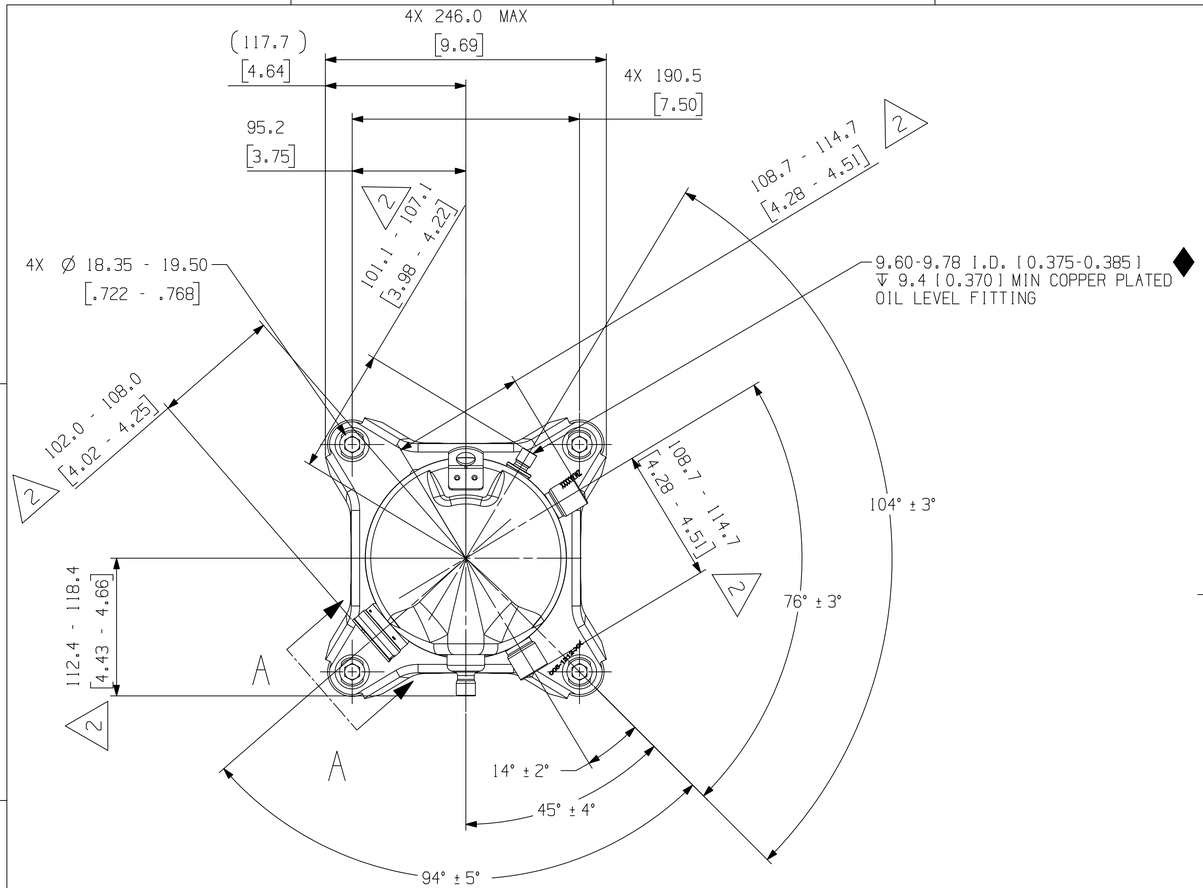

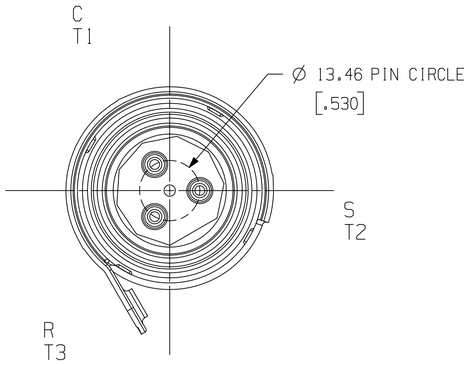

VIEW A - A
SCALE 3:2

NOTES:

1. ALL TOLERANCES ± 1.50 [0.060] UNLESS OTERWISE SPECIFIED.
2. THE SUCTION TUBE, DISCHARGE TUBE OIL LEVEL TUBE AND CIRCLE FENCE RADIAL DIMENSIONS ARE TO BE GAUGED FROM THE CENTER OF THE MOUNTING HOLE PATTERN.
3. TUBES ENDS MUST BE PLUGED.
4. MOUNTING KIT:

GROMMET DUROMETER	4 FOOT KIT
60-70	527-0212-00

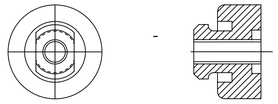

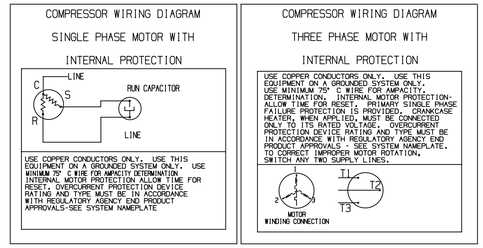

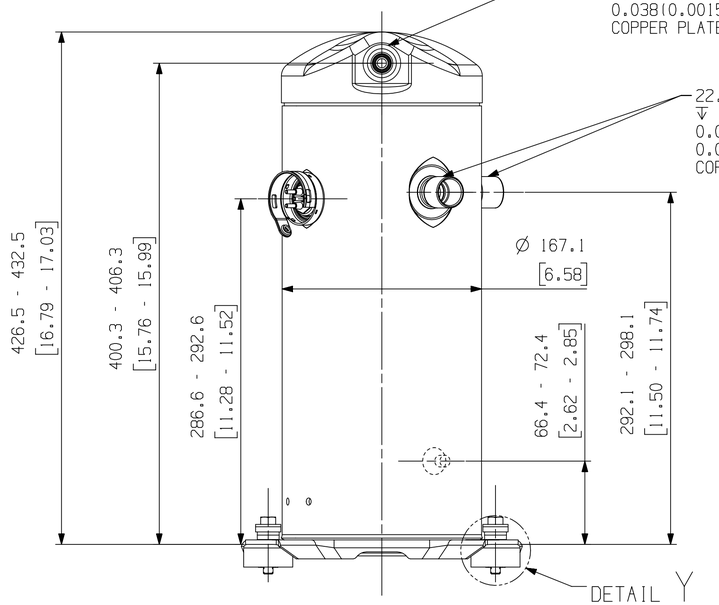

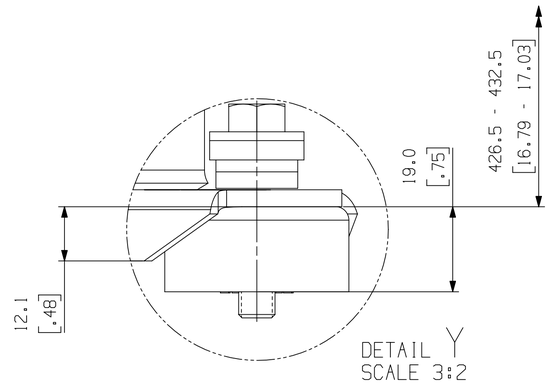

DETAIL Y
SCALE 3:2

ECN330511	3	ADD LXE MODELS	02-10-25	RAD	MA
ECN003889	0	RELEASED	01-20-12	MPK	PNA
ENG NOTICE NO.	REV.NO.	REVISIONS	DATE	BY	CHKD

COPELAND

INTERPRET PER ASME Y14.5M-1994 AND COPELAND DESIGN STANDARDS DS2002

DO NOT SCALE DRAWING

CRITICAL PRODUCT CHARACTERISTICS

UNLESS OTHERWISE SPECIFIED DIMENSIONS ARE MILLIMETER OR [INCH] TOLERANCES: 1-PLACE ± 2-PLACE ± ANGULAR ± ·

CONFIDENTIALITY NOTICE

24 (63FR)

THIS DRAWING AND INFORMATION CONTAINED HEREIN ARE THE EXCLUSIVE PROPERTY OF COPELAND LP AND/OR ITS AFFILIATES (COLLECTIVELY "COPELAND") AND SHALL BE RETURNED UPON DEMAND AND SHALL NOT BE REPRODUCED IN WHOLE OR IN PART, DISCLOSED TO ANYONE ELSE OR USED, WITHOUT THE WRITTEN CONSENT OF COPELAND.

MATERIAL SPECIFICATION	DRAWN BY	SUPERSEDES DWG NO / REV NO
N/A	RAD	497-1318-00 / 002
	DATE: 02-10-25	SCALE: 1:1
		DATE FORMAT: MM-DD-YY
TITLE: REF DWG-WELD COMP ASSM	DRAWING NUMBER: 497-1318-00	SHEET 1 OF 1
		DWG: 4 SIZE

©COPYRIGHT COPELAND - CONFIDENTIAL

UNCONTROLLED - DO NOT MODIFY