MODEL NUMBER
YA34K1E-TF5/TFD/TFE
YA36K1E-TFD/TFE/TF5
YA38K1E-TFD/TFE/TF5
YA40K1E-TFE/TF5/TFD
YA42K1E-TFD/TF5/TFE
YA44K1E-PFV/TF5/TFD/TFE (15) (16)
YA49K1E-PFV/TFD/TFE/TF5 (16)
YA51K1E-PFV/TF5/TFD/TFE (16)
YP34K1T-TF5/TFE/TFD
YP38K1T-TF5
YP40K1T-TF5/TFE/TFD
YP42K1T-TF5/TFE/TFD
ZP34K5E-TFD/TFE/TF5
ZP36K5E-TFD/TFE/TF5
ZP38K5E-TFD/TFE/TF5
ZP39K5E-TFD/TFE/TF5
ZP42K5E-TFD/TFE/TF5
ZP44K5E-PFV/TFD/TFE/TF5
ZP49K5E-PFV/TFD/TFE/TF5
ZP51K5E-PFV/TFD/TFE/TF5
ZP54K5E-PFV/TFD/TFE/TF5/TF7
YP44K1T-TF5/TFD/TFE
YP49K1T-TF5/TFD/TFE
YP51K1T-TF5/TFE/TF7/TFD

SPECIFICATIONS	
ES NO.	DESCRIPTION
ES92-155	CONVERSION-METRIC

NOTES:

(3) 1 ALL TOLERANCES ± 1.5 [0.06] UNLESS OTERWISE SPECIFIED.

(3) 2 THE SUCTION TUBE, DISCHARGE TUBE, OIL EQUALIZER TUBE, GAS EQUALIZER TUBE AND CIRCLE FENCE RADIAL DIMENSIONS ARE TO BE GAUGED FROM THE CENTER OF THE MOUNTING HOLE PATTERN.

3. TUBES ENDS MUST BE PLUGED.

4. MOUNTING KIT:

GROMMET DUROMETER	4 FOOT KIT
60-70	527-0212-00

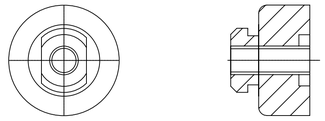

COMPRESSOR WIRING DIAGRAM

SINGLE PHASE MOTOR WITH

INTERNAL PROTECTION

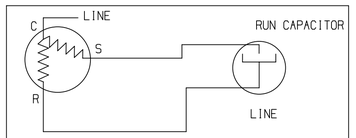

USE COPPER CONDUCTORS ONLY. USE THIS EQUIPMENT ON A GROUNDED SYSTEM ONLY. USE MINIMUM 75° C WIRE FOR AMPACITY DETERMINATION. INTERNAL MOTOR PROTECTION ALLOW THE TIME FOR RESET. OVERCURRENT PROTECTION DEVICE RATING AND TYPE MUST BE IN ACCORDANCE WITH REGULATORY AGENCY END PRODUCT APPROVALS-SEE SYSTEM NAMEPLATE

COMPRESSOR WIRING DIAGRAM

THREE PHASE MOTOR WITH

INTERNAL PROTECTION

USE COPPER CONDUCTORS ONLY. USE THIS ON A GROUNDED SYSTEM ONLY. USE MINIMUM 75° C WIRE FOR AMPACITY. DETERMINATION. INTERNAL MOTOR PROTECTION-ALLOW TIME FOR RESET. PRIMARY SINGLE PHASE FAILURE PROTECTION IS PROVIDED. CRANKCASE HEATER, WHEN APPLIED, MUST BE CONNECTED ONLY TO ITS RATED VOLTAGE. OVERCURRENT PROTECTION DEVICE RATING AND TYPE MUST BE IN ACCORDANCE WITH REGULATORY AGENCY END PRODUCT APPROVALS - SEE SYSTEM NAMEPLATE. TO CORRECT IMPROPER MOTOR ROTATION, SWITCH ANY TWO SUPPLY LINES.

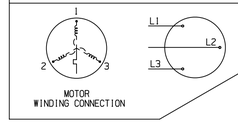

ENG NOTICE NO.	REV.NO.	REVISIONS	DATE	BY	CHKD
ECN329867	16	ADD YA44/49/51K1E-PFV	12-10-24	RAD	MA
ECN328924	15	REDRAWN , ADDED YA44K1E-TF5	09-11-24	MA	TM
ECN100971	0	RELEASED	03-20-15	MA	PBM

CONFIDENTIALITY NOTICE

THIS DRAWING AND INFORMATION CONTAINED HEREIN ARE THE EXCLUSIVE PROPERTY OF COPELAND LP AND/OR ITS AFFILIATES (COLLECTIVELY "COPELAND") AND SHALL BE RETURNED UPON DEMAND AND SHALL NOT BE REPRODUCED IN WHOLE OR IN PART, DISCLOSED TO ANYONE ELSE OR USED, WITHOUT THE WRITTEN CONSENT OF COPELAND.

COPELAND

INTERPRET PER ASME Y14.5M-1994 AND COPELAND DESIGN STANDARDS DS2002

DO NOT SCALE DRAWING

CRITICAL PRODUCT CHARACTERISTICS

UNLESS OTHERWISE SPECIFIED DIMENSIONS ARE MILLIMETER OR [INCH] TOLERANCES: 1-PLACE ± 2-PLACE ± ANGULAR ± (1)

24 (63 FR)

MATERIAL SPECIFICATION: N/A

DRAWN BY: MA

DATE: 09-11-24

SUPERSEDES DWG NO / REV NO: 497-1788-00 / 014

SCALE: 1:2

DATE FORMAT: MM-DD-YY

TITLE: REF DWG-WELD COMP ASSM

DRAWING NUMBER: 497-1788-00

SHEET 1 OF 2

DWG SIZE: 4

©COPYRIGHT COPELAND - CONFIDENTIAL

UNCONTROLLED - DO NOT MODIFY

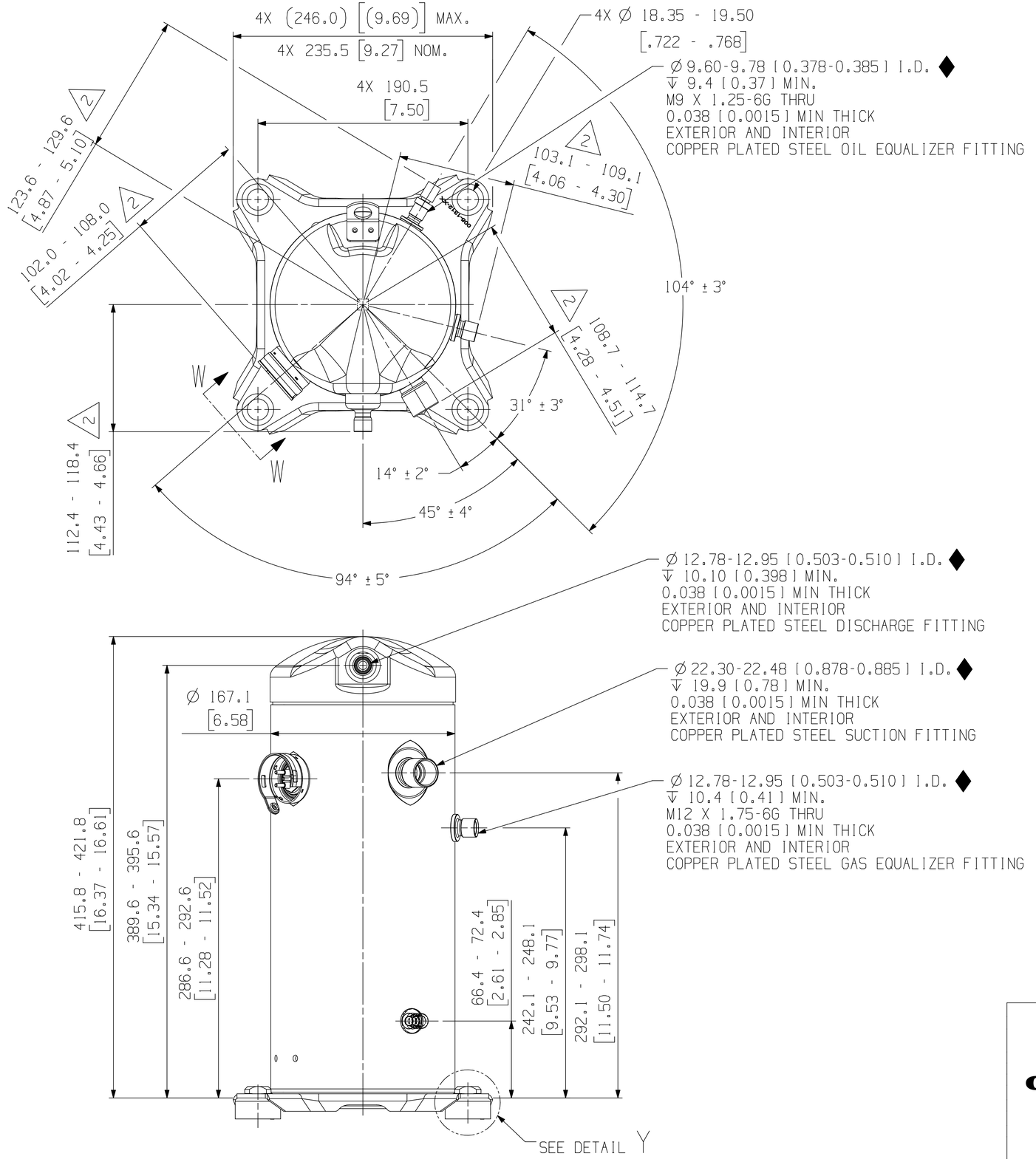

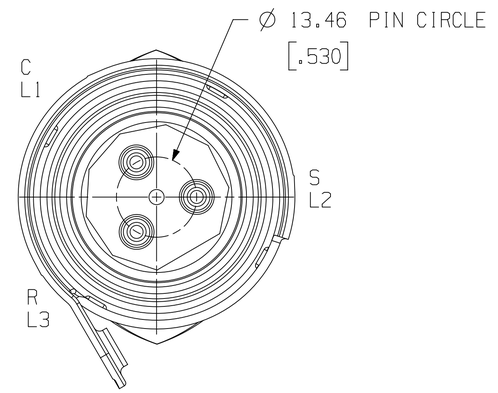

VIEW W
SCALE 2:1

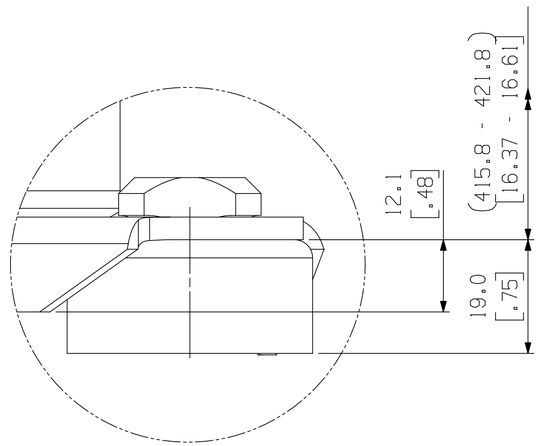

DETAIL Y
SCALE 2:1

ECN329867	16	SEE SHEET 1	12-10-24	RAD	MA
ECN328924	15	REDRAWN, SEE SHEET 1	09-11-24	MA	TM
ECN100971	0	RELEASED	03-20-15	MA	PBM
ENG NOTICE NO.	REV.NO.	REVISIONS	DATE	BY	CHKD

COPELAND

INTERPRET PER ASME Y14.5M-1994 AND COPELAND DESIGN STANDARDS DS2002

DO NOT SCALE DRAWING

◆ CRITICAL PRODUCT CHARACTERISTICS

UNLESS OTHERWISE SPECIFIED
DIMENSIONS ARE MILLIMETER OR [INCH]
TOLERANCES:
1-PLACE ±
2-PLACE ± .
ANGULAR ± .

CONFIDENTIALITY NOTICE

24 (63 FR)

THIS DRAWING AND INFORMATION CONTAINED HEREIN ARE THE EXCLUSIVE PROPERTY OF COPELAND LP AND/OR ITS AFFILIATES (COLLECTIVELY "COPELAND") AND SHALL BE RETURNED UPON DEMAND AND SHALL NOT BE REPRODUCED IN WHOLE OR IN PART, DISCLOSED TO ANYONE ELSE OR USED, WITHOUT THE WRITTEN CONSENT OF COPELAND.

MATERIAL SPECIFICATION	DRAWN BY	SUPERSEDES DWG NO / REV NO
N/A	MA	497-1788-00 / 014
	DATE 09-11-24	SCALE 1:1
		DATE FORMAT: MM-DD-YY

TITLE: REF DWG-WELD COMP ASSM

DRAWING NUMBER: 497-1788-00 SHEET 2 OF 2 DWG 4 SIZE

©COPYRIGHT COPELAND - CONFIDENTIAL

UNCONTROLLED - DO NOT MODIFY