PART NUMBER	MODEL NUMBER	CUSTOMER CONNECTIONS				
		BRAZED FITTINGS	OEL FITTING	GEL FITTING	SIGHT GLASS	
497-3617-00	YA91KIE YA83KIE YA76KIE YA67KIE	USE	USE	USE	OMIT	
497-3617-01	YA91KIE YA83KIE YA76KIE YA67KIE	USE	OMIT	OMIT	OMIT	2
497-3617-02	YA91KIE YA83KIE YA76KIE YA67KIE	USE	USE	OMIT	USE	3

SPECIFICATIONS	
ES NO.	DESCRIPTION
ES92-155	CONVERSION-METRIC

NOTES:

1. ALL TOLERANCES ± 1.50 [0.060] UNLESS OTHERWISE SPECIFIED.

   DUE TO ACCUMULATED ASSEMBLY TOLERANCES THE LISTED COMPONENTS MAY VARY FROM THE MOUNTING HOLES AS SHOWN BELOW:

   ◆ ALL FITTINGS : ± 3.0 [0.12]

2. SPACER MOUNTING ASSM PER BOM.

3. TUBE ENDS MUST BE PLUGGED.

1

COMPRESSOR WIRING DIAGRAM

THREE PHASE MOTOR WITH

INTERNAL PROTECTION

USE COPPER CONDUCTORS ONLY. USE THIS ON A GROUNDED SYSTEM ONLY. USE MINIMUM 75° C WIRE FOR AMPACITY. DETERMINATION. INTERNAL MOTOR PROTECTION-ALLOW TIME FOR RESET. PRIMARY SINGLE PHASE FAILURE PROTECTION IS PROVIDED. CRANKCASE HEATER, WHEN APPLIED, MUST BE CONNECTED ONLY TO ITS RATED VOLTAGE. OVERCURRENT PROTECTION DEVICE RATING AND TYPE MUST BE IN ACCORDANCE WITH REGULATORY AGENCY END PRODUCT APPROVALS - SEE SYSTEM NAMEPLATE. TO CORRECT IMPROPER MOTOR ROTATION, SWITCH ANY TWO SUPPLY LINES.

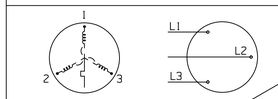

MOTOR
WINDING CONNECTION

ENG NOTICE NO.	REV.NO.	REVISIONS	DATE	BY	CHKD
ECN325041	3	RELEASE -02	08-11-23	EZ	EL
ECN314812	2	ADDED -01	10-14-22	JXD	EL
ECN314812	1	REMOVED NOTE 4	01-07-22	JXD	EL
ECN314812	0	RELEASED	06-28-21	JXD	EL

CONFIDENTIALITY NOTICE

THIS DRAWING AND INFORMATION CONTAINED HEREIN ARE THE EXCLUSIVE PROPERTY OF COPELAND LP AND/OR ITS AFFILIATES (COLLECTIVELY "COPELAND") AND SHALL BE RETURNED UPON DEMAND AND SHALL NOT BE REPRODUCED IN WHOLE OR IN PART, DISCLOSED TO ANYONE ELSE OR USED, WITHOUT THE WRITTEN CONSENT OF COPELAND.

0

COPELAND

INTERPRET PER ASME Y14.5M-1994 AND COPELAND DESIGN STANDARDS DS2002

DO NOT SCALE DRAWING

CRITICAL PRODUCT CHARACTERISTICS

UNLESS OTHERWISE SPECIFIED DIMENSIONS ARE MILLIMETER OR [INCH]
TOLERANCES:
1-PLACE ± N/A
2-PLACE ± N/A
ANGULAR ± N/A°

1

MATERIAL SPECIFICATION	DRAWN BY	SUPERSEDES DWG NO / REV NO
N/A	JXD	/
	DATE: 06-28-21	SCALE: 1:2
		DATE FORMAT: MM-DD-YY

TITLE: REF DWG-WELD COMP ASSM

DRAWING NUMBER: 497-3617-00 | SHEET 1 OF 2 | DWG 4 SIZE

©COPYRIGHT COPELAND - CONFIDENTIAL

UNCONTROLLED - DO NOT MODIFY

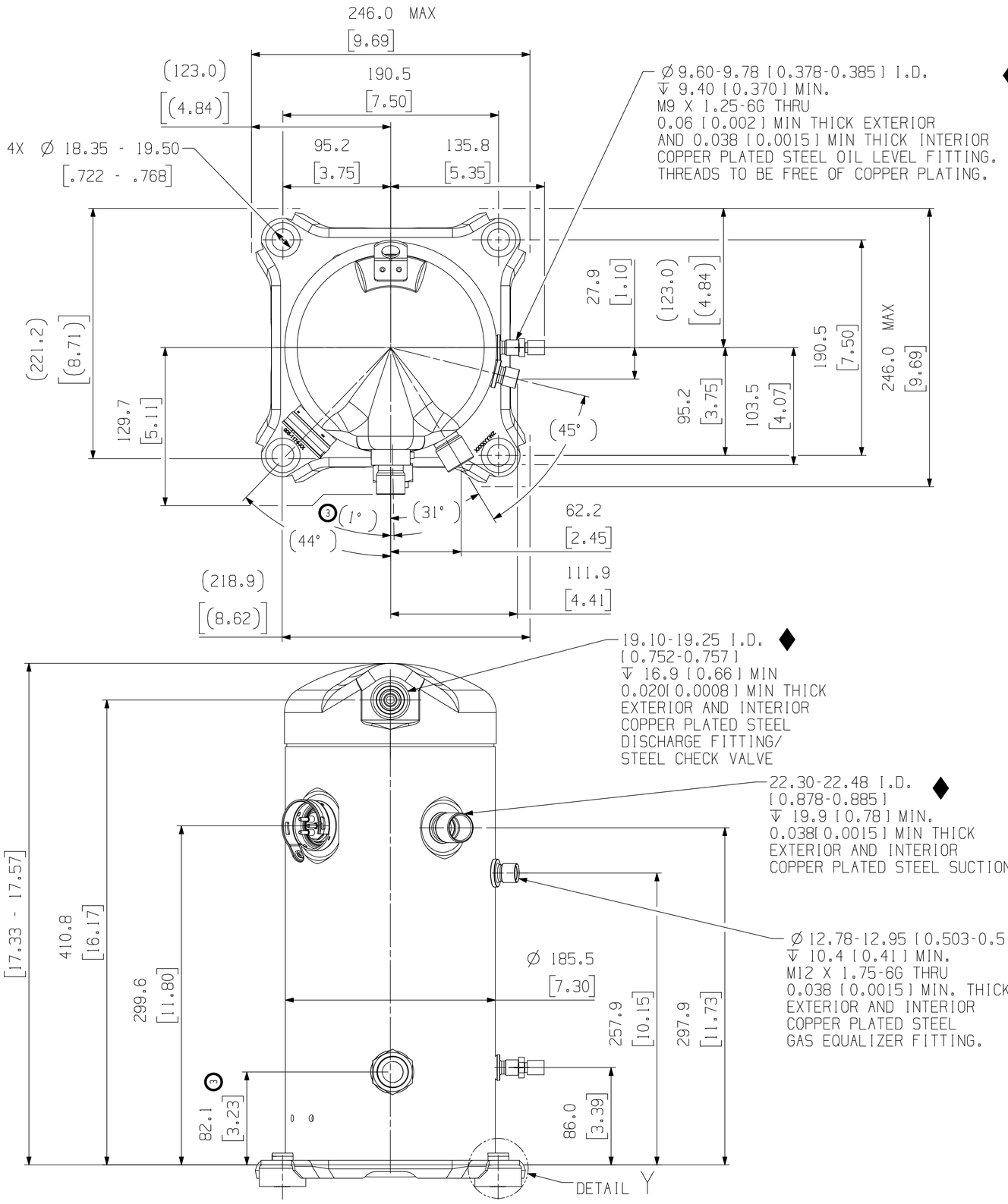

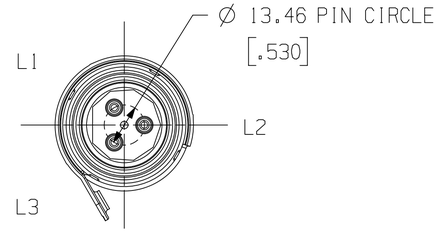

MOLDED PLUG LAYOUT
STANDARD
SCALE 1:1

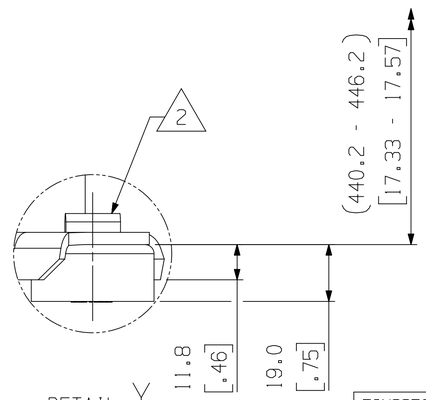

DETAIL Y
SCALE 1:1

ENG NOTICE NO.	REV.NO.	REVISIONS	DATE	BY	CHKD
ECN325041	3	RELEASE -02	08-11-23	EZ	EL
ECN314812	2	ADDED -01	10-14-22	JXD	EL
ECN314812	1	SEE SHEET 1	01-07-22	JXD	EL
ECN314812	0	RELEASED	06-28-21	JXD	EL

CONFIDENTIALITY NOTICE
THIS DRAWING AND INFORMATION CONTAINED HEREIN ARE THE EXCLUSIVE PROPERTY OF COPELAND LP AND/OR ITS AFFILIATES (COLLECTIVELY "COPELAND") AND SHALL BE RETURNED UPON DEMAND AND SHALL NOT BE REPRODUCED IN WHOLE OR IN PART, DISCLOSED TO ANYONE ELSE OR USED, WITHOUT THE WRITTEN CONSENT OF COPELAND.

0

COPELAND

INTERPRET PER ASME Y14.5M-1994 AND COPELAND DESIGN STANDARDS DS2002

DO NOT SCALE DRAWING

CRITICAL PRODUCT CHARACTERISTICS

UNLESS OTHERWISE SPECIFIED
DIMENSIONS ARE MILLIMETER OR [INCH]
TOLERANCES:
1-PLACE ± N/A
2-PLACE ± N/A
ANGULAR ± N/A°

1

MATERIAL SPECIFICATION: N/A

DRAWN BY: JXD

DATE: 06-28-21

SUPERSEDES DWG NO / REV NO: /

SCALE: 1:1

DATE FORMAT: MM-DD-YY

TITLE: REF DWG-WELD COMP ASSM

DRAWING NUMBER: 497-3617-00

SHEET 2 OF 2

DWG SIZE: 4

©COPYRIGHT COPELAND - CONFIDENTIAL

UNCONTROLLED - DO NOT MODIFY