58TN0B / 58TN1B

80% AFUE, Two-Stage, Variable–Speed 4–Way Multipoise, Non-Condensing Gas Furnace

Installation, Start–Up, Operating and Service and Maintenance Instructions

NOTE: Read the entire instruction manual before starting the installation.

TABLE OF CONTENTS

Table 1 – Dimensions 2
SAFETY CONSIDERATIONS 3
INTRODUCTION 4
CODES AND STANDARDS 5
ELECTROSTATIC DISCHARGE (ESD) PRECAUTIONS PROCEDURE 5
LOCATION 6
Table 2 – Minimum Free Area Required for Each Combustion Air opening of Duct to Outdoors 8
Table 3 – Minimum Space Volumes for 100% Combustion, Ventilation, and Dilution from Indoors 8
INSTALLATION 9
Table 4 – Opening Dimensions - In. (mm) 11
FILTER ARRANGEMENT 12
Table 5 – Optional Filter Media Pressure Drop (Clean) Versus Face Velocity- in. w.c. (Pa) 14
Table 6 – Optional Filter Media Pressure Drop (Clean) Versus Airflow - in. w.c. (Pa) 14
Table 7 – Air Filter Selection and Duct Sizing - In. (mm) 14
AIR DUCTS 14
GAS PIPING 15
Table 8 – Maximum Capacity of Pipe 16
ELECTRICAL CONNECTIONS 17
Table 9 – Electrical Data 18
TEMPERATURE SENSOR 19
VENTING 21
Table 10 – Combined Appliance Maximum Input Rating in Thousands of BTUh per Hour 23
Table 11 – Minimum Allowable Input Rating of Space-Heating Appliance in Thousands of BTUh per Hour 23
Table 12 – Recommended Minimum Vent Height Per Furnace and Vent Orientation 24
AIRFLOW DELIVERY - CFM 27
Table 13 – 045C17--12 Airflow in CFM 27
Table 14 – 070C14--12 Airflow in CFM 28
Table 15 – 070C17--16 Airflow in CFM 28
Table 16 – 070C21--20 Airflow in CFM 29
Table 17 – 090C17--16 Airflow in CFM 29
Table 18 – 090C21--20 Airflow in CFM 30
Table 19 – 110C21--20 Airflow in CFM 30
Table 20 – 135C24--22 Airflow in CFM 31
FURNACE CONTROL PROGRAMMING AND NAVIGATION 31
Table 21 – System Status Display Codes 31
Table 22 – Main Menu Options 32
SERVICE LABEL 33
START-UP, ADJUSTMENT, AND SAFETY CHECK 34
Table 23 – Test Sequence 34
WIRING DIAGRAM 35
Table 24 – Altitude Derate Multiplier for U.S.A. 36
Table 25 – Gas Rate (CU ft./hr.) 37
Table 26 – Orifice Size and Manifold Pressure (in. w.c.) for Gas Input Rate 37
Table 27 – Orifice Size and Manifold Pressure (in. w.c.) for Gas Input Rate 39
SERVICE AND MAINTENANCE PROCEDURES 41
ELECTRICAL CONTROLS AND WIRING 42
CARE AND MAINTENANCE 42
Table 28 – Filter Size Information - In. (mm) 43
SEQUENCE OF OPERATION 46
PARTS REPLACEMENT INFORMATION GUIDE 52
EXAMPLE OF MODEL NUMBER 52
TRAINING 52

To learn more about this appliance and installation via a mobile device, go to https://carrier.hvacpartners.com/NFC or use the QR code below. To access airflow tables or troubleshooting guide on your mobile device go to mlctraining.com/training/techdocs/95/ or use the QR code below.

Mobile App QR Code

Airflow QR Code

A230297

⚠ WARNING

CARBON MONOXIDE POISONING HAZARD

Failure to follow this warning could result in personal injury and/or death.

Carbon Monoxide (CO) is a colorless, odorless, and tasteless poisonous gas that can be fatal when inhaled. Follow all installation, maintenance, and service instructions. See additional information below regarding the installation of a CO Alarm.

Most states in the USA and jurisdictions in Canada have laws that require the use of Carbon Monoxide (CO) alarms with fuel burning products. Examples of fuel burning products are furnaces, boilers, space heaters, generators, water heaters, stoves/ranges, clothes dryers, fireplaces, incinerators, automobiles, and other internal combustion engines. Even if there are no laws in your jurisdiction requiring a CO Alarm, it's highly recommended that whenever any fuel burning product is used in or around the home or business that the dwelling be equipped with a CO Alarm(s). The Consumer Product Safety Commission recommends the use of CO Alarm(s). The CO Alarm(s) must be installed, operated, and maintained according to the CO Alarm manufacturer's instructions. For more information about Carbon Monoxide, local laws, or to purchase a CO Alarm online, please visit the following website. https://www.kidde.com.

Use of the AHRI Certified TM Mark indicates a manufacturer's participation in the program. For verification of certification for individual products, go to www.ahridirectory.org .

ISO 9001 Quality

A200103

Portions of the text and tables are reprinted from NFPA 54/ANSI Z223.1E, with permission of National Fire Protection Association, Quincy, MA 02269 and American Gas Association, Washington DC 20001. This reprinted material is not the complete and official position of the NFPA or ANSI on the referenced subject, which is represented only by the standard in its entirety.

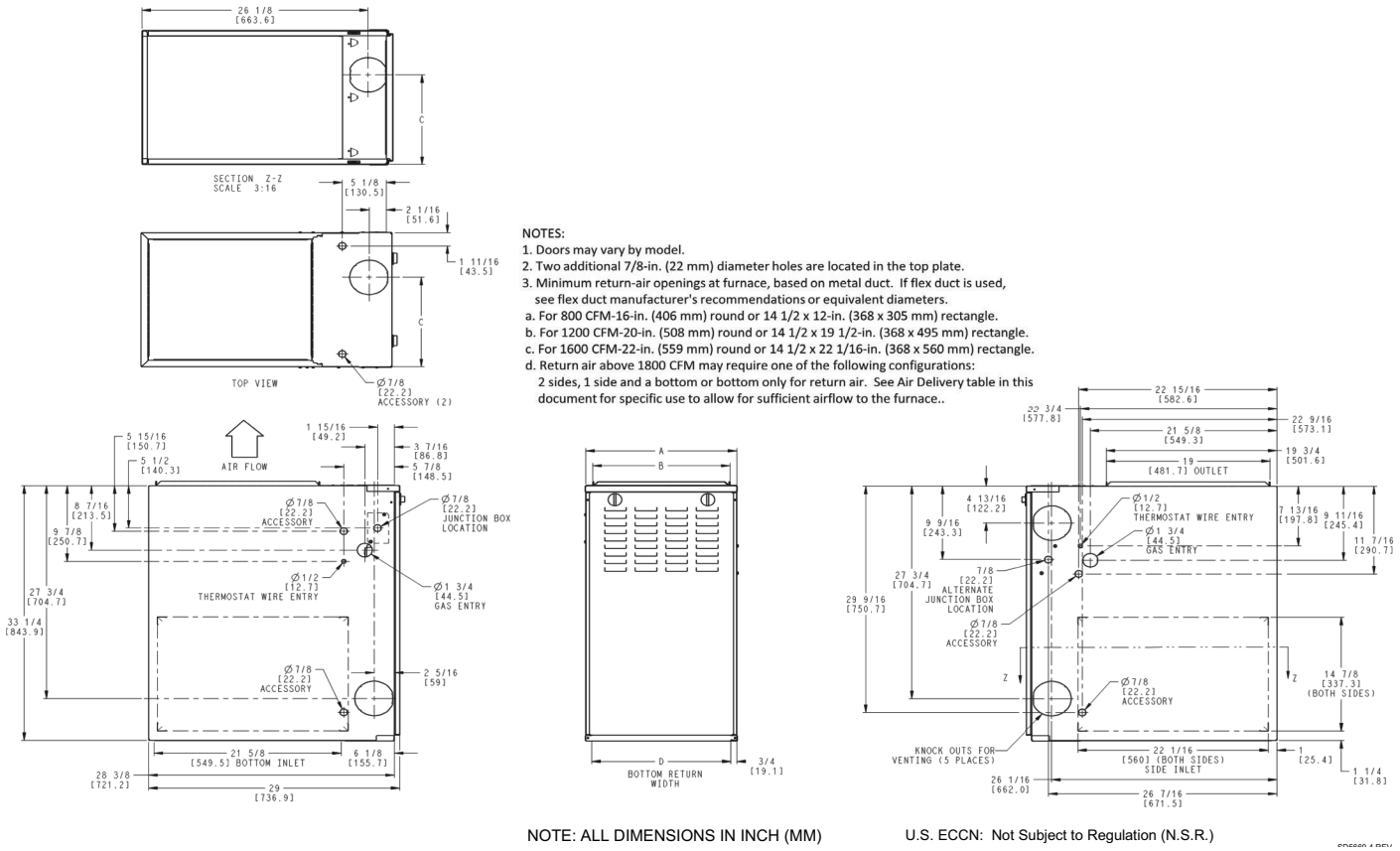

A210785

Fig. 1 – Dimensional Drawing

Table 1 – Dimensions

FURNACE SIZE	A	B	C	D	VENT CONNECTION SIZE	SHIP WT. LB (KG)
	CABINET WIDTH	OUTLET WIDTH	TOP AND BOTTOM FLUE COLLAR	BOTTOM INLET WIDTH		
045C17--12	17-1/2 (445)	15-7/8 (403)	11-9/16 (294)	16 (406)	4 (102)	122.5 (55.6)
070C14--12	14-3/16 (360)	12-9/16 (319)	9-5/16 (237)	12-11/16 (322)	4 (102)	119.5 (54.2)
070C17--16	17-1/2 (445)	15-7/8 (403)	11-9/16 (294)	16 (406)	4 (102)	132 (59.9)
070C21--20	21 (533)	19-3/8 (492)	13-5/16 (338)	19-1/2 (495)	4 (102)	137 (62.1)
090C17--16	17-1/2 (445)	15-7/8 (403)	11-9/16 (294)	16 (406)	4 (102)	134.5 (61.0)
090C21--20	21 (533)	19-3/8 (492)	13-5/16 (338)	19-1/2 (495)	4 (102)	147.5 (66.9)
110C21--20	21 (533)	19-3/8 (492)	13-5/16 (338)	19-1/2 (495)	4 (102)	152 (68.9)
135C24--22	24-1/2 (622)	22-7/8 (581)	15-1/16 (383)	23 (584)	4 (102)*	174.5 (79.2)

*. 135 size furnace require a 5 or 6-in. (127 or 152 mm) vent. Use a vent adapter between furnace and vent stack. See Installation Instructions for complete installation requirements.

SAFETY CONSIDERATIONS

⚠ WARNING

FIRE, INJURY, OR DEATH HAZARD

Failure to follow this warning could result in property damage, personal injury, or death.

This furnace was manufactured to operate with natural gas. When fuel supply is Liquid Propane (LP), this furnace must be converted with a factory approved LP conversion kit. See furnace rating plate for approved conversion kit.

⚠ WARNING

FIRE, EXPLOSION, ELECTRICAL SHOCK, AND CARBON MONOXIDE POISONING HAZARD

Failure to follow this warning could result in dangerous operation, personal injury, death, or property damage.

Improper installation, adjustment, alteration, service, maintenance, or use can cause carbon monoxide poisoning, explosion, fire, electrical shock, or other conditions which may cause personal injury or property damage. Consult a qualified service agency, local gas supplier, or your distributor or branch for information or assistance. The qualified service agency must use only factory-authorized accessories and replacement parts when installing and servicing this product.

⚠ CAUTION

FURNACE RELIABILITY HAZARD

Failure to follow this caution may result in unit component damage.

Application of this furnace should be indoors with special attention given to vent sizing and material, gas input rate, air temperature rise, unit leveling, and unit sizing.

Installing and servicing heating equipment can be hazardous due to gas and electrical components. Only trained and qualified personnel should install, repair, or service heating equipment. Untrained personnel can perform basic maintenance functions such as cleaning and replacing air filters. All other operations must be performed by trained service personnel. When working on heating equipment, observe precautions in literature, on tags, and on labels attached to or shipped with furnace and other safety precautions that may apply.

These instructions cover minimum requirements and conform to existing national standards and safety codes. In some instances, these instructions exceed certain local codes and ordinances, especially those that may not have kept up with changing residential construction practices. We require these instructions as a minimum for a safe installation.

⚠ WARNING

FIRE, INJURY, OR DEATH HAZARD

Failure to follow this warning could result in property damage, personal injury, or death.

Do not bypass any of the safety controls in the furnace, including but not limited to the main limit switch, rollout or burner thermal switch, and pressure switch/pressure transducer.

Wear safety glasses, protective clothing and work gloves. Have fire extinguisher available during start-up and adjustment procedures and service calls.

This is the safety-alert symbol ⚠. When you see this symbol on the furnace and in instructions or manuals, be alert to the potential for personal injury.

Understand the signal words DANGER, WARNING, and CAUTION. These words are used with the safety-alert symbol. DANGER identifies the most serious hazards which will result in severe personal injury or death. WARNING signifies a hazard which could result in personal injury or death. CAUTION is used to identify hazards which may result in minor personal injury or product and property damage. NOTE is used to highlight suggestions which will result in enhanced installation, reliability, or operation.

⚠ CAUTION

CUT HAZARD

Failure to follow this caution may result in personal injury.

Sheet metal parts may have sharp edges or burrs. Use care and wear appropriate protective clothing, safety glasses and gloves when handling parts, and servicing furnaces.

The following additional safety considerations should be followed for gas furnaces:

1. Use only with type of gas approved for this furnace. Refer to the furnace rating plate.
2. Install this furnace only in a location and position as specified in the “Location” section of these instructions.
3. Provide adequate combustion and ventilation air to the furnace space as specified in “Air for Combustion and Ventilation” section.
4. Combustion products must be discharged outdoors. Connect this furnace to an approved vent system only, as specified in the “Venting” section of these instructions.
5. Never test for gas leaks with an open flame. Use a commercially available soap solution made specifically for the detection of leaks to check all connections, as specified in the “Gas Piping” section.
6. Always install furnace to operate within the furnace’s intended temperature-rise range with a duct system which has an external static pressure within the allowable range, as specified in the “Start-Up, Adjustments, and Safety Check” section. See furnace rating plate.
7. When a furnace is installed so that supply ducts carry air circulated by the furnace to areas outside the space containing the furnace, the return air shall also be handled by duct(s) sealed to the furnace casing and terminating outside the space containing the furnace. See “Air Ducts” section.
8. A gas-fired furnace for installation in a residential garage must be installed as specified in the warning box in the “Location” section.
9. The furnace may be used for construction heat provided that the furnace installation and operation complies with the first CAUTION in the LOCATION section of these instructions.
10. These Multipoise Gas-Fired Furnaces are CSA (formerly A.G.A. and C.G.A.) design-certified for use with natural and propane gases (see furnace rating plate) and for installation in alcoves, attics, basements, closets, utility rooms, crawlspaces, and garages. The furnace is factory-shipped for use with natural gas. A CSA (A.G.A. and C.G.A.) listed accessory gas conversion kit is required to convert furnace for use with propane gas.
11. See Fig. 2 for required clearances to combustible construction.
12. Maintain a 1-in. (25 mm) clearance from combustible materials to supply air ductwork for a distance of 36 in. (914 mm) horizontally from the furnace. See NFPA 90B or local code for further requirements.

13. These furnaces SHALL NOT be installed directly on carpeting, tile, or any other combustible material other than wood flooring. In downflow installations, factory accessory floor base MUST be used when installed on combustible materials and wood flooring. Special base is not required when this furnace is installed on manufacturer's cased evaporator coils or when manufacturer's evaporator coil casing is used, See Fig. 2 for clearance to combustible construction information.

INTRODUCTION

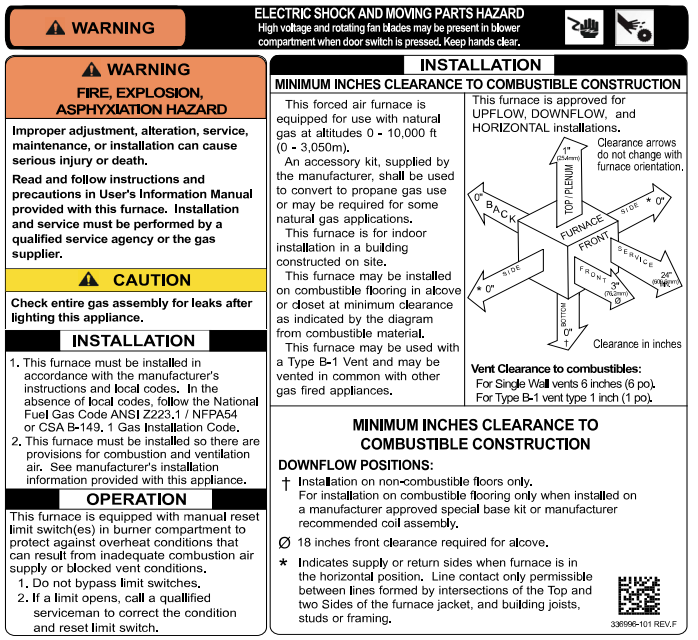

A220231

Fig. 2 – Clearances to Combustibles

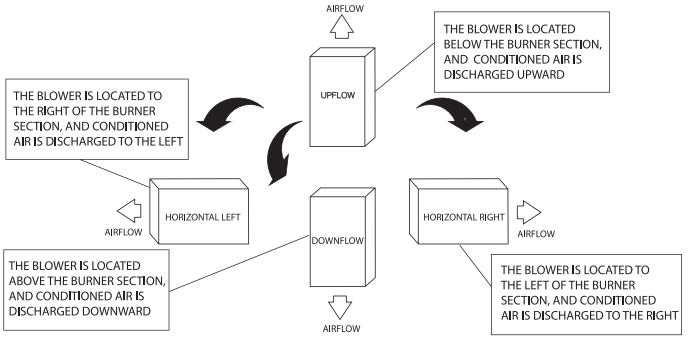

A02097

Fig. 3 – Multipoise Orientations

The 4-way multipoise Category I fan-assisted furnace is CSA (formerly A.G.A. and C.G.A.) design-certified. A Category I fan-assisted furnace is an appliance equipped with an integral mechanical means to either draw or force products of combustion through the combustion chamber and/or heat exchanger. The furnace is factory-shipped for use with natural gas. This furnace is not approved for installation in mobile homes, recreational vehicles, or outdoors.

This furnace is designed for minimum continuous return-air temperature of 60°F (15°C) db or intermittent operation down to 55°F (13°C)db such as when used with a night setback thermostat. Return-air temperature must not exceed 80°F (27°C) db. Failure to follow these return-air temperature limits may affect reliability of heat exchangers, motors, and controls, see Fig. 4.

For accessory installation details, refer to the applicable instruction literature.

NOTE: Remove all shipping brackets and materials before operating the furnace.

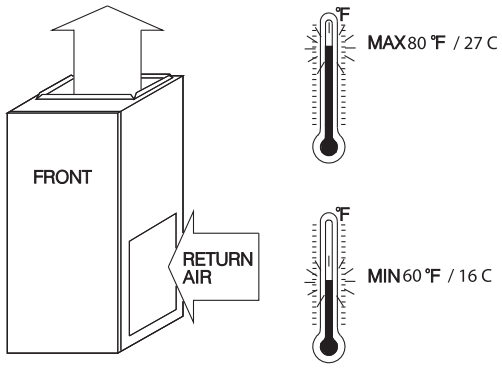

A06745

Fig. 4 – Return Air Temperature

⚠ WARNING

FIRE HAZARD

Failure to follow this warning could result in personal injury, death and/or property damage.

Do not install the furnace on its back or hang furnace with control compartment facing downward. Safety control operation will be adversely affected. Never connect return-air ducts to the back of the furnace, see Fig. 5.

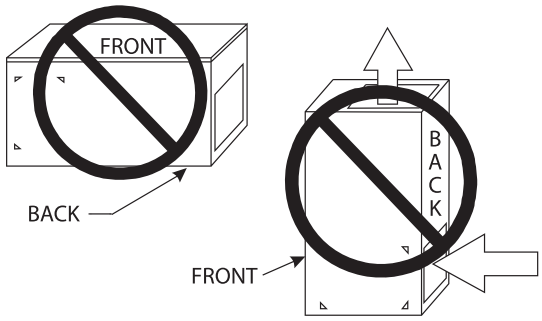

A02054

Fig. 5 – Prohibit Installation on Back

⚠ WARNING

FIRE, INJURY OR DEATH HAZARD

Failure to follow this warning could result in personal injury, death and/or property damage.

When the furnace is installed in a residential garage, the burners and ignition sources must be located at least 18 in. (457 mm) above the floor. The furnace must be located or protected to avoid damage by vehicles. When the furnace is installed in a public garage, airplane hangar, or other building having a hazardous atmosphere, the furnace must be installed in accordance with the NFPA 54/ANSI Z223.1, see Fig. 6.

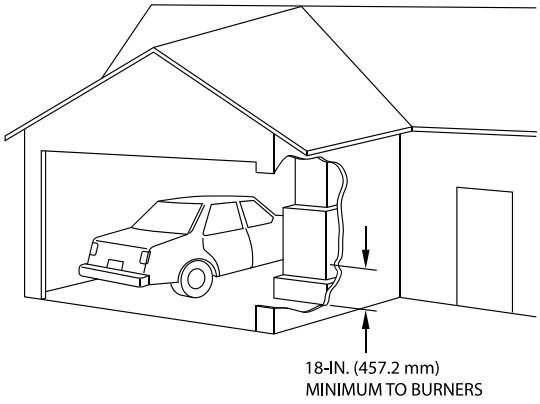

A93044

Fig. 6 – Installation in a Garage

CODES AND STANDARDS

Follow all national and local codes and standards in addition to these instructions. The installation must comply with regulations of the serving gas supplier, local building, heating, plumbing, and other codes. In absence of local codes, the installation must comply with the national codes listed below and all authorities having jurisdiction.

In the United States, follow all codes and standards for the following:

Safety

NFPA 54/ANSI Z223.1 and the Installation Standards, Warm Air Heating and Air Conditioning Systems ANSI/NFPA 90B.

General Installation

Current edition of the NFGC and the NFPA 90B. For copies, contact the National Fire Protection Association Inc., Batterymarch Park, Quincy, MA 02269; (www.NFPA.org) or for only the NFGC, contact the American Gas Association, 400 N. Capitol Street, N.W., Washington, DC 20001 (www.AGA.org.).

Combustion and Ventilation Air

Section 9.3 NFPA 54/ANSI Z223.1, Air for Combustion and Ventilation.

Duct Systems

Air Conditioning Contractors Association (ACCA) Manual D, Sheet Metal and Air Conditioning Contractors National Association (SMACNA), or American Society of Heating, Refrigeration, and Air Conditioning Engineers (ASHRAE) 2001 Fundamentals Handbook Chapter 34 or 2000 HVAC Systems and Equipment Handbook Chapters 9 and 16.

Acoustical Lining and Fibrous Glass Duct

Current edition of SMACNA and NFPA 90B as tested by UL Standard 181 for Class I Rigid Air Ducts.

Gas Piping and Gas Pipe Pressure Testing

NFPA 54/ANSI Z223.1; Chapters 5, 6, and 7 and National Plumbing Codes.

Electrical Connections

National Electrical Code (NEC) ANSI/NFPA70.

Venting

NFPA 54/ANSI Z223.1; Chapters 12 and 13.

ELECTROSTATIC DISCHARGE (ESD) PRECAUTIONS PROCEDURE

1. Disconnect all power to the furnace. Multiple disconnects may be required. DO NOT TOUCH THE CONTROL OR ANY WIRE CONNECTED TO THE CONTROL PRIOR TO DISCHARGING YOUR BODY'S ELECTROSTATIC CHARGE TO GROUND.
2. Firmly touch the clean, unpainted, metal surface of the furnace chassis which is close to the control. Tools held in a person's hand during grounding will be satisfactorily discharged.

⚠ CAUTION

FURNACE RELIABILITY HAZARD

Failure to follow this caution may result in unit component damage.

Electrostatic discharge can affect electronic components. Take precautions during furnace installation and servicing to protect the furnace electronic control. Precautions will prevent electrostatic discharges from personnel and hand tools which are held during the procedure. These precautions will help to avoid exposing the control to electrostatic discharge by putting the furnace, the control, and the person at the same electrostatic potential.

3. After touching the chassis, you may proceed to service the control or connecting wires as long as you do nothing to recharge your body with static electricity (for example; DO NOT move or shuffle your feet, do not touch ungrounded objects, etc.).
4. If you touch ungrounded objects (and recharge your body with static electricity), firmly touch a clean, unpainted metal surface of the furnace again before touching control or wires.
5. Use this procedure for installed and uninstalled (ungrounded) furnaces.
6. Before removing a new control from its container, discharge your body's electrostatic charge to ground to protect the control from damage. If the control is to be installed in a furnace, follow items 1 through 4 before bringing the control or yourself in contact with the furnace. Put all used and new controls into containers before touching ungrounded objects.
7. An ESD service kit (available from commercial sources) may also be used to prevent ESD damage.

⚠ WARNING

CARBON MONOXIDE POISONING / COMPONENT DAMAGE HAZARD

Failure to follow this warning could result in personal injury or death and unit component damage.

Corrosive or contaminated air may cause failure of parts containing flue gas, which could leak into the living space. Air for combustion must not be contaminated by halogen compounds, which include fluoride, chloride, bromide, and iodide. These elements can corrode heat exchangers and shorten furnace life. Air contaminants are found in aerosol sprays, detergents, bleaches, cleaning solvents, salts, air fresheners, and other household products. Do not install furnace in a corrosive or contaminated atmosphere. Make sure all combustion and circulating air requirements are met, in addition to all local codes and ordinances.

⚠ CAUTION

PERSONAL INJURY AND/OR PROPERTY DAMAGE HAZARD

Improper use or installation of this furnace may result in premature furnace component failure. This gas furnace may be used for heating buildings under construction provided that:

- The furnace is permanently installed with all electrical wiring, piping, venting and ducting installed according to these installation instructions. A return air duct is provided, sealed to the furnace casing, and terminated outside the space containing the furnace. This prevents a negative pressure condition as created by the circulating air blower, causing a flame rollout and/or drawing combustion products into the structure.
- The furnace is controlled by a thermostat. It may not be “hot wired” to provide heat continuously to the structure without thermostatic control.
- Clean outside air is provided for combustion. This is to minimize the corrosive effects of adhesives, sealers and other construction materials. It also prevents the entrainment of drywall dust into combustion air, which can cause fouling and plugging of furnace components.
- The temperature of the return air to the furnace is maintained between 55°F (13°C) and 80°F (27°C), with no evening setback or shutdown. The use of the furnace while the structure is under construction is deemed to be intermittent operation per our installation instructions.
- The air temperature rise is within the rated rise range on the furnace rating plate, and the gas input rate has been set to the nameplate value.
- The filters used to clean the circulating air during the construction process must be either changed or thoroughly cleaned prior to occupancy.
- The furnace, ductwork and filters are cleaned as necessary to remove drywall dust and construction debris from all HVAC system components after construction is completed.
- Verify proper furnace operating conditions including ignition, gas input rate, air temperature rise, and venting according to these installation instructions.

LOCATION

GENERAL

This multipoise furnace is shipped in packaged configuration. Some assembly and modifications are required when used in any of four applications, see in Fig. 3.

NOTE: For high-altitude installations, the high-altitude conversion kit MUST be installed at or above 5500 ft. (1676 M) above sea level. Obtain high-altitude conversion kit from your area authorized distributor.

This furnace must:

- be installed so the electrical components are protected from water.
- not be installed directly on any combustible material other than wood flooring (refer to SAFETY CONSIDERATIONS).
- be located close to the chimney or vent and attached to an air distribution system. Refer to Air Ducts section.
- be provided ample space for servicing and cleaning. Always comply with minimum fire protection clearances shown on the furnace clearance to combustible construction label.

The following types of furnace installations may require OUTDOOR AIR for combustion due to chemical exposures:

- Commercial buildings
- Buildings with indoor pools
- Laundry rooms
- Hobby or craft rooms, and
- Chemical storage areas

If air is exposed to the following substances, it should not be used for combustion air, and outdoor air may be required for combustion:

- Permanent wave solutions
- Chlorinated waxes and cleaners
- Chlorine based swimming pool chemicals
- Water softening chemicals
- De-icing salts or chemicals
- Carbon tetrachloride
- Halogen type refrigerants
- Cleaning solvents (such as perchloroethylene)
- Printing inks, paint removers, varnishes, etc.
- Hydrochloric acid
- Cements and glues
- Antistatic fabric softeners for clothes dryers
- Masonry acid washing materials

All fuel-burning equipment must be supplied with air for fuel combustion. Sufficient air must be provided to avoid negative pressure in the equipment room or space. A positive seal must be made between the furnace cabinet and the return-air duct to prevent pulling air from the burner area and from draft safeguard opening.

⚠ CAUTION

FURNACE CORROSION HAZARD

Failure to follow this caution may result in furnace damage.

Air for combustion must not be contaminated by halogen compounds, which include fluoride, chloride, bromide, and iodide. These elements can corrode heat exchangers and shorten furnace life. Air contaminants are found in aerosol sprays, detergents, bleaches, cleaning solvents, salts, air fresheners, and other household products.

LOCATION RELATIVE TO COOLING EQUIPMENT

The cooling coil must be installed parallel with, or on the downstream side of the unit to avoid condensation in the heat exchangers. When installed parallel with the furnace, dampers or other flow control must prevent chilled air from entering the furnace. If the dampers are manually operated, they must be equipped with means to prevent operation of either unit unless the damper is in the full-heat or full-cool position.

AIR FOR COMBUSTION AND VENTILATION

Provisions for adequate combustion, ventilation, and dilution air must be provided in accordance with:

- U.S. Installations: Section 9.3 of the NFPA 54/ANSI Z223.1, Air for Combustion and Ventilation and applicable provisions of the local building codes.

⚠ WARNING

CARBON MONOXIDE POISONING HAZARD

Failure to follow this warning could result in personal injury or death. The operation of exhaust fans, kitchen ventilation fans, clothes dryers, attic exhaust fans or fireplaces could create a NEGATIVE PRESSURE CONDITION at the furnace. Make-up air MUST be provided for the ventilation devices, in addition to that required by the furnace. Refer to the Carbon Monoxide Poisoning Hazard warning in the venting section of these instructions to determine if an adequate amount of make-up air is available.

The requirements for combustion and ventilation air depend upon whether or not the furnace is located in a space having a volume of at least 50 cubic feet per 1,000 BTUh input rating for all gas appliances installed in the space.

- Spaces having less than 50 cubic feet per 1,000 BTUh require the OUTDOOR COMBUSTION AIR METHOD.
- Spaces having at least 50 cubic feet per 1,000 BTUh may use the **INDOOR COMBUSTION AIR, STANDARD or KNOWN AIR INFILTRATION METHOD**.

Outdoor Combustion Air Method

1. Provide the space with sufficient air for proper combustion, ventilation, and dilution of flue gases using permanent horizontal or vertical duct(s) or opening(s) directly communicating with the outdoors or spaces that freely communicate with the outdoors.
2. Fig. 7 illustrates how to provide TWO OUTDOOR OPENINGS, one inlet and one outlet combustion and ventilation air opening, to the outdoors.
   a. One opening MUST commence within 12 in. (300 mm) of the ceiling and the second opening MUST commence within 12 in. (300 mm) of the floor.
   b. Size openings and ducts per Fig. 7 and Table 2.
   c. TWO HORIZONTAL DUCTS require 1 sq. in. (645 sq. mm) of free area per 2,000 BTUh (1,100 mm^2/kW) of combined input for all gas appliances in the space per Fig. 7 and Table 2.
   d. TWO OPENINGS OR VERTICAL DUCTS require 1 sq. in. (645 sq. mm) of free area per 4,000 BTUh (550 mm^2/kW) for combined input of all gas appliances in the space per Fig. 7 and Table 2.
3. ONE OUTDOOR OPENING requires:
   a. 1 sq. in. (645 sq. mm) of free area per 3,000 BTUh (734 mm^2/kW) for combined input of all gas appliances in the space per Table 2 and
   b. Not less than the sum of the areas of all vent connectors in the space.

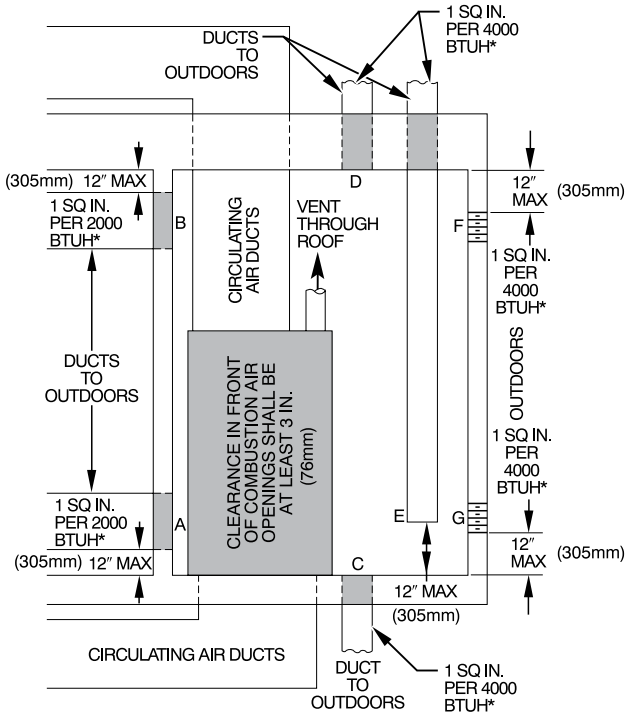

A03174

* Minimum dimensions of 3 in. (76 mm).

NOTE: Use any of the following combinations of openings: A&B, C&D, D&E, F&G

Fig. 7 – Air for Combustion, Ventilation, and Dilution for Outdoors

The opening shall commence within 12 in. (300 mm) of the ceiling. Appliances in the space shall have clearances of at least 1 in. (25 mm) from the sides and back and 6 in. (150 mm) from the front. The opening shall directly communicate with the outdoors or shall communicate through a vertical or horizontal duct to the outdoors or spaces (crawl or attic) that freely communicate with the outdoors.

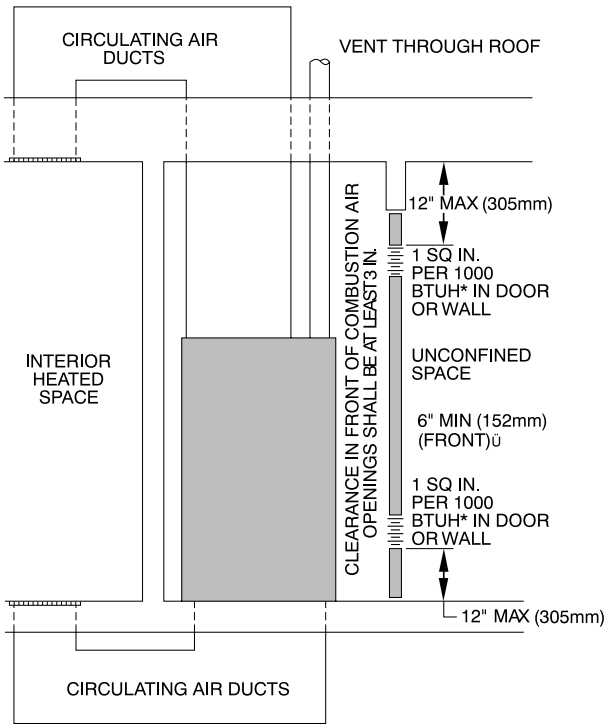

A03175

* Minimum opening size is 100 in.2 with minimum dimensions of 3 in. (76 mm).

* Minimum of 3 in. (76 mm), when type -B1 vent is used.

Fig. 8 – Air for Combustion, Ventilation, and Dilution from Indoors

Indoor Combustion Air© NFPA & AGA Standard and Known-Air-Infiltration Rate Methods

Indoor air is permitted for combustion, ventilation, and dilution, if the **Standard** or **Known-Air-Infiltration** Method is used.

⚠ WARNING

CARBON MONOXIDE POISONING HAZARD

Failure to follow this warning could result in personal injury or death.

Many homes require air to be supplied from outdoors for furnace combustion, ventilation, and dilution of flue gases.

The furnace combustion air supply must be provided in accordance with this instruction manual.

Table 2 – Minimum Free Area Required for Each Combustion Air opening of Duct to Outdoors

FURNACE INPUT (BTUH)	TWO HORIZONTAL DUCTS (1 SQ. IN./2,000 BTUH) (1,100 SQ. MM/KW)		SINGLE DUCT OR OPENING (1 SQ. IN./3,000 BTUH) (734 SQ. MM/KW)		TWO OPENINGS OR VERTICAL DUCTS (1 SQ. IN./4,000 BTUH) (550 SQ. MM/KW)	
	Free Area of Opening and Duct Sq. In. (Sq. mm)	Round Duct Dia. In. (mm)	Free Area of Opening and Duct Sq. In. (Sq. mm)	Round Duct Dia. In. (mm)	Free Area of Opening and Duct Sq. In. (Sq. mm)	Round Duct Dia. In. (mm)
44,000	22 (14194)	6 (152)	14.7 (9484)	5 (127)	11 (7096)	4 (102)
66,000	33 (21290)	7 (178)	22 (14193)	6 (152)	16.5 (10645)	5 (127)
88,000	44 (28387)	8 (203)	29.3 (18903)	7 (178)	22 (14193)	6 (152)
110,000	55 (35484)	9 (229)	36.7 (23677)	7 (178)	27.5 (17742)	6 (152)
132,000	66 (42580)	10 (254)	44 (28387)	8 (203)	33 (21290)	7 (178)

EXAMPLES: DETERMINING FREE AREA

FURNACE		WATER HEATER		TOTAL INPUT		
110,000	+	30,000	=	(140,000 divided by 4,000)	=	35.0 Sq. In. for each two Vertical Ducts or Openings
66,000	+	40,000	=	(106,000 divided by 3,000)	=	35.3 Sq. In. for a Single Duct or Opening
88,000	+	30,000	=	(118,000 divided by 2,000)	=	59.0 Sq. In. for each of two Horizontal Ducts

Table 3 – Minimum Space Volumes for 100% Combustion, Ventilation, and Dilution from Indoors

ACH	OTHER THAN FAN-ASSISTED TOTAL (1,000'S BTUH GAS INPUT RATE)			FAN-ASSISTED TOTAL (1,000'S BTUH GAS INPUT RATE)					
	30	40	50	44	66	88	110	132	154
	Space Volume Ft^3 (M^3)								
0.60	1,050 (29.7)	1,400 (39.6)	1,750 (49.5)	1,100 (31.1)	1,650 (46.7)	2,200 (62.2)	2,750 (77.8)	3,300 (93.4)	3,850 (109.0)
0.50	1,260 (35.6)	1,680 (47.5)	2,100(59.4)	1,320 (37.3)	1,980 (56.0)	2,640 (74.7)	3,300 (93.4)	3,960 (112.1)	4,620 (130.8)
0.40	1,575 (44.5)	2,100 (59.4)	2,625(74.3)	1,650 (46.7)	2,475 (70.0)	3,300 (93.4)	4,125 (116.8)	4,950 (140.1)	5,775 (163.5)
0.30	2,100 (59.4)	2,800 (79.2)	3,500(99.1)	2,200 (62.2)	3,300 (93.4)	4,400 (124.5)	5,500 (155.7)	6,600 (186.8)	7,700 (218.0)
0.20	3,150 (89.1)	4,200 (118.9)	5,250 (148.6)	3,300 (93.4)	4,950 (140.1)	6,600 (186.8)	8,250 (233.6)	9,900 (280.3)	11,550 (327.0)
0.10	6,300 (178.3)	8,400 (237.8)	10,500 (297.3)	6,600 (186.8)	9,900 (280.3)	13,200 (373.7)	16,500 (467.2)	19,800 (560.6)	23,100 (654.1)
0.00	NP	NP	NP	NP	NP	NP	NP	NP	NP

NP = Not Permitted

The Standard Method:

Use the **Standard Method** if:

1. The space has no less volume than 50 cubic feet per 1,000 BTUh of the maximum input ratings for all gas appliances installed in the space and
2. The air infiltration rate is not known to be less than 0.40 air changes per hour (ACH).

Use the **Known Air Infiltration Rate Method** if the infiltration rate is known to be:

1. Less than 0.40 ACH and
2. Equal to or greater than 0.10 ACH

Infiltration rates greater than 0.60 ACH shall not be used. The minimum required volume of the space varies with the number of ACH and shall be determined per Table 3 or Equations 1 and 2. Determine the minimum required volume for each appliance in the space and add the volumes together to get the total minimum required volume for the space.

Table 3 - Minimum Space Volumes were determined by using the following equations from the *National Fuel Gas Code ANSI Z223.1/NFPA 54, 9.3.2.2:*

1. For other than fan-assisted appliances, such as a draft hood-equipped water heater, use the following equation:

$$\text{Volume}_{\text{Other}} = \frac{21\,\text{ft}^3}{\text{AC H}}\left(\frac{\text{I}_{\text{other}}}{1000\ \text{Btu/hr}}\right)$$

A04002

2. For fan-assisted appliances such as this furnace, use the following equation:

$$\text{Volume}_{\text{Fan}} = \frac{15\text{ft}^3}{\text{AC H}}\left(\frac{\text{I}_{\text{fan}}}{1000\ \text{Btu/hr}}\right)$$

A04003

If the following is applied to either equation:

I_{other} = combined input of all other than fan-assisted appliances in BTUh/hr

I_{fan} = combined input of all fan-assisted appliances in BTUh/hr

ACH = air changes per hour (ACH shall not exceed 0.60.)

Then the following requirements apply to both the **Standard Method** and to the **Known Air Infiltration Rate Method:**

1. Adjoining rooms can be considered part of a space if:
   a. There are no closeable doors between rooms.
   b. Combining spaces on same floor level. Each opening shall have free area of at least 1 $in.^2$/1,000 BTUh (2,000 mm^2/kW) of the total input rating of all gas appliances in the space, but not less than 100 $in.^2$ (0.06 m2). One opening shall commence within 12 in. (300 mm) of the ceiling and the second opening shall commence within 12 in. (300 mm) of the floor. The minimum dimension of air openings shall be at least 3 in. (80 mm), see Fig. 8.
   c. Combining space on different floor levels. The volumes of spaces on different floor levels shall be considered as communicating spaces if connected by one or more permanent openings in doors or floors having free area of at least 2 $in.^2$/1,000 BTUh (4,400 mm^2/kW) of total input rating of all gas appliances
2. An attic or crawlspace may be considered a space that freely communicates with the outdoors provided there are adequate permanent ventilation openings directly to outdoors having free area of at least 1-$in.^2$/4,000 BTUh of total input rating for all gas appliances in the space.
3. In spaces that use the Indoor Combustion Air Method, infiltration should be adequate to provide air for combustion, permanent ventilation and dilution of flue gases. However, in buildings with unusually tight construction, additional air MUST be provided using the methods described in the Outdoor Combustion Air Method section.
4. Unusually tight construction is defined as Construction with:
   a. Walls and ceilings exposed to the outdoors have a continuous, sealed vapor barrier. Openings are gasketed or sealed and
   b. Doors and openable windows are weatherstripped and
   c. Other openings are caulked or sealed. These include joints around window and door frames, between sole plates and floors, between wall-ceiling joints, between wall panels, at penetrations for plumbing, electrical and gas lines, etc.

Combination of Indoor and Outdoor Air

1. Indoor openings shall comply with the Indoor Combustion Air Method below and,
2. Outdoor openings shall be located as required in the Outdoor Combustion Air Method mentioned previously and,
3. Outdoor openings shall be sized as follows:
   a. Calculate the Ratio of all Indoor Space volume divided by required volume for Indoor Combustion Air Method below.
   b. Outdoor opening size reduction Factor is 1 minus the Ratio in step a. above.
   c. Minimum size of Outdoor openings shall be the size required in Outdoor Combustion Air Method above multiplied by reduction Factor in b. above. The minimum dimension of air openings shall be not less than 3 in. (80 mm).

INSTALLATION

Upflow Installation

Bottom Return Air Inlet

These furnaces are shipped with bottom closure panel installed in bottom return-air opening. Remove and discard this panel when bottom return air is used. To remove bottom closure panel, perform the following:

1. Tilt or raise furnace and remove 2 screws holding bottom filler panel, see Fig. 9.
2. Rotate bottom filler panel downward to release holding tabs.
3. Remove bottom closure panel.
4. Reinstall bottom filler panel and screws.

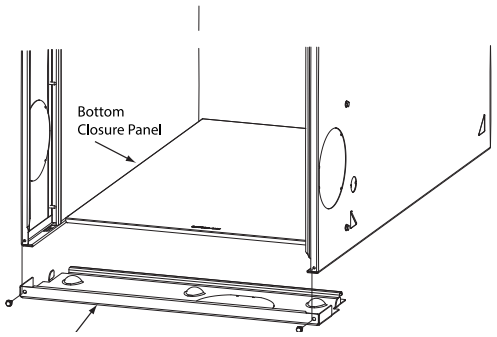

A10273

Fig. 9 – Removing Bottom Closure Panel

Side Return Air Inlet

These furnaces are shipped with bottom closure panel installed in bottom return-air opening. This panel MUST be in place when only side return air is used.

NOTE: Side return-air openings can be used in UPFLOW and most HORIZONTAL configurations. Do not use side return-air openings in DOWNFLOW configuration.

Leveling Legs (If Desired)

In upflow position with side return inlet(s), leveling legs may be used, see Fig. 10. Install field-supplied, 5/16 X 1-1/2 in. (8 X 38 mm) (max) corrosion-resistant machine bolts, washers and nuts.

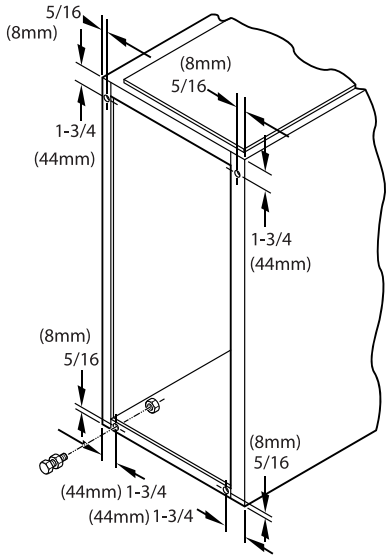

A89014

Fig. 10 – Leveling Legs

NOTE: Bottom closure must be used when leveling legs are used. It may be necessary to remove and reinstall bottom closure panel to install leveling legs. To remove bottom closure panel, see Item 1 in "Bottom Return Air Inlet" section in Step 1 above.

To install leveling legs:

1. Position furnace on its back. Locate and drill a hole in each bottom corner of furnace, see Fig. 10.
2. For each leg, install nut on bolt and then install bolt with nut in hole. (Install flat washer if desired.)
3. Install another nut on other side of furnace base. (Install flat washer if desired.)
4. Adjust outside nut to provide desired height, and tighten inside nut to secure arrangement.
5. Reinstall bottom closure panel if removed.

Downflow Installation

⚠ CAUTION

EQUIPMENT OR PROPERTY DAMAGE

Failure to follow this caution could result in equipment or property damage

When furnace is installed in a downflow application, make sure water lines and other sources of water cannot drip or fail in such a way that water can collect on the blower motor, wiring, and furnace control board.

NOTE: For downflow applications, this furnace is approved for use on combustible flooring when any one of the following accessories are used:

- Manufacturer's approved downflow combustible floor subbase
- Manufacturer's approved cased evaporator coil
- Manufacturer's approved evaporator coil casing

1. Determine application being installed from Table 4
2. Construct hole in floor, see Table 4 and Fig. 11.
3. Construct plenum to dimensions specified, see Table 4 and Fig. 11.
4. If downflow subbase is used, install as show in Fig. 12. If manufacturer's cased evaporator coil or coil casing is used, install as shown in Fig. 13.

NOTE: It is recommended that the perforated supply-air duct flanges be completely folded over or removed from furnace when installing the furnace on a factory-supplied cased coil or coil box. To remove the supply-air duct flange, use wide duct pliers or hand seamers to bend flange back and forth until it breaks off. Be careful of sharp edges. Refer to Duct Flanges (Fig. 18) in the "Air Ducts" section.

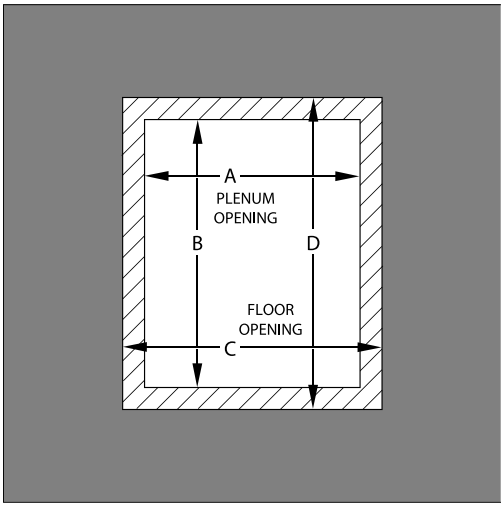

A96283

Fig. 11 – Floor and Plenum Opening Dimensions

Bottom Return Air Inlet

These furnaces are shipped with bottom closure panel installed in bottom return-air opening. Remove and discard this panel when bottom return air is used. To remove bottom closure panel, perform the following:

1. Tilt or raise furnace and remove 2 screws holding bottom filler panel, Fig. 9.
2. Rotate bottom filler panel downward to release holding tabs.
3. Remove bottom closure panel.
4. Reinstall bottom filler panel and screws.

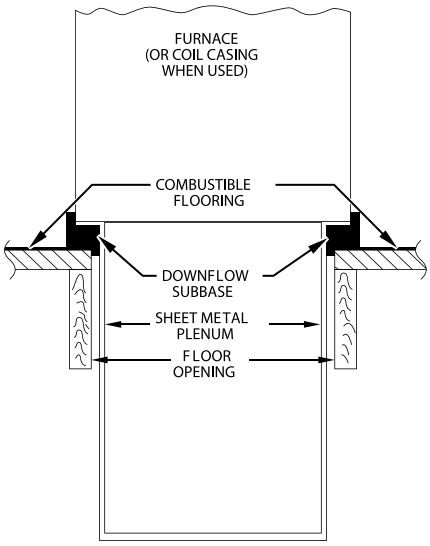

A96285

Fig. 12 – Furnace, Plenum, and Subbase Installed on a Combustible Floor

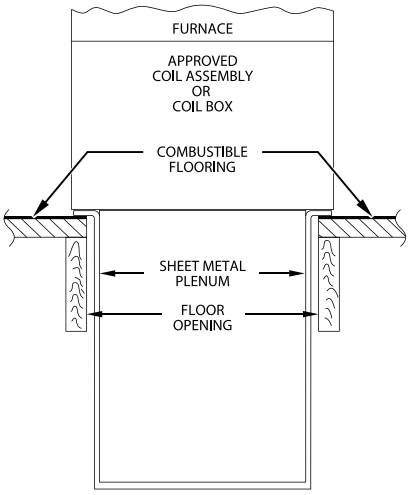

A08556

Fig. 13 – Furnace, Plenum, and Coil Assembly or Coil Box Installed on a Combustible Floor

Table 4 – Opening Dimensions - In. (mm)

FURNACE CASING WIDTH IN. (mm)	APPLICATION	PLENUM OPENING		FLOOR OPENING	
		A	B	C	D
14–3/16 (360)	Upflow Applications on Combustible or Noncombustible Flooring (subbase not required)	12-11/16 (322)	21-5/8 (549)	13-5/16 (338)	22-1/4 (565)
	Downflow Applications on Noncombustible Flooring (subbase not required)	12-9/16 (319)	19 (483)	13-3/16 (335)	19-5/8 (498)
	Downflow applications on Combustible Flooring (subbase required)	11-13/16 (300)	19 (483)	13-7/16 (341)	20-5/8 (524)
	Downflow Applications on Combustible Flooring with coil assembly or coil box (subbase not required)	12-5/16 (313)	19 (483)	13-5/16 (338)	20 (508)
17–1/2 (445)	Upflow Applications on Combustible or Noncombustible Flooring (subbase not required)	16 (406)	21-5/8 (549)	16-5/8 (422)	22-1/4 (565)
	Downflow Applications on Noncombustible Flooring (subbase not required)	15-7/8 (403)	19 (483)	16-1/2 (419)	19-5/8 (498)
	Downflow Applications on Combustible Flooring (subbase required)	15-1/8 (384)	19 (483)	16-3/4 (425)	20-5/8 (524)
	Downflow Applications on Combustible Flooring with coil assembly or coil box (subbase not required)	15-1/2 (394)	19 (483)	16-1/2 (419)	20 (508)
21 (533)	Upflow Applications on Combustible or Noncombustible Flooring (subbase not required)	19-1/2 (495)	21-5/8 (549)	20-1/8 (511)	22-1/4 (565)
	Downflow Applications on Noncombustible Flooring (subbase not required)	19-3/8 (492)	19 (483)	20 (508)	19-5/8 (498)
	Downflow Applications on Combustible Flooring (subbase required)	18-5/8 (473)	19 (483)	20-1/4 (514)	20-5/8 (524)
	Downflow Applications on Combustible Flooring with coil assembly or coil box (subbase not required)	19 (483)	19 (483)	20 (508)	20 (508)
24-1/2 (622)	Upflow Applications on Combustible or Noncombustible Flooring (subbase not required)	23 (584)	21-5/8 (549)	23-5/8 (600)	22-1/4 (565)
	Downflow Applications on Noncombustible Flooring (subbase not required)	22-7/8 (581)	19 (483)	23-1/2 (597)	19-5/8 (498)
	Downflow Applications on Combustible Flooring (subbase required)	22-1/8 (562)	19 (483)	23-3/4 (603)	20-5/8 (524)
	Downflow Applications on Combustible Flooring with coil assembly or coil box (subbase not required)	22-1/2 (572)	19 (483)	23-1/2 (597)	20 (508)

⚠ WARNING

FIRE, EXPLOSION, AND CARBON MONOXIDE POISONING HAZARD

Failure to follow this warning could result in personal injury, death, or property damage.

Do not install the furnace on its back or hang furnace with control compartment facing downward. Safety control operation will be adversely affected. Never connect return-air ducts to the back of the furnace.

Horizontal Installation

The furnace can be installed horizontally in an attic or crawlspace on either the left-hand (LH) or right-hand (RH) side. The furnace can be hung from floor joists, rafters or trusses or installed on a non-combustible platform, blocks, bricks or pad.

Suspended Furnace Support

The furnace may be supported under each end with threaded rod, angle iron or metal plumber's strap as shown, see Fig. 15 and Fig. 16. Secure angle iron to bottom of furnace as shown. Heavy-gauge sheet metal straps (plumber's straps) may be used to suspend the furnace from each bottom corner. To prevent screws from pulling out, use 2 #8 x 3/4-in. screws into the side and 2 #8 x 3/4-in. screws in the bottom of the furnace casing for each strap, see Fig. 15 and Fig. 16.

If the screws are attached to ONLY the furnace sides and not the bottom, the straps must be vertical against the furnace sides and not pull away from the furnace sides, so that the strap attachment screws are not in tension (are loaded in shear) for reliable support.

Platform Furnace Support

Construct working platform at location where all required furnace clearances are met, see Fig. 2 and Fig. 14. For furnaces with 1-in. (25 mm) clearance requirement on side, set furnace on non-combustible blocks, bricks or angle iron. For crawlspace installations, if the furnace is not suspended from the floor joists, the ground underneath furnace must be level and the furnace set in blocks or bricks.

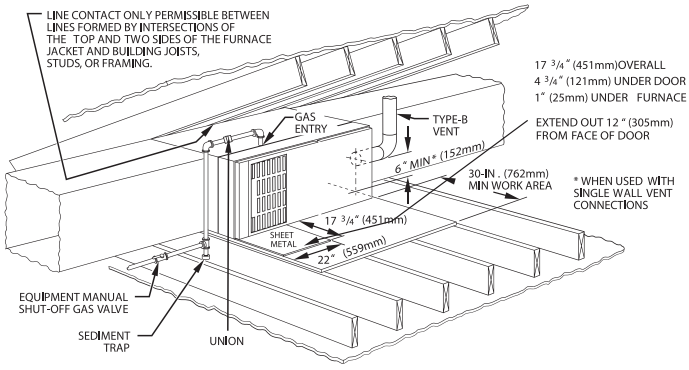

A10164

Fig. 14 – Typical Attic Installation

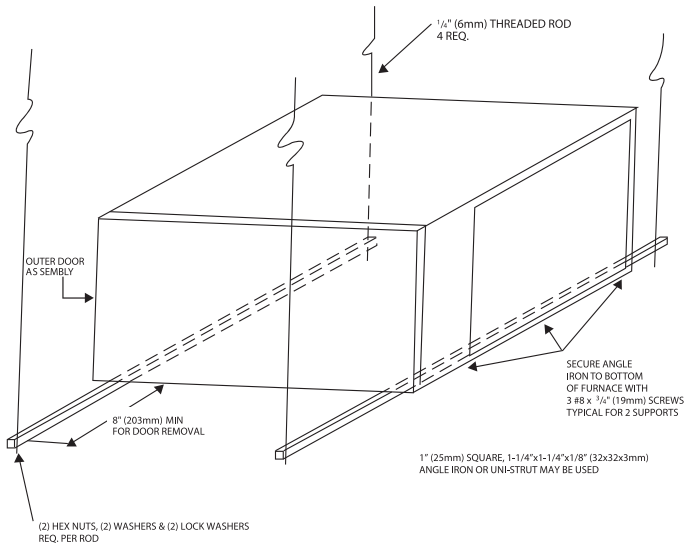

Fig. 15 – Horizontal Unit Suspension

Roll-Out Protection

Provide a minimum 17-3/4-in. X 22-in. (451 X 559 mm) piece of sheet metal for flame roll-out protection in front of burner area for furnaces closer than 12-in. (305 mm) above the combustible deck or suspended furnaces closer than 12-in. (305 mm) to joists. The sheet metal MUST extend underneath the furnace casing by 1-in. (25 mm) with the door removed.

The bottom closure panel on furnaces of widths 17-1/2-in. (445 mm) and larger may be used for flame roll-out protection when bottom of furnace is used for return air connection. See Fig. 14 for proper orientation of roll-out shield.

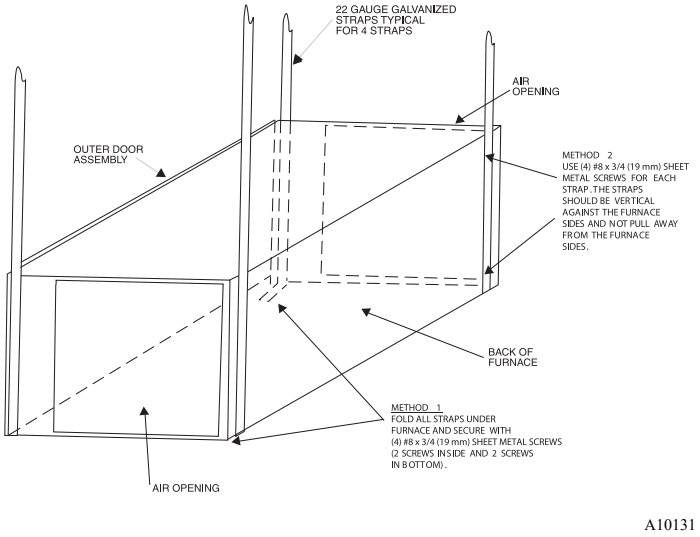

Fig. 16 – Horizontal Suspension with Straps

Bottom Return Air Inlet

These furnaces are shipped with bottom closure panel installed in bottom return-air opening. Remove and discard this panel when bottom return air is used. To remove bottom closure panel, perform the following:

1. Tilt or raise furnace and remove two screws holding bottom filler panel, see Fig. 9.
2. Rotate bottom filler panel downward to release holding tabs.
3. Remove bottom closure panel.
4. Reinstall bottom filler panel and screws.

Side Return Air Inlet

These furnaces are shipped with bottom closure panel installed in bottom return-air opening. This panel MUST be in place when side return air inlet(s) are used without a bottom return air inlet.

Not all horizontal furnaces are approved for side return air (Fig. 21).

⚠ WARNING

FIRE, EXPLOSION, AND CARBON MONOXIDE POISONING HAZARD

Failure to follow this warning could result in personal injury, death, or property damage.

Do not install the furnace on its back or hang with control compartment facing downward. Safety control operation will be adversely affected. Never connect return-air ducts to the back of the furnace.

FILTER ARRANGEMENT

⚠ WARNING

CARBON MONOXIDE POISONING HAZARD

Failure to follow this warning could result in personal injury, or death.

Never operate a furnace without a filter or with filter access door removed.

There are no provisions for an internal filter rack in these furnaces. A field-supplied accessory external filter rack is required.

The furnace may use an optional media filter cabinet. The optional media filter cabinet uses either a standard 1-inch (25 mm) filter or 4-inch (102 mm) wide media filter which can be purchased separately.

The optional media cabinet is sized for bottom return applications for use in upflow, downflow and horizontal applications.

For upflow side return applications, the optional media cabinet (or field supplied accessory air cleaner) can be installed on the side of the furnace or side and bottom when a bottom plenum is used (Fig. 17 and Fig. 20).

For downflow applications, the optional media cabinet (or field supplied accessory air cleaner) must only be connected to the bottom opening on the furnace. See Fig. 17 and Fig. 19.

For horizontal applications, the optional media cabinet (or field supplied accessory air cleaner) for all models can be connected to the bottom opening on the furnace. For side return use in the horizontal position, refer to Fig. 21. If both side and bottom openings are used in Fig. 21, each opening used will require a filter.

A filter rack or any field supplied accessory air cleaner can also be installed in the common return duct prior to entering the return air opening in any orientation.

Refer to the instructions supplied with the external filter rack for assembly and installation options.

Due to the relatively high pressure drops of 1-in (25 mm) thick after-market filter media, it is recommended that the filtration system be designed for at least 2-in (51 mm) thick media.

TIP FROM CONTRACTORS: Install a media cabinet capable of incorporating a 4-in (102 mm) thick media filter. This allows room for future upgrades to other IAQ devices.

See Table 7 for filter size details.

Filter and Return Duct Sizing

Pressure drop must be taken into account when sizing filters, filter racks, IAQ devices, and associated system ductwork. See Table 6 for a comparison of Pressure Drop (initial/clean resistance to airflow) versus Airflow for a variety of filter media types and sizes. These are representative numbers. Consult manufacturers' specification sheet for performance data for a particular filter media or IAQ device.

Design the filter and ductwork for the best match of pressure drop versus filter size. Best practice usually chooses filter systems with pressure drops under 0.2 in. w.c. (50 Pa), with the best blower electrical efficiency and system airflow performance occurring with filter pressure drops under 0.1 in. w.c. (25 Pa).

Provide duct transitions, as required, to smoothly transition airflow from the return duct system to the filter (or IAQ device) to the furnace when the dimensions of the ductwork or furnace return air opening do not match the required filter or IAQ device dimensions. See the instructions supplied with factory-accessory duct adapters.

NOTICE

Design the duct system FIRST to determine how much pressure drop may be allowed in the filter system. See the Air Ducts section. Excessive filter pressure drop often compromises system airflow and duct performance, causes inadequate airflow to the furthest ends of the duct system, as well as causes excess noise and higher than anticipated electrical consumption.

14 x 25 Filter (356 x 635 mm)		Factory-Accessory Washable		Factory-Accessory Media*		Representative After-Market Filter Media*							
						Fiberglass*				Pleated*			
CFM	L/s	(1-in. / 2.5 cm)		(4-in. / 10 cm)		(1-in. / 2.5 cm)		(2-in. / 5 cm)		(1-in. / 2.5 cm)		(2-in. / 5 cm)	
600	(283)	0.04	(12)	0.05	(12)	0.07	(17)	0.10	(26)	0.24	(60)	0.16	(40)
800	(378)	0.06	(15)	0.07	(19)	0.10	(25)	0.15	(39)	0.34	(85)	0.23	(59)
1000	(472)	0.07	(18)	0.10	(27)	0.13	(34)	0.21	(52)	-	-	0.32	(81)
1200	(566)	0.08	(20)	0.14	(36)	0.17	(43)	0.27	(68)	-	-	-	-

16 x 25 Filter (406 x 635 mm)		Factory-Accessory Washable		Factory-Accessory Media*		Representative After-Market Filter Media*							
						Fiberglass*				Pleated*			
CFM	L/s	(1-in. / 2.5 cm)		(4-in. / 10 cm)		(1-in. / 2.5 cm)		(2-in. / 5 cm)		(1-in. / 2.5 cm)		(2-in. / 5 cm)	
600	(283)	0.04	(10)	0.05	(13)	0.06	(15)	0.09	(22)	0.20	(51)	0.13	(34)
800	(378)	0.05	(13)	0.07	(18)	0.08	(21)	0.13	(32)	0.29	(72)	0.20	(49)
1000	(472)	0.06	(16)	0.11	(28)	0.11	(28)	0.17	(43)	-	-	0.27	(67)
1200	(566)	0.07	(18)	0.15	(37)	0.14	(36)	0.22	(56)	-	-	-	-
1400	(661)	0.08	(21)	0.19	(48)	0.18	(45)	0.28	(70)	-	-	-	-
1600	(755)	0.09	(23)	0.24	(60)	0.21	(54)	-	-	-	-	-	-
1800	(850)	0.10	(25)	-	-	0.26	(64)	-	-	-	-	-	-

20 x 25 Filter (508 x 635 mm)		Factory-Accessory Washable		Factory-Accessory Media*		Representative After-Market Filter Media*							
						Fiberglass*				Pleated*			
CFM	(L/s)	(1-in. / 2.5 cm)		(4-in. / 10 cm)		(1-in. / 2.5 cm)		(2-in. / 5 cm)		(1-in. / 2.5 cm)		(2-in. / 5 cm)	
800	(378)	0.04	(11)	0.05	(12)	0.06	(16)	0.09	(24)	0.22	(55)	0.15	(37)
1000	(472)	0.05	(13)	0.07	(18)	0.08	(21)	0.13	(32)	0.29	(72)	0.20	(49)
1200	(566)	0.06	(15)	0.09	(22)	0.11	(27)	0.16	(41)	-	-	0.25	(63)
1400	(661)	0.07	(17)	0.12	(31)	0.13	(33)	0.20	(51)	-	-	0.31	(79)
1600	(755)	0.08	(19)	0.15	(38)	0.16	(40)	0.24	(61)	-	-	-	-
1800	(850)	0.08	(21)	0.18	(47)	0.18	(47)	0.29	(73)	-	-	-	-
2000	(944)	0.09	(23)	0.22	(56)	0.21	(54)	-	-	-	-	-	-
2200	(1038)	0.09	(24)	0.26	(66)	0.25	(62)	-	-	-	-	-	-

25 x 25 Filter (635 x 635 mm)		Factory-Accessory Washable		Factory-Accessory Media*		Representative After-Market Filter Media*							
						Fiberglass*				Pleated*			
CFM	L/s	(1-in. / 2.5 cm)		(4-in. / 10 cm)		(1-in. / 2.5 cm)		(2-in. / 5 cm)		(1-in. / 2.5 cm)		(2-in. / 5 cm)	
800	(378)	0.03	(9)	0.03	(8)	0.05	(12)	0.07	(18)	0.17	(43)	0.11	(28)
1000	(472)	0.04	(11)	0.05	(12)	0.06	(16)	0.09	(24)	0.22	(55)	0.15	(37)
1200	(566)	0.05	(13)	0.07	(17)	0.08	(20)	0.12	(31)	0.27	(68)	0.18	(47)
1400	(661)	0.06	(15)	0.09	(23)	0.10	(24)	0.15	(38)	-	-	0.23	(58)
1600	(755)	0.06	(16)	0.12	(31)	0.11	(29)	0.18	(45)	-	-	0.28	(69)
1800	(850)	0.07	(18)	0.14	(35)	0.13	(34)	0.21	(53)	-	-	-	-
2000	(944)	0.08	(19)	0.16	(41)	0.16	(39)	0.24	(61)	-	-	-	-
2200	(1038)	0.08	(21)	0.19	(49)	0.18	(45)	0.28	(70)	-	-	-	-

*. If the filter size that you are looking for is not contained in Table 6, refer to Table 5 for a comparison of Pressure Drop (initial/clean resistance to airflow) versus Face Velocity for a variety of filter media types.
The following equations relate Face Velocity (FPM), Filter Area and Airflow (CFM):
Filter Face Velocity = Airflow / Filter Area
Minimum Filter Area = Rated System Airflow / Maximum Filter Face Velocity

Table 5 – Optional Filter Media Pressure Drop (Clean) Versus Face Velocity- in. w.c. (Pa)

Face Velocity		Factory-Accy Washable		Representative After-Market Filter Media*							
				Fiberglass*				Pleated*			
FPM	(m/s)	(1-in. / 2.5 cm)		(1-in. / 2.5 cm)		(2-in. / 5 cm)		(1-in. / 2.5 cm)		(2-in. / 5 cm)	
200	(1)	0.04	(10)	0.05	(13)	0.08	(20)	0.18	(47)	0.12	(31)
300	(1.5)	0.05	(14)	0.09	(22)	0.13	(34)	0.30	(75)	0.21	(52)
400	(2)	0.07	(17)	0.13	(32)	0.20	(50)	-	-	0.31	(78)
500	(2.5)	0.08	(21)	0.18	(44)	0.27	(69)	-	-	-	-
600	(3)	0.09	(23)	0.23	-	-	-	-	-	-	-
700	(3.6)	0.10	(26)	0.29	-	-	-	-	-	-	-

*. Recommended to maintain air filter face velocity. See Product Data for part number.

Table 7 – Air Filter Selection and Duct Sizing - In. (mm)

FURNACE CASING WIDTH	FILTER SIZE		FILTER TYPE*
	SIDE RETURN	BOTTOM RETURN	
14-3/16 (360)	16 x 25 x 3/4 (406 x 635 x 19)	14 x 25 x 3/4 (356 x 635 x 19)	Washable
17-1/2 (445)	16 x 25 x 3/4 (406 x 635 x 19)	16 x 25 x 3/4 (406 x 635 x 19)	Washable
21 (533)	16 x 25 x 3/4 (406 x 635 x 19)	20 x 25 x 3/4 (508 x 635 x 19)	Washable
24-1/2 (622)	16 x 25 x 3/4 (406 x 635 x 19)	24 x 25 x 3/4 (610 x 635 x 19)	Washable

*. Recommended to maintain air filter face velocity. See Product Data Sheet for part number.

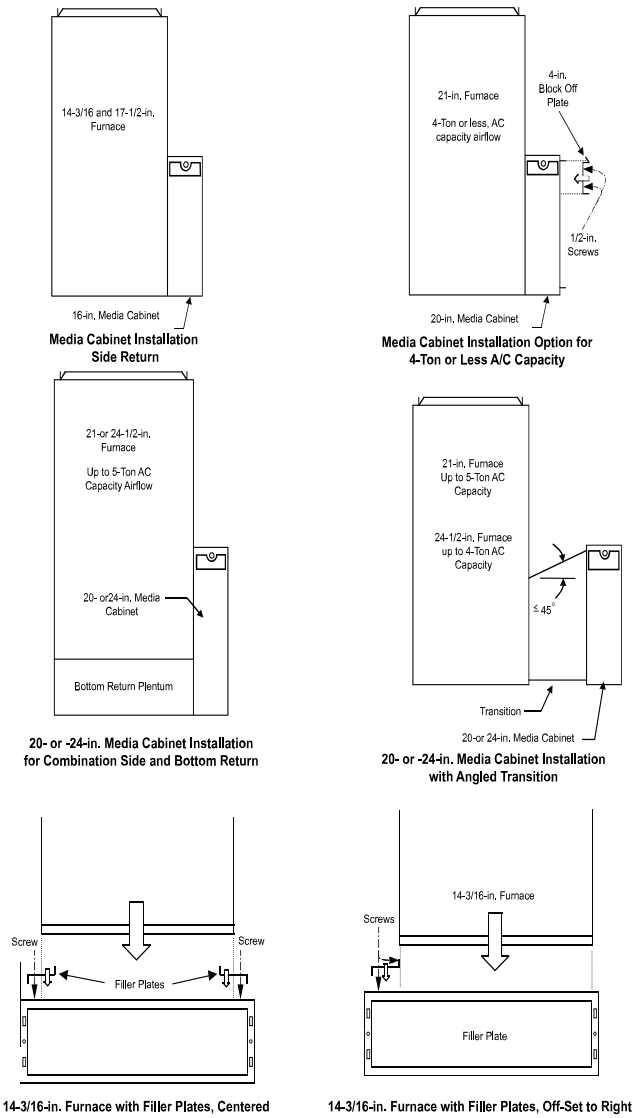

Fig. 17 – Optional Media Filter

AIR DUCTS

General Requirements

The duct system should be designed and sized according to accepted national standards such as those published by: Air Conditioning Contractors Association (ACCA), Sheet Metal and Air Conditioning Contractors National Association (SMACNA) or American Society of Heating, Refrigerating and Air Conditioning Engineers (ASHRAE) or consult *The Air Systems Design Guidelines* reference tables available from your local distributor. The duct system should be sized to handle the required system design CFM at the design external static pressure. The furnace airflow rates are provided in Table 13 thru Table 20 – Air Delivery-CFM. When a furnace is installed so that the supply ducts carry air circulated by the furnace to areas outside the space containing the furnace, the return air shall also be handled by duct(s) sealed to the furnace casing and terminating outside the space containing the furnace.

Secure ductwork with proper fasteners for type of ductwork used. Seal supply- and return-duct connections to furnace with code approved tape or duct sealer.

NOTE: Flexible connections should be used between ductwork and furnace to prevent transmission of vibration.

Ductwork passing through unconditioned space should be insulated to enhance system performance. When air conditioning is used, a vapor barrier is recommended.

Maintain a 1-in. (25 mm) clearance from combustible materials to supply air ductwork for a distance of 36-in. (914 mm) horizontally from the furnace. See NFPA 90B or local code for further requirements

Ductwork Acoustical Treatment

NOTE: Metal duct systems that do not have a 90 degree elbow and 10 ft. (3 M) of main duct to the first branch take-off may require internal acoustical lining. As an alternative, fibrous ductwork may be used if constructed and installed in accordance with the latest edition of SMACNA construction standard on fibrous glass ducts. Both acoustical lining and fibrous ductwork shall comply with NFPA 90B as tested by UL Standard 181 for Class 1 Rigid air ducts.

Supply Air Connections

For a furnace not equipped with a cooling coil, the outlet duct shall be provided with a removable access panel. This opening shall be accessible when the furnace is installed and shall be of such a size that the heat exchanger can be viewed for possible openings using light assistance or a probe can be inserted for sampling the air stream. The cover attachment shall prevent leaks.

Upflow and Horizontal Furnaces

Connect supply-air duct to flanges on furnace supply-air outlet. Bend flange upward to 90° with wide duct pliers, see Fig. 18. The supply-air duct must be connected to ONLY the furnace supply-outlet-air duct flanges or air conditioning coil casing (when used). DO NOT cut main furnace casing side to attach supply air duct, humidifier, or other

accessories. All accessories MUST be connected to duct external to furnace main casing.

NOTE: For horizontal applications, the top most flange may be bent past 90° to allow the evaporator coil to hang on the flange temporarily while the remaining attachment and sealing of the coil are performed.

Downflow Furnaces

Connect supply-air duct to supply-air outlet on furnace. Bend flange inward past 90° with wide duct pliers, see Fig. 18. The supply-air duct must be connected to ONLY the furnace supply outlet or air conditioning coil casing (when used). When installed on combustible material, supply-air duct must be connected to ONLY the factory-approved accessory subbase, or a factory-approved air conditioning coil casing. DO NOT cut main furnace casing to attach supply side air duct, humidifier, or other accessories. All accessories **MUST** be connected to duct external to furnace casing.

Return Air Connections

⚠ WARNING

FIRE HAZARD

A failure to follow this warning could cause personal injury, death and/or property damage.

Never connect return-air ducts to the back of the furnace. Follow instructions below.

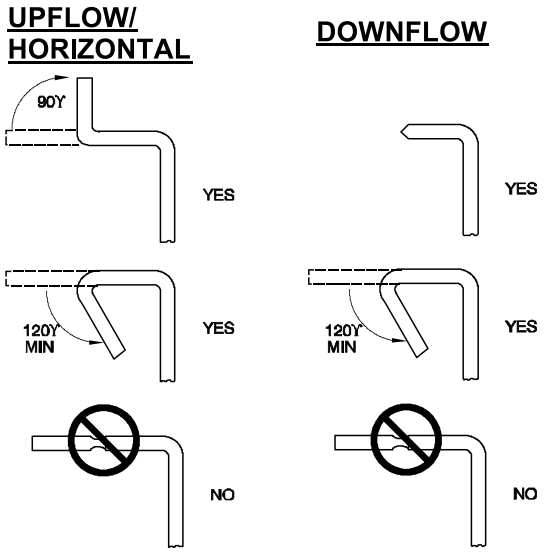

A190346

Fig. 18 – Duct Flanges

Downflow Furnaces

The return-air duct must be connected to return-air opening bottom inlet, see Fig. 19. DO NOT cut into casing sides (left or right). Side opening is permitted for only upflow and certain horizontal furnaces. Bypass humidifier connections should be made at ductwork or coil casing sides exterior to furnace, see Fig. 19.

Upflow and Horizontal Furnaces

The return-air duct must be connected to bottom, sides (left or right), or a combination of bottom and side(s) of main furnace casing, see Fig. 20. Bypass humidifier may be attached into unused return air side of the furnace casing, see Fig. 20 and Fig. 21. Not all horizontal furnace models are approved for side return air connections, see Fig. 21.

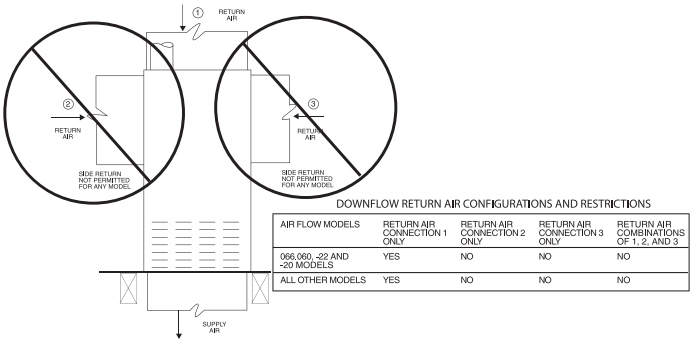

AIR FLOW MODELS	RETURN AIR CONNECTION 1 ONLY	RETURN AIR CONNECTION 2 ONLY	RETURN AIR CONNECTION 3 ONLY	RETURN AIR COMBINATIONS OF 1, 2, AND 3
066,060, -22 AND -20 MODELS	YES	NO	NO	NO
ALL OTHER MODELS	YES	NO	NO	NO

A02163

Fig. 19 – Downflow Return Air Configurations and Restrictions

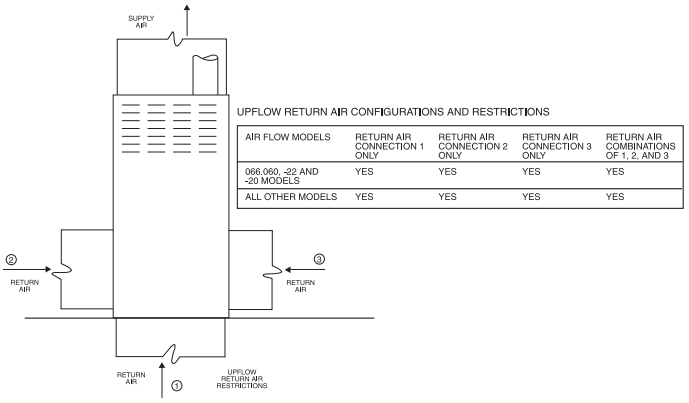

AIR FLOW MODELS	RETURN AIR CONNECTION 1 ONLY	RETURN AIR CONNECTION 2 ONLY	RETURN AIR CONNECTION 3 ONLY	RETURN AIR COMBINATIONS OF 1, 2, AND 3
066,060, -22 AND -20 MODELS	YES	YES	YES	YES
ALL OTHER MODELS	YES	YES	YES	YES

A02075

Fig. 20 – Upflow Return Air Configurations and Restrictions

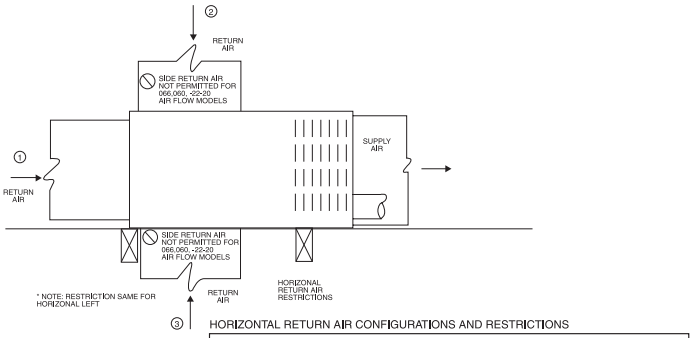

AIR FLOW MODELS	RETURN AIR CONNECTION 1 ONLY	RETURN AIR CONNECTION 2 ONLY	RETURN AIR CONNECTION 3 ONLY	RETURN AIR COMBINATIONS OF 1, 2, AND 3
066,060, -22 AND -20 MODELS	YES	NO	NO	NO
ALL OTHER MODELS	YES	YES	YES	YES

A02162

Fig. 21 – Horizontal Return Air Configurations and Restrictions

GAS PIPING

Gas piping must be installed in accordance with national and local codes. Refer to current edition of NFGC in the U.S.

Installations must be made in accordance with all authorities having jurisdiction. If possible, the gas supply line should be a separate line running directly from meter to furnace.

NOTE: In the state of Massachusetts:

1. Gas supply connections MUST be performed by a licensed plumber or gas fitter.
2. When flexible connectors are used, the maximum length shall not exceed 36 in. (915 mm).
3. When lever handle type manual equipment shutoff valves are used, they shall be T-handle valves.
4. The use of copper tubing for gas piping is NOT approved by the state of Massachusetts.

⚠ WARNING

FIRE OR EXPLOSION HAZARD

Failure to follow this warning could result in personal injury, death, and/or property damage.

Never purge a gas line into a combustion chamber. Never test for gas leaks with an open flame. Use a commercially available soap solution made specifically for the detection of leaks to check all connections. A fire or explosion may result causing property damage, personal injury or loss of life.

⚠ WARNING

FIRE OR EXPLOSION HAZARD

Failure to follow this warning could result in personal injury, death, and/or property damage.

Use proper length of pipe to avoid stress on gas control manifold and gas valve.

⚠ WARNING

FIRE OR EXPLOSION HAZARD

Failure to follow this warning could result in personal injury, death, and/or property damage.

Gas valve inlet and/or inlet pipe must remain capped until gas supply line is permanently installed to protect the valve from moisture and debris. Also, install a sediment trap in the gas supply piping at the inlet to the gas valve.

Refer to Table 8 for recommended gas pipe sizing. Risers must be used to connect to furnace and to meter. Support all gas piping with appropriate straps, hangers, etc. Use a minimum of 1 hanger every 6 ft. (1.8 M). Joint compound (pipe dope) should be applied sparingly and only to male threads of joints. Pipe dope must be resistant to the action of propane gas.

Table 8 – Maximum Capacity of Pipe

Nominal:	1/2 (12.7)	3/4 (19.0)	1 (25.4)	1-1/4 (31.8)	1-1/2 (38.1)
Actual ID:	**0.622**	**0.824**	**1.049**	**1.380**	**1.610**
Length (ft)	**Capacity in Cubic Feet of Gravity**				
10 (3.0)	172	360	678	1390	2090
20 (6.0)	118	247	466	957	1430
30 (9.1)	95	199	374	768	1150
40 (12.1)	81	170	320	657	985
50 (15.2)	72	151	284	583	873

NOTE: Cubic ft. of natural gas per hr for gas pressures of 0.5 psig (14-in. w.c.) or less and a pressure drop of 0.5-in. w.c. (based on a 0.60 specific gravity gas). Ref: Chapter 6 current edition of NFPA 54/ANSI Z223.1.

⚠ WARNING

FIRE OR EXPLOSION HAZARD

A failure to follow this warning could result in personal injury, death, and/or property damage.

If local codes allow the use of a flexible gas appliance connector, always use a new listed connector. Do not use a connector which has previously served another gas appliance. Black iron pipe shall be installed at the furnace gas control valve and extend a minimum of 2-in. (51 mm) outside the furnace.

⚠ CAUTION

FURNACE DAMAGE HAZARD

Failure to follow this caution may result in furnace damage.

Connect gas pipe to furnace using a backup wrench to avoid damaging gas controls and burner misalignment.

An accessible manual equipment shutoff valve MUST be installed external to furnace casing and within 6 ft. (1.8 M) of furnace. A 1/8-in. (3 mm) NPT plugged tapping, accessible for test gauge connection, MUST be installed immediately upstream of gas supply connection to furnace and downstream of manual equipment shutoff valve.

NOTE: The furnace gas control valve inlet pressure tap connection is suitable to use as test gauge connection providing test pressure DOES NOT exceed maximum 0.5 psig (14-in. w.c.) stated on gas control valve, see Fig. 22.

Some installations require gas entry on right side of furnace (as viewed in upflow), see Fig. 23.

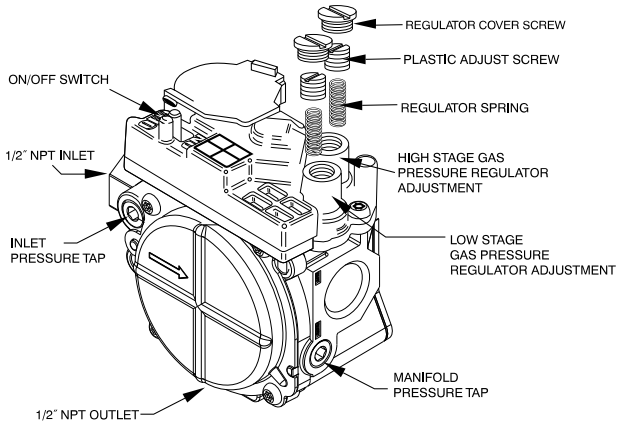

A04167

Fig. 22 – Redundant Automatic Gas Control Valve

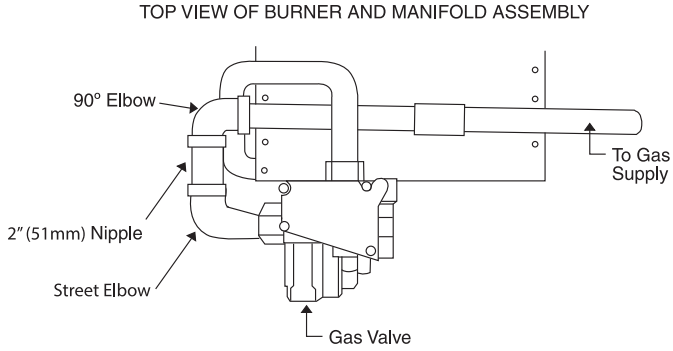

A08551

Fig. 23 – Burner and Manifold

Install a sediment trap in riser leading to furnace, see Fig. 24. Connect a capped nipple into lower end of tee. Capped nipple should extend below

level of furnace gas controls. Place a ground joint union between furnace gas control valve and exterior manual equipment gas shutoff valve.

A 1/8-in. (3 mm) NPT plugged tapping, accessible for test gauge connection, MUST be installed immediately upstream of gas supply connection to furnace and downstream of manual equipment shutoff valve.

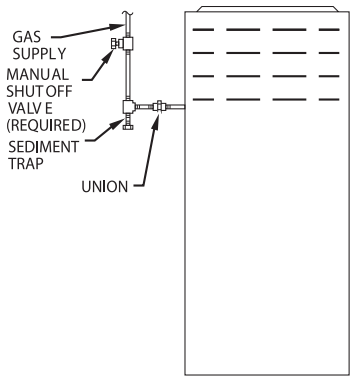

A02035

Fig. 24 – Typical Gas Pipe Arrangement

Piping should be pressure and leak tested in accordance with the current addition of the NFPA 54/ANSI Z223 in the United States, local, and national plumbing and gas codes before the furnace has been connected. After all connections have been made, purge lines and check for leakage at furnace prior to operating furnace.

If pressure exceeds 0.5 psig (14-in. w.c.), gas supply pipe must be disconnected from furnace and capped before and during supply pipe pressure test. If test pressure is equal to or less than 0.5 psig (14-in. w.c.), turn off electric shutoff switch located on furnace gas control valve and accessible manual equipment shutoff valve before and during supply pipe pressure test. After all connections have been made, purge lines and check for leakage at furnace prior to operating furnace.

The gas supply pressure shall be within the maximum and minimum inlet supply pressures marked on the rating plate with the furnace burners ON and OFF.

ELECTRICAL CONNECTIONS

See Fig. 25 for field wiring diagram showing typical field 115-V wiring. Check all factory and field electrical connections for tightness.

Field-supplied wiring shall conform with limitations of 63°F (33°C) rise.

⚠ WARNING

ELECTRICAL SHOCK, FIRE OR EXPLOSION HAZARD

Failure to follow safety warnings could result in dangerous operation, serious injury, death or property damage.

Improper servicing could result in dangerous operation, serious injury, death or property damage.

- Before servicing, disconnect all electrical power to furnace.
- When servicing controls, label all wires prior to disconnection. Reconnect wires correctly.
- Verify proper operation after servicing.
- Always reinstall access doors after completing service and maintenance.

⚠ WARNING

ELECTRICAL SHOCK HAZARD

Failure to follow this warning could result in personal injury or death.

Blower access panel door switch opens 115-V power to control. No component operation can occur. Do not bypass or close switch with panel removed.

⚠ WARNING

ELECTRICAL SHOCK AND FIRE HAZARD

Failure to follow this warning could result in personal injury, death, or property damage.

The cabinet MUST have an uninterrupted or unbroken ground according to NEC NFPA 70 or local codes to minimize personal injury if an electrical fault should occur. This may consist of electrical wire, conduit approved for electrical ground or a listed, grounded power cord (where permitted by local code) when installed in accordance with existing electrical codes. Refer to the power cord manufacturer's ratings for proper wire gauge. Do not use gas piping as an electrical ground.

⚠ CAUTION

FURNACE MAY NOT OPERATE HAZARD

Failure to follow this caution may result in intermittent furnace operation.

Furnace control must be grounded for proper operation or else control will lock out. Control must remain grounded through green/yellow wire routed to gas valve and manifold bracket screw.

115V Wiring

Verify that the voltage, frequency, and phase correspond to that specified on unit rating plate. Also, check to be sure that service provided by utility is sufficient to handle load imposed by this equipment. Refer to rating plate or Table 9 for equipment electrical specifications.

U.S. Installations: Make all electrical connections in accordance with National Electrical Code (NEC) NFPA 70 and any local codes or ordinances that might apply.

Use a separate, fused branch electrical circuit with a properly sized fuse or circuit breaker for this furnace. See Table 9 for wire size and fuse specifications. A readily accessible means of electrical disconnect must be located within sight of the furnace.

NOTE: Proper polarity must be maintained for 115V wiring. If polarity is incorrect, control LED status indicator light flash rapidly and status code (⁞☐ . ⁞) is displayed. The furnace will NOT operate.

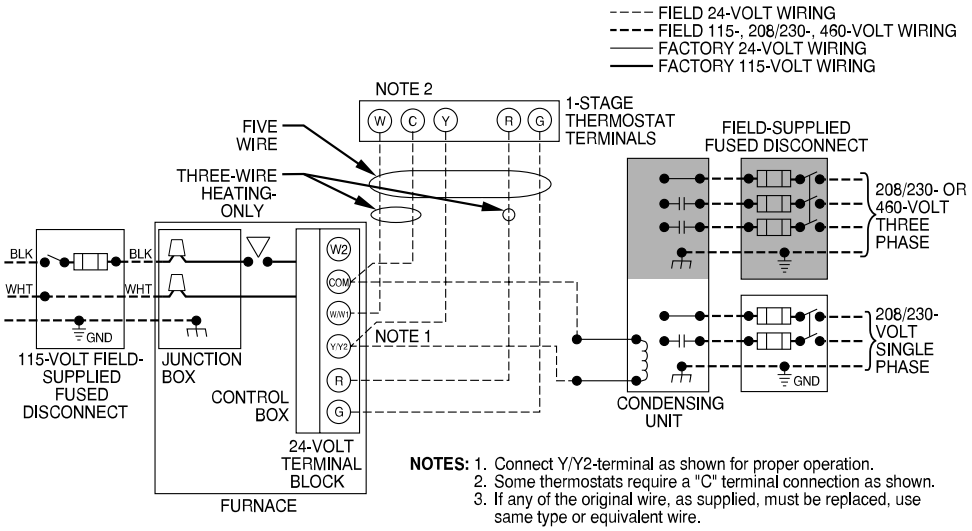

Fig. 25 – Field Wiring Diagram

Table 9 – Electrical Data

FURNACE SIZE	VOLTS-HERTZ-PHASE	OPERATING VOLTAGE RANGE*		MAX. UNIT AMPS	UNIT AMPACITY†	MIN. WIRE GAUGE	MAX. WIRE LENGTH - FT (M)‡		MAX. FUSE OR CKT BKR AMPS **
		Max.	Min.				Feet	Meters	
045C17--12	115-60-1	127	104	10.5	9.2	14	25	7.9	15
070C14--12	115-60-1	127	104	8.0	6.7	14	34	10.4	15
070C17--16	115-60-1	127	104	10.5	9.2	14	26	7.9	15
070C21--20	115-60-1	127	104	13.8	12.5	12	31	9.4	20
090C17--16	115-60-1	127	104	8.6	6.7	14	32	9.8	15
090C21--20	115-60-1	127	104	14.4	12.5	12	31	9.4	20
110C21--20	115-60-1	127	104	14.7	12.5	12	30	9.1	20
135C24--22	115-60-1	127	104	13.9	11.7	12	32	9.8	20

*. Permissible limits of the voltage range at which the unit operates satisfactorily.
†. Unit ampacity = 125 percent of largest operating component's full load amps plus 100 percent of all other potential operating components' (EAC, humidifier, etc.) full load amps.
‡. Length shown is as measured 1 way along wire path between furnace and service panel for maximum 2 percent voltage drop.
**. Time-delay type is recommended.

⚠ WARNING

FIRE HAZARD

Failure to follow this warning could result in personal injury, death, or property damage.

Do not connect aluminum wire between disconnect switch and furnace. Use only copper wire, see Fig. 26.

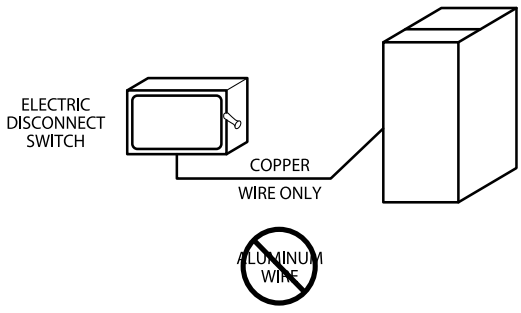

A190279

Fig. 26 – Field-Supplied External Electrical Box on Furnace Casing

J-BOX RELOCATION

NOTE: If factory location of J-Box is acceptable, go to next section (ELECTRICAL CONNECTION TO J-BOX).

NOTE: On 14-in. (356 mm) wide casing models, the J-Box shall not be relocated to other side of furnace casing when the vent pipe is routed within the casing.

1. Remove and save two screws holding J-Box, see Fig. 27.

NOTE: The J-Box cover need not be removed from the J-Box in order to move the J-Box. Do NOT remove green ground screw inside J-Box, see Fig. 27.

2. Cut wire tie on loop in furnace wires attached to J-Box.
3. Move J-Box to desired location.
4. Fasten J-Box to casing with the two screws removed in Step 1.
5. Route J-Box wires within furnace away from sharp edges, rotating parts and hot surfaces.

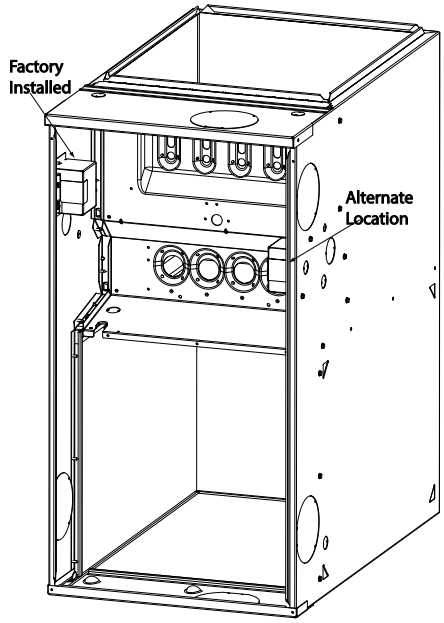

A10291

Fig. 27 – Relocating J-Box

Electrical Connection to J-Box Electrical Box on Furnace Casing Side

WARNING

FIRE OR ELECTRICAL SHOCK HAZARD

Failure to follow this warning could result in personal injury, death, or property damage.

High voltage field connections must be located in J-Box with furnace or in filed supplied external disconnect mounted to furnace.

If field-supplied manual disconnect switch is to be mounted on furnace casing side, select a location where a drill or fastener cannot damage electrical or gas components.

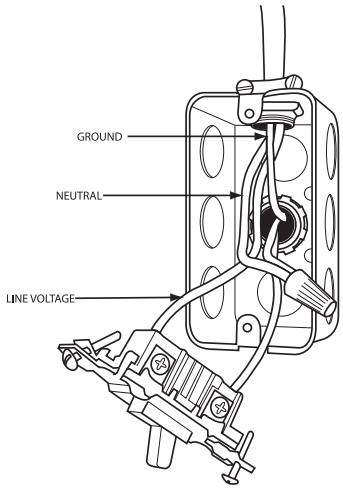

A190278

Fig. 28 – Field-Supplied Electrical Box on Furnace Casing

1. Select and remove a hole knockout in the casing where the electrical box is to be installed.

NOTE: Check that duct on side of furnace will not interfere with installed electrical box.

2. Remove the desired electrical box hole knockout and position the hole in the electrical box over the hole in the furnace casing.
3. Fasten the electrical box to casing by driving two field-supplied screws from inside electrical box into casing steel.
4. Remove and save two screws holding J-Box, see Fig. 27.
5. Pull furnace power wires out of 1/2-in. (12 mm) diameter hole in J-Box. Do not loosen wires from strain-relief wire-tie on outside of J-Box.
6. Route furnace power wires through holes in casing and electrical box and into electrical box.
7. Pull field power wires into electrical box.
8. Remove cover from furnace J-Box.
9. Route field ground wire through holes in electrical box and casing, and into furnace J-Box.
10. Reattach furnace J-Box to furnace casing with screws removed in Step 4.
11. Secure field ground wire to J-Box green ground screw.
12. Complete electrical box wiring and installation. Connect line voltage leads, see Fig. 28. Use best practices (NEC in U.S. for wire bushings, strain relief, etc.
13. Reinstall cover to J-Box. Do not pinch wires between cover and bracket.

Power Cord Installation in Furnace J-Box

NOTE: Power cords must be able to handle the electrical requirements listed in Table 9. Refer to power cord manufacturer's listings.

1. Remove cover from J-Box.
2. Route listed power cord through 7/8-in. (22 mm) diameter hole in J-Box.
3. Secure power cord to J-Box bracket with a strain relief bushing or a connector approved for the type of cord used.
4. Secure field ground wire to green ground screw on J-Box bracket.
5. Connect line voltage leads, see Fig. 25.
6. Reinstall cover to J-Box. Do not pinch wires between cover and bracket.

BX Cable Installation in Furnace J-Box

1. Remove cover from J-Box.
2. Route BX cable into 7/8-in. (22 mm) diameter hole in J-Box.
3. Secure BX cable to J-Box bracket with connectors approved for the type of cable used.
4. Secure field ground wire to green ground screw on J-Box bracket.
5. Connect line voltage leads, see Fig. 25.
6. Reinstall cover to J-Box. Do not pinch wires between cover and bracket.

24V Wiring

Make field 24V connections at the 24V terminal strip, Fig. 25. Connect terminal Y/Y2 as shown in Fig. 25 for proper cooling operation. Use only AWG No. 18, color-coded, copper thermostat wire.

The 24V circuit contains an automotive-type, 3-amp. fuse located on the control. Any direct shorts during installation, service, or maintenance could cause this fuse to blow. If fuse replacement is required, use ONLY a 3-amp. fuse of identical size.

TEMPERATURE SENSOR

The furnace comes with a Return Air Temperature (RAT) sensor installed on the control board and a Supply Air Temperature (SAT) for installation in the field.

Install Supply Air Temperature (SAT) Sensor

1. Locate SAT sensor in main supply trunk after furnace and cooling coil. Placing the SAT sensor after the first bend in main supply trunk will yield the best readings. If this is not possible, placing the sensor farther down the main trunk will allow for more mixing and better results.

2. Drill a 1/4-in. hole at location in supply trunk where sensor will be installed.
3. Insert sensor in hole and use as a template to mark the two (2) mounting holes.
4. Drill two (2) 1/16-in. holes to accept No. 8 screws through pre-drilled holes in duct temperature sensor back plate.
5. Use two (2) provided No. 8 sheet metal screws to mount the supply air temperature sensor to the system.
6. Route SAT wire leads into furnace blower compartment along with the thermostat wires. Use provided grommet to protect the wires through the furnace casing.
7. Connect sensor wire leads to furnace control at the screw terminal marked SAT. If additional wire length is needed, thermostat wire and wire nuts can be used to extend the wires.

NOTE: When communications with the thermostat is present, the green COMM light on the furnace control will be on.

Temperature Display

The SAT and RAT temperatures can be displayed on the control board 3 digit display. On the 3 digit display, navigate to (LO) and select F or C (Default is off). When enabled, the display will cycle through the current operating mode, SAT, RAT, and temperature differential during heating, cooling and heat pump operation. The temperatures will not be displayed in other operating modes.

ACCESSORIES

1. Electronic Air Cleaner (EAC)
   Connect an accessory Electronic Air Cleaner (if used) using 1/4-in female quick connect terminals to the two male 1/4-in quick-connect terminals on the control board marked EAC-1 and EAC-2. The terminals are rated for 115VAC, 1.0 amps maximum and are energized during blower motor operation, see Fig. 29.
2. Humidifier (HUM)
   Connect an accessory 24 VAC, 0.5 amp. maximum humidifier (if used) to the 1/4-in male quick-connect HUM terminal and COM/24V screw terminal on the control board thermostat strip. The HUM terminal is energized when the blower is operating during a call for heat, see Fig. 29.

NOTE: DO NOT connect furnace control HUM terminal to HUM (humidifier) terminal on Thermidistat©, Zone Controller or similar device. See Thermidistat, Zone Controller, thermostat, or controller manufacturer's instructions for proper connection.

NOTE: For 24V & 115V EAC or Humidifier Accessory details, see Accessory instructions.

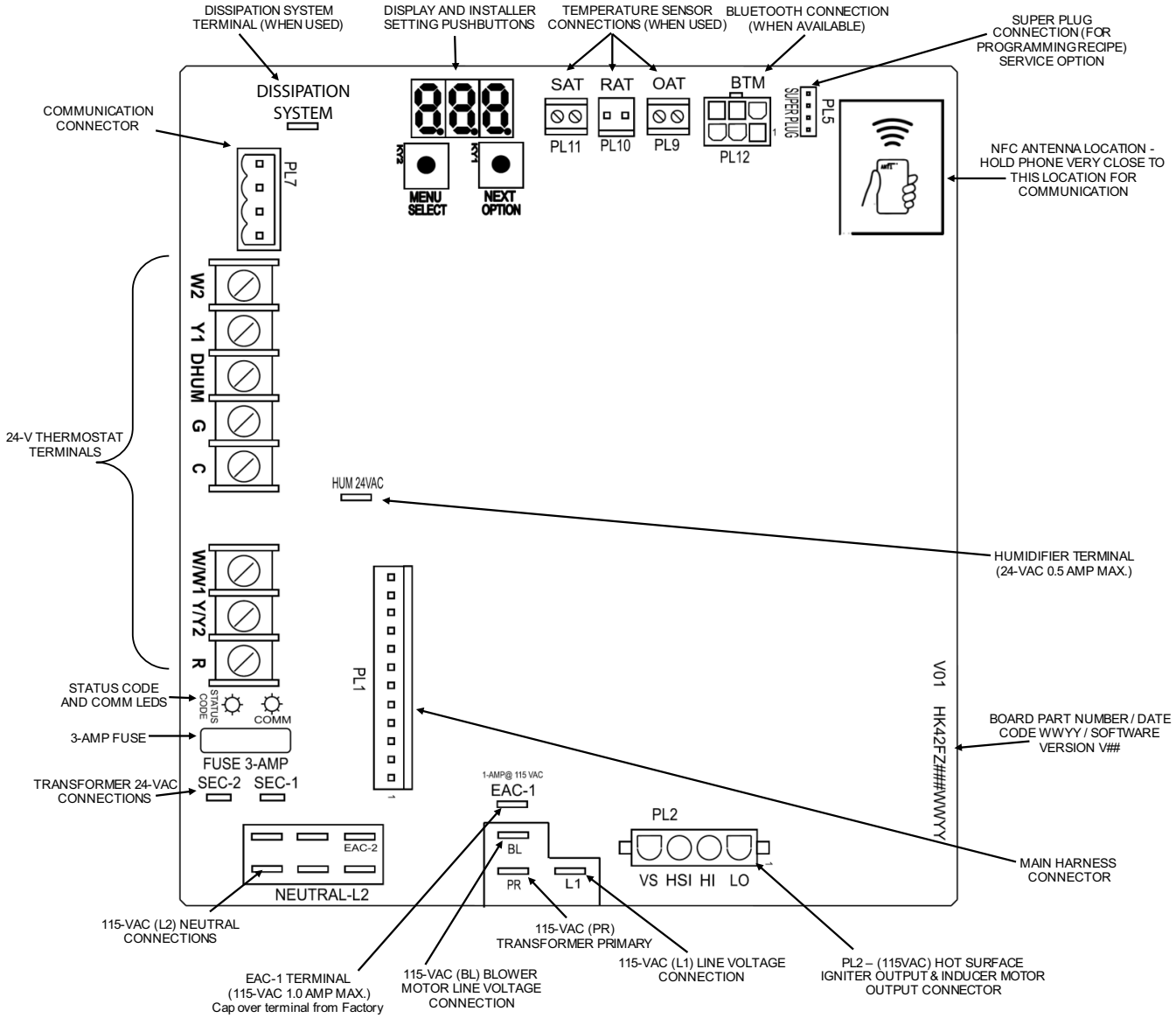

Fig. 29 – Variable Speed Furnace Control for ECM Blower Motor

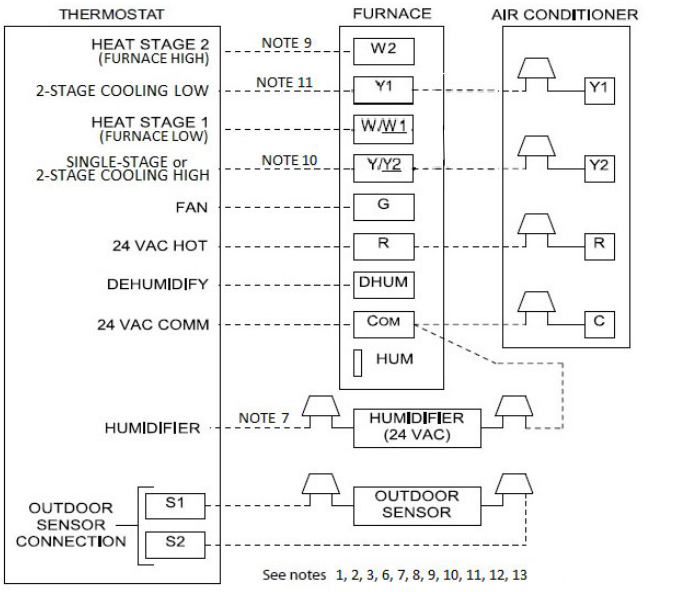

2-Stage Furnace with Air Conditioner

A230176

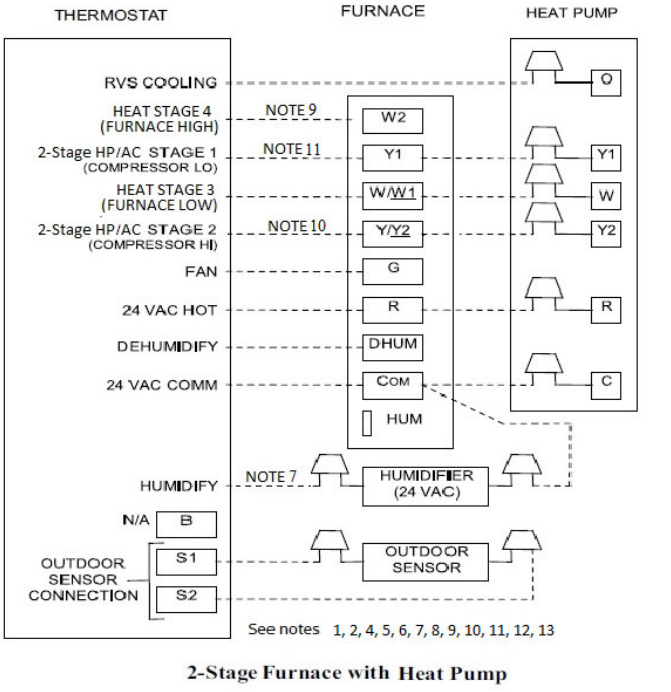

2-Stage Furnace with Heat Pump

A230177

Fig. 30 – Thermostat Connection for Two-Stage Furnace and A/C & Heat Pump

Notes for thermostat drawings:

1. Thermostat output signals may vary. Consult thermostat installation instructions for more information.
2. Refer to outdoor equipment Installation Instructions for additional information and setup procedure.
3. Configure the thermostat for air conditioner installations. Refer to thermostat instructions.
4. Configure thermostat for HYBRID HEAT® dual fuel operation. Refer to thermostat instructions.
5. Heat pump MUST have a high pressure switch for HYBRID HEAT® dual fuel applications.
6. For Single-stage AC or HP, configure thermostat for single-stage compressor operation. Refer to thermostat instructions.
7. NO connection should be made to the furnace HUM terminal when using a thermostat with a 24 volt humidifier output.
8. For Two-Stage AC or HP, thermostat may be configured for two-stage compressor operation, allowing the thermostat to control staging, or thermostat may be configured for single stage operation, allowing furnace control to control staging. Refer to note 10 and thermostat instructions.
9. Optional connection - See Sequence of Operations, Heating adaptive mode for additional information. If two-stage heating thermostat output is connected to W/W1 and W2 on Two-stage furnace control, Heating Thermostat Type (HtE) setting on furnace control should be set to "2St" to allow thermostat to control furnace staging.
10. For Two-stage outdoor equipment, connection is Optional - See Cooling sequence of operations (adaptive mode) for additional information. If two-stage HP/cooling thermostat is connected to Y1 and Y/Y2 on Two-stage furnace control board, Cooling Thermostat Type (CtE) (setting on furnace control) should be set to "2St" to allow thermostat to control outdoor unit staging.
11. For Single-stage outdoor equipment, connect thermostat HP or AC output to Y/Y2 of furnace control.
12. Configure Dehumidify function to remove 24 VAC from Dehum terminal on a demand to dehumidify. Consult thermostat installation instructions for more information.
13. Thermostat terminal connection order on furnace control may vary-reference furnace control labeling for designations.

Field installed jumper required for thermostat sensor installations using single-stage AC or HP.

VENTING

The furnace shall be connected to a listed factory built chimney or vent, or a clay-tile lined masonry or concrete chimney. Venting into an unlined masonry chimney or concrete chimney is prohibited.

When an existing Category I furnace is removed or replaced, the original venting system, may no longer be sized to properly vent the attached appliances. An improperly sized Category I venting system could cause the formation of condensate in the furnace and vent, leakage of condensate and combustion products, and spillage of combustion products into the living space.

Vent system or vent connectors may need to be resized. Vent systems or vent connectors must be sized to approach minimum size as determined using appropriate table found in the current edition of NFPA 54/ANSI Z223 .

General Venting Requirements

Follow all safety codes for proper vent sizing and installation requirements, including local building codes, the National Fuel Gas Code NFPA 54/ANSI Z223.1, Parts 12 and 13 in the United States, the local building codes, and furnace and vent manufacturers' instructions.

These furnaces are design-certified as Category I furnaces in accordance with ANSI Z21.47/CSA 2.3 and operate with a non-positive vent static pressure to minimize the potential for vent gas leakage. Category I furnaces operate with a flue loss not less than 17 percent to minimize the potential for condensation in the venting system. These furnaces are approved for common venting and multistory venting with other fan assisted or draft hood equipped appliances in accordance with the NFGC, the local building codes, and furnace and vent manufacturers' instructions.

The following information and warning must be considered in addition to the requirements defined in the NFPA 54/ANSI Z223.1.

⚠ WARNING

CARBON MONOXIDE POISONING HAZARD

Failure to follow this warning could result in personal injury or death. Do not bypass the draft safeguard switch, as an unsafe condition could exist which must be corrected.

1. If a vent (common or dedicated) becomes blocked, the furnace will be shut off by the draft safeguard switch located on the vent elbow.
2. Two-stage furnaces require Type B vent connectors outside the casing in all configurations. Single wall vent connector may be used inside the furnace casing with the transition to Type B vent outside the furnace casing. Size the connector so that the FAN-Min vent connector capacity is equal to or lower than the low fire rate of the furnace and the FAN-Max vent connector capacity is equal to or higher than the furnace high fire rate.
3. Do not vent this Category I furnace into a single wall dedicated or common vent. The dedicated or common vent is considered to be the vertical portion of the vent system that terminates outdoors.
4. Vent connectors serving Category I furnaces shall not be connected into any portion of a mechanical draft system operating under positive pressure.
5. Do not vent this appliance with any solid fuel burning appliance.
6. Category I furnaces must be vented vertically or nearly vertically unless equipped with a listed mechanical venter. See Sidewall Venting on p24.
7. Do not vent this appliance into an unlined masonry chimney. (Refer to Chimney Inspection Chart, Fig. 31.

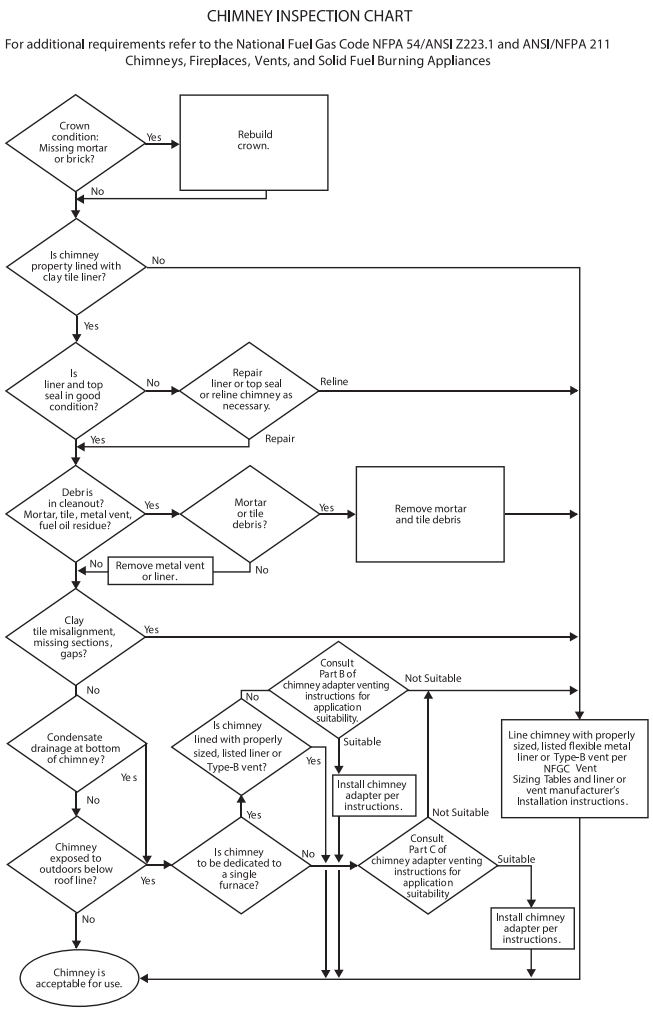

Fig. 31 – Chimney Inspection Chart

Masonry Chimney Requirement

NOTE: These furnaces are CSA design-certified for use in exterior tile-lined masonry chimneys with a factory accessory Chimney Adapter Kit. Refer to the furnace rating plate for correct kit usage. The Chimney Adapter Kits are for use with ONLY furnaces having a Chimney Adapter Kit number marked on the furnace rating plate.

If a clay tile-lined masonry chimney is being used and it is exposed to the outdoors below the roof line, relining might be required. Chimneys shall conform to the Standard for Chimneys, Fireplaces, Vents, and Solid Fuel Burning Appliances ANSI/NFPA 211 in the United States and must be in good condition.

U.S.A. – Refer to Sections 13.1.8 and 13.2.20 of the NFPA 54/ANSI Z223.1 or the authority having jurisdiction to determine whether relining is required. If relining is required, use a properly sized listed metal liner, Type-B vent, or a listed alternative venting design.

NOTE: See the NFPA 54/ANSI Z223.1 13.1.9 and 13.2.20 regarding alternative venting design and the exception, which cover installations such as our Chimney Adapter Kits which are listed for use with these furnaces. See Product Data Sheet for accessory listing.

⚠ WARNING

CARBON MONOXIDE POISONING HAZARD

Failure to follow the steps outlined below for each appliance connected to the venting system being placed into operation could result in carbon monoxide poisoning or death.

The following steps shall be followed for each appliance connected to the venting system being placed into operation, while all other appliances connected to the venting system are not in operation:

- Seal any unused openings in venting system.
- Inspect the venting system for proper size and horizontal pitch, as required in the National Fuel Gas Code, NFPA 54/ANSI Z223.1 and these instructions. Determine that there is no blockage or restriction, leakage, corrosion and other deficiencies, which could cause an unsafe condition.
- As far as practical, close all building doors and windows and all doors between the space in which the appliance(s) connected to the venting system are located and other spaces of the building.
- Close fireplace dampers.
- Turn on clothes dryers and any appliance not connected to the venting system. Turn on any exhaust fans, such as range hoods and bathroom exhausts, so they are operating at maximum speed. Do not operate a summer exhaust fan.
- Follow the lighting instructions. Place the appliance being inspected into operation. Adjust the thermostat so appliance is operating continuously.
- Test for spillage from draft hood equipped appliances at the draft hood relief opening after 5 minutes of main burner operation. Use the flame of a match or candle.
- If improper venting is observed during any of the above tests, the venting system must be corrected in accordance with the National Fuel Gas Code, NFPA 54/ANSI Z223.1.
- After it has been determined that each appliance connected to the venting system properly vents when tested as outlined above, return doors, windows, exhaust fans, fireplace dampers and any other gas-fired burning appliance to their previous conditions of use.

The Chimney Adapter Kit is a listed alternative venting system for these furnaces. See the kit instructions for complete details.

This furnace is permitted to be vented into a clay tile-lined masonry chimney that is exposed to the outdoors below the roof line, provided:

1. Vent connector is Type-B double-wall, and
2. This furnace is common vented with at least 1 draft hood equipped appliance, and
3. The combined appliance input rating is less than the maximum capacity given in Table 10, and
4. The input rating of each space heating appliance is greater than the minimum input rating given in Table 11 for the local 99% Winter Design Temperature. Chimneys having internal areas greater than 38 sq. in. (24516 sq. mm) require furnace input ratings greater than the input ratings of these furnaces. See footnote at bottom of Table 11, and
5. The authority having jurisdiction approves.

Exterior Masonry Chimney FAN + NAT Installation with Type-B Double Wall Vent Connectors[E] NFPA & AGA

Table 10 – Combined Appliance Maximum Input Rating in Thousands of BTUh per Hour

VENT HEIGHT FT (M)	INTERNAL AREA OF CHIMNEY SQ. IN. (SQ. MM)			
	12 (7741)	19 (12258)	28 (18064)	38 (24516)
6 (1.8)	74	119	178	257
8 (2.4)	80	130	193	279
10 (3.0)	84	138	207	299
15 (4.5)	NR	152	233	334
20 (6.0)	NR	NR	250	368
30 (9.1)	NR	NR	NR	404

If all these conditions cannot be met, an alternative venting design can be used, such as the chimney adapter kit with a furnace listed for use with the kit, a listed chimney-lining system, or a Type-B common vent.

Table 11 – Minimum Allowable Input Rating of Space-Heating Appliance in Thousands of BTUh per Hour

VENT HEIGHT FT. (M)	INTERNAL AREA OF CHIMNEY SQ. IN. (SQ. MM)			
	12 (7741)	19 (12258)	28 18064)	38 (24516)
Local 99% Winter Design Temperature: 17 to 26 degrees F*				
6	0	55	99	141
8	52	74	111	154
10	NR	90	125	169
15	NR	NR	167	212
20	NR	NR	212	258
30	NR	NR	NR	362
Local 99% Winter Design Temperature: 5 to 16 degrees F*				
6	NR	78	121	166
8	NR	94	135	182
10	NR	111	149	198
15	NR	NR	193	247
20	NR	NR	NR	293
30	NR	NR	NR	377
Local 99% Winter Design Temperature: -10 to 4 degrees F*				
6	NR	NR	145	196
8	NR	NR	159	213
10	NR	NR	175	231
15	NR	NR	NR	283
20	NR	NR	NR	333
30	NR	NR	NR	NR
Local 99% Winter Design Temperature: -11 degrees F or lower				
Not recommended for any vent configuration.				

*. The 99.6% heating (db) temps found in the 1997 or 2001 ASHRAE Fundamentals Handbook, Climatic Design Information chapter 2A (U.S.) and 2A (Canada) or the 2005 ASHRAE Fundamentals handbook, Climatic Design Information chapter, and the CD-ROM included with the 2005 ASHRAE Fundamentals Handbook.

Inspections before the sale and at the time of installation will determine the acceptability of the chimney or the need for repair and/or (re)lining. Refer to Fig. 31 to perform a chimney inspection. If the inspection of a previously used tile-lined chimney:

a. Shows signs of vent gas condensation, the chimney should be relined in accordance with local codes and the authority having jurisdiction. The chimney should be relined with a listed metal liner, Type-B vent, or a listed chimney adapter kit shall be used to reduce condensation. If a condensate drain is required by local code, refer to the NFPA 54/ANSI Z223.1, Section 12.10 for additional information on condensate drains.

b. Indicates the chimney exceeds the maximum permissible size in the tables, the chimney should be rebuilt or relined to conform to the requirements of the equipment being installed and the authority having jurisdiction.

A chimney without a clay tile liner, which is otherwise in good condition, shall be rebuilt to conform to ANSI/NFPA 211 or be lined with a UL listed metal liner or UL listed Type-B vent. Relining with a listed metal liner or Type-B vent is considered to be a vent-in-a-chase.

If a metal liner or Type-B vent is used to line a chimney, no other appliance shall be vented into the annular space between the chimney and the metal liner.

Appliance Application Requirements

Appliance operation has a significant impact on the performance of the venting system. If the appliances are sized, installed, adjusted, and operated properly, the venting system and/or the appliances should not suffer from condensation and corrosion. The venting system and all appliances shall be installed in accordance with applicable listings, standards, and codes.

The furnace should be sized to provide 100 percent of the design heating load requirement plus any margin that occurs because of furnace model size capacity increments. Heating load estimates can be made using approved methods available from Air Conditioning Contractors of America (Manual J); American Society of Heating, Refrigerating, and Air-Conditioning Engineers; or other approved engineering methods. Excessive oversizing of the furnace could cause the furnace and/or vent to fail prematurely.

When a metal vent or metal liner is used, the vent must be in good condition and be installed in accordance with the vent manufacturer's instructions.

To prevent condensation in the furnace and vent system, the following precautions must be observed:

1. The return-air temperature must be at least 60°F db except for brief periods of time during warm-up from setback at no lower than 55°F (13°C) db or during initial start-up from a standby condition.
2. Adjust the gas input rate per the installation instructions. Low gas input rate causes low vent gas temperatures, causing condensation and corrosion in the furnace and/or venting system. Derating is permitted only for altitudes above 2000 ft. (610 M).
3. Adjust the air temperature rise to the midpoint of the rise range or slightly above. Low air temperature rise can cause low vent gas temperature and potential for condensation problems.
4. Set the thermostat heat anticipator or cycle rate to reduce short cycling.

⚠ CAUTION

BURN HAZARD

Failure to follow this caution may result in personal injury.

Hot vent pipe is within reach of small children when installed in downflow position.

See the following instruction.

Air for combustion must not be contaminated by halogen compounds which include chlorides, fluorides, bromides, and iodides. These compounds are found in many common home products such as detergent, paint, glue, aerosol spray, bleach, cleaning solvent, salt, and air freshener, and can cause corrosion of furnaces and vents. Avoid using such products in the combustion-air supply. Furnace use during construction of the building could cause the furnace to be exposed to halogen compounds, causing premature failure of the furnace or venting system due to corrosion.

Vent dampers on any appliance connected to the common vent can cause condensation and corrosion in the venting system. Do not use vent dampers on appliances common vented with this furnace.

Additional Venting Requirements

A 4-in. (102 mm) round vent elbow is supplied with the furnace. A 5-in. (127 mm) or 6- in. (152 mm) vent connector may be required for some model furnaces. A field-supplied 4-in. (102 mm) to 5-in. (127 mm) or 4-in. (102 mm) to 6-in. (152 mm) sheet metal increaser fitting is required when 5-in. (127 mm) or 6-in. (152 mm) vent connector is used. Refer to Table 12 to determine the minimum vertical vent height for various furnace and vent orientations. See Fig. 32 - Fig. 44 Venting Orientation for approved vent configurations.

NOTE: Vent connector length for connector sizing starts at furnace vent elbow. The 4-in. (102 mm) vent elbow is shipped for upflow configuration and may be rotated for other positions. Remove the three screws that secure vent elbow to furnace, rotate furnace vent elbow to position desired, reinstall screws. The factory-supplied vent elbow does NOT count as part of the number of vent connector elbows.

The vent connector can exit the furnace through one of five locations on the casing.

⚠ CAUTION

CUT HAZARD

Failure to follow this caution may result in personal injury.

Sheet metal parts may have sharp edges or burrs. Use care and wear appropriate protective clothing, safety glasses and gloves when handling parts, and servicing furnaces.

1. Attach the single wall vent connector to the furnace vent elbow, and fasten the vent connector to the vent elbow with at least two field-supplied, corrosion-resistant, sheet metal screws located 180° apart.

NOTE: An accessory flue extension is available to extend from the furnace elbow to outside the furnace casing. See Product Data Sheet for accessory listing. If flue extension is used, fasten the flue extension to the vent elbow with at least two field-supplied, corrosion-resistant, sheet metal screws located 180° apart. Fasten the vent connector to the flue extension with at least two field-supplied, corrosion resistant sheet metal screws located 180° apart.

2. Vent the furnace with the appropriate connector, see Fig. 32 thru Fig. 44)
3. Determine the correct location of the knockout to be removed.
4. Use a hammer and screwdriver to strike a sharp blow between the tie points and work the slug back and forth until the slug breaks free.

An accessory Vent Guard Kit is REQUIRED for downflow applications for use where the vent exits through the lower portion of the furnace casing. Refer to the Vent Guard Kit Instructions for complete details. See Product Data Sheet for accessory listing.

The horizontal portion of the venting system shall slope upwards not less than 1/4-in. per linear ft. (21 mm/m) from the furnace to the vent and shall be rigidly supported every 5 ft. (1.5 M) or less with metal hangers or straps to ensure there is no movement after installation.

Sidewall Venting

This furnace is not approved for direct sidewall horizontal venting.

Per section 12.4.3 of the NFPA 54/ANSI Z223.1, any listed mechanical venter may be used, when approved by the authority having jurisdiction.

Select the listed mechanical venter to match the BTUh input of the furnace being vented. Follow all manufacturer's installation requirements for venting and termination included with the listed mechanical venter.

Caution!! For the following furnace and vent orientations, use the minimum vertical heights as specified in Table 12. For all other orientations, follow exclusively the National Fuel Gas Code.

Table 12 – Recommended Minimum Vent Height Per Furnace and Vent Orientation

FURNACE ORIENTATION	VENT ORIENTATION	FURNACE INPUT (BTUH/HR)	MIN. VENT DIAMETER IN. (mm)*	MIN. VERTICAL VENT HEIGHT FT. (M)†
Downflow	Vent elbow left, then up Fig. 37	132,000 & 110,000	5 (127)	12 (3.6)
Horizontal Left	Vent elbow right, then up Fig. 40	132,000	5 (127)	7 (2.1)
Horizontal Left	Vent Elbow up Fig. 41	132,000	5 (127)	7 (2.1)
Downflow	Vent elbow up then left Fig. 33	110,000	5 (127)	10 (3.0)
Downflow	Vent elbow up, then right Fig. 38	110,000	5 (127)	10 (3.0)

*. 4-in. (102 mm) inside casing or vent guard
†. Including 4 in. (102 mm) vent section(s)

NOTE: All vent configurations must also meet National Fuel Gas Code venting requirements NFPA 54/ANSI Z223.

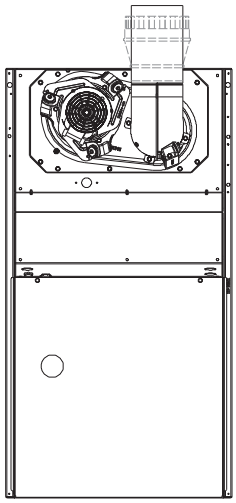

SEE NOTES: 1, 2, 4, 7, 8, 9 on the page following these figures

A03208

Fig. 32 – Upflow Application - Vent Elbow Up

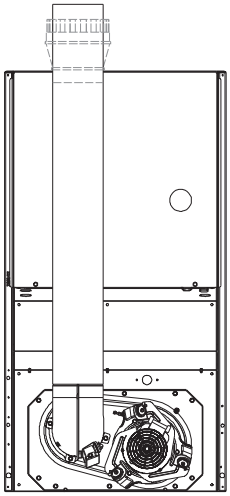

SEE NOTES: 1, 2, 4, 5, 7, 8, 9 on the page following these figures

A03211

Fig. 35 – Downflow Application - Vent Elbow Up

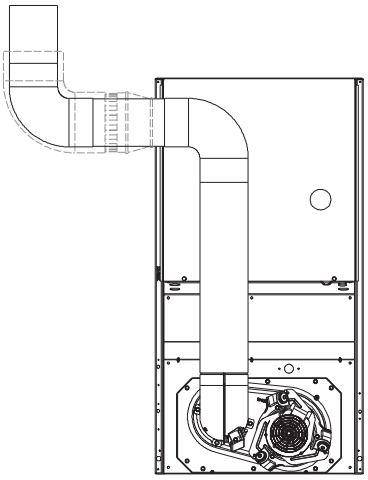

SEE NOTES: 1, 2, 3, 4, 5, 7, 8, 9 on the page following these figures

A03210

Fig. 33 – Downflow Application - Vent Elbow Up then Left

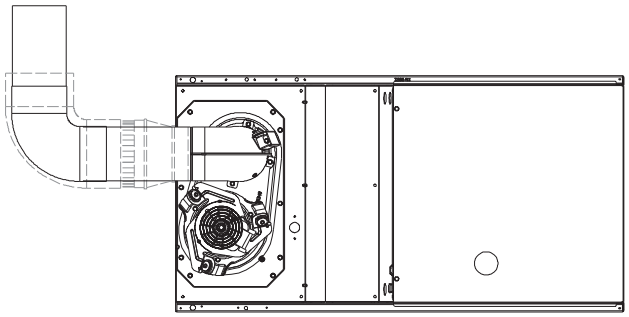

SEE NOTES: 1, 2, 4, 7, 8, 9 on the page following these figures

A03213

Fig. 36 – Horizontal Left Application - Vent Elbow Left

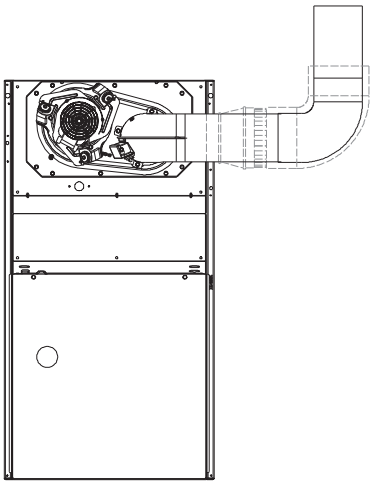

SEE NOTES: 1, 2, 3, 4, 7, 8, 9 on the page following these figures

A03209

Fig. 34 – Upflow Application - Vent Elbow Right

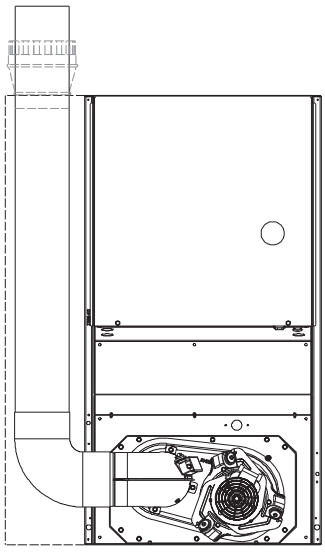

SEE NOTES: 1, 2, 4, 5, 6, 7, 8, 9 on the page following these figures

A03207

Fig. 37 – Downflow Application - Vent Elbow Left then Up

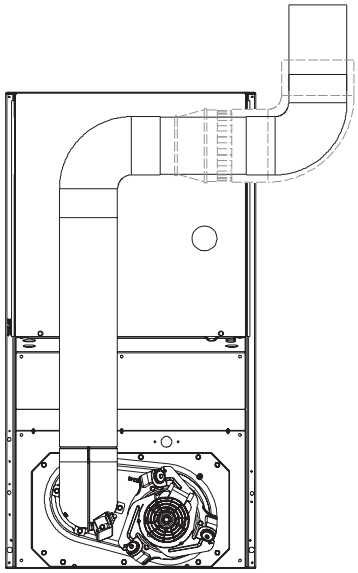

SEE NOTES: 1, 2, 3, 4, 5, 7, 8, 9 on the page following these figures

Fig. 38 – Downflow Application - Vent Elbow Up then Right A03212

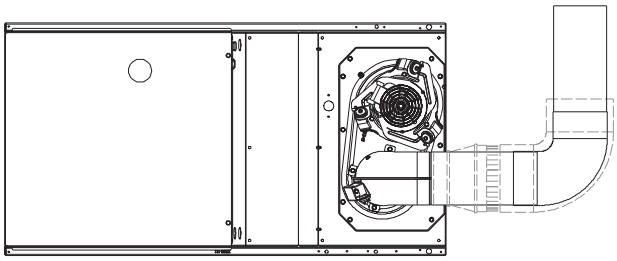

SEE NOTES: 1, 2, 4, 7, 8, 9 on the page following these figures

Fig. 39 – Horizontal Right Application-Vent Elbow Right A03218

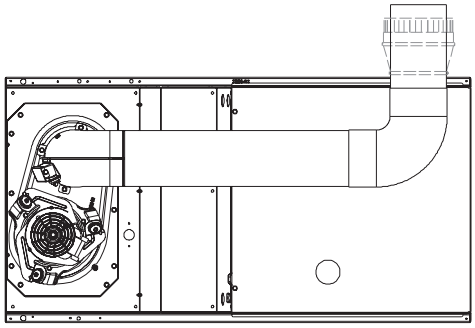

SEE NOTES: 1, 2, 4, 5, 7, 8, 9 on the page following these figures

Fig. 40 – Horizontal Left Application - Vent Elbow Right then Up A03214

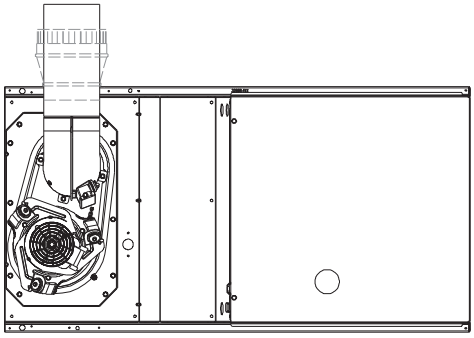

SEE NOTES: 1, 2, 4, 5, 7, 8, 9 on the page following these figures

Fig. 41 – Horizontal Left Application - Vent Elbow Up A03215

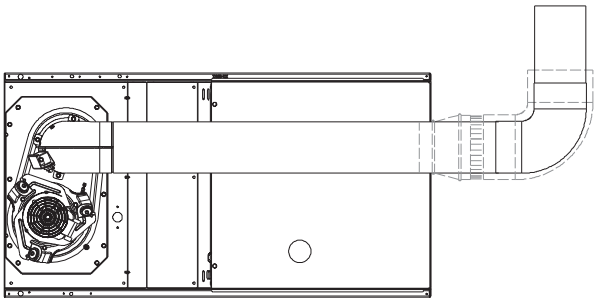

SEE NOTES: 1, 2, 4, 5, 7, 8, 9 on the page following these figures

Fig. 42 – Horizontal Left Application - Vent Elbow Right A03216

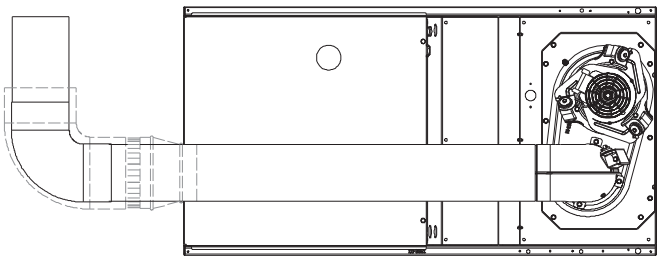

SEE NOTES: 1, 2, 4, 5, 7, 8, 9

Fig. 43 – Horizontal Right Application-Vent Elbow Left A02068

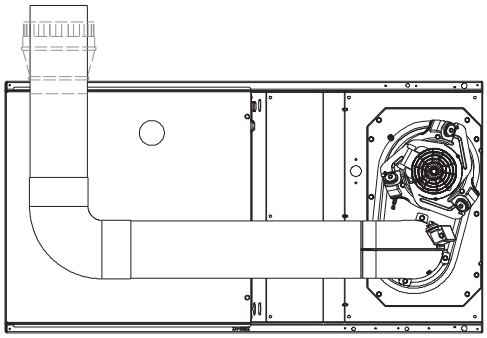

SEE NOTES: 1, 2, 4, 5, 7, 8, 9

Fig. 44 – Horizontal Right Application - Vent Elbow Left then Up A03219

Notes for Venting

1. For common vent, vent connector sizing and vent material: United States use the NFPA 54/ANSI Z223.1.
2. Immediately increase to 5-in. (102 mm) or 6-in. (152 mm) vent connector outside furnace casing when 5-in. (127 mm) vent connector is required, refer to Note 1 above.
3. Side outlet vent for upflow and downflow installations must use Type B vent immediately after exiting the furnace, except when factory-approved Downflow Vent Guard Kit is used in the downflow position. See Product Data Sheet for accessory listing.
4. Type-B vent where required, refer to Note 1 above.
5. A 4-in.(102 mm) single-wall (26 ga. min.) vent must be used inside furnace casing and when the factory-approved Downflow Vent Guard Kit is used external to the furnace. See Product Data Sheet for accessory listing.
6. Accessory Downflow Vent Guard Kit required in downflow installations with lower vent configuration. See Product Data Sheet for accessory listing.
7. Chimney Adapter Kit may be required for exterior masonry chimney applications. Refer to Chimney Adapter Kit for sizing and complete application details. See Product Data Sheet for accessory listing.
8. Secure vent connector to furnace elbow with (2) corrosion-resistant sheet metal screws, spaced approximately 180° apart.
9. Secure all other single wall vent connector joints with (3) corrosion resistant screws spaced approximately 120° apart. Secure Type-B vent connectors per vent connector manufacturer's recommendations.

AIRFLOW DELIVERY - CFM

Table 13 – 045C17--12 Airflow in CFM

Setting	ESP (in.w.c.)									
	0.1	0.2	0.3	0.4	0.5	0.6	0.7	0.8	0.9	1
1*	488							†		
2	525									
3	555									
4	600									
5	650									
6	700									
7	740									
8‡	800									
9	875									
10	925									
11	975									
12	1000									
13**	1050									
14	1138									
15	1200									
16	1225									
17	1300									
18	1400									1365
19	1480							1450	1405	1365
20	1600				1565	1530	1490	1450	1405	1365
Constant Fan Airflow (cfm)	Settings 1 - 13 (*488 - 1050)									
	Settings above 13 are not recommended									

	Heat Stage	
Setting	Low	High
Comfort 1	403	511
Comfort 2††	449	560
Efficiency 1	520	630
Efficiency 2	617	721

*. Constant fan default
†. Operation in this range is not recommended because high heat operation will exceed 1.0" w.c. ESP.
‡. Low Cooling Default
**. High cooling default
††. Heating default

For Heating Settings:

Eff1 airflow will give midpoint rise

Eff2 will increase heating airflow (when unit is capable)

Com2 will decrease heating airflow (default)

Com1 will give the lowest heating airflow

Table 14 – 070C14--12 Airflow in CFM

Setting	ESP (in.w.c.)									
	0.1	0.2	0.3	0.4	0.5	0.6	0.7	0.8	0.9	1
1*	400									
2	450									
3	488									
4	525									
5	555									
6	600									
7	650									
8	700									
9	740									
10‡	800									
11	875									
12	925									
13	975									
14	1000									
15**	1050									
16	1095									
17	1138									
18	1200									1160
19	1225								1200	1160
20	1300						1275	1235	1200	1160
21	1400			1390	1355	1315	1275	1235	1200	1160
Constant Fan Airflow (cfm)	Settings 1 - 16 (*400 - 1095)									
	Settings above 16 are not recommended									

	Heat Stage	
Setting	Low	High
Comfort 1	523	822
Comfort 2††	575	911
Efficiency 1	650	1030
Efficiency 2	748	1193

*. Constant fan default
†. Operation in this range is not recommended because high heat operation will exceed 1.0" w.c. ESP.
‡. Low Cooling Default
**. High cooling default
††. Heating default

For Heating Settings:

Eff1 airflow will give midpoint rise

Eff2 will increase heating airflow (when unit is capable)

Com2 will decrease heating airflow (default)

Com1 will give the lowest heating airflow

Table 15 – 070C17--16 Airflow in CFM

Setting	ESP (in.w.c.)									
	0.1	0.2	0.3	0.4	0.5	0.6	0.7	0.8	0.9	1
1*	488									
2	525									
3	555									
4	600									
5	650									
6	700									
7	740									
8	800									
9	875									
10	925									
11	975									
12	1000									
13‡	1050									
14	1138									
15	1200									
16	1225									
17	1300									
18**	1400									
19	1480									
20	1600							1570	1520	1480
Constant Fan Airflow (cfm)	Settings 1 - 12 (*488 - 1000)									
	Settings above 12 are not recommended									

	Heat Stage	
Setting	Low	High
Comfort 1	755	927
Comfort 2††	880	1035
Efficiency 1	1040	1175
Efficiency 2	1040	1175

*. Constant fan default
†. Operation in this range is not recommended because high heat operation will exceed 1.0" w.c. ESP.
‡. Low Cooling Default
**. High cooling default
††. Heating default

For Heating Settings:

Eff1 airflow will give midpoint rise

Eff2 will increase heating airflow (when unit is capable)

Com2 will decrease heating airflow (default)

Com1 will give the lowest heating airflow

Table 16 – 070C21--20 Airflow in CFM

Setting	ESP (in.w.c.)									
	0.1	0.2	0.3	0.4	0.5	0.6	0.7	0.8	0.9	1
1*	650									
2	700									
3	740									
4	800									
5	875									
6	925									
7	975									
8	1000									
9	1050									
10	1138									
11	1200									
12	1225									
13‡	1300									
14	1400									
15	1480									
16	1600									
17	1625									
18**	1750									
19	1850									
20	1911									1880
21	2000							1960	1920	1880
Constant Fan Airflow (cfm)	Settings 1 - 14 (*650 - 1400)									
	Settings above 14 are not recommended									

	Heat Stage	
Setting	Low	High
Comfort 1	755	915
Comfort 2††	856	1010
Efficiency 1	1025	1174
Efficiency 2	1025	1174

*. Constant fan default
†. Operation in this range is not recommended because high heat operation will exceed 1.0" w.c. ESP.
‡. Low Cooling Default
**. High cooling default
††. Heating default

For Heating Settings:

Eff1 airflow will give midpoint rise

Eff2 will increase heating airflow (when unit is capable)

Com2 will decrease heating airflow (default)

Com1 will give the lowest heating airflow

Table 17 – 090C17--16 Airflow in CFM

Setting	ESP (in.w.c.)									
	0.1	0.2	0.3	0.4	0.5	0.6	0.7	0.8	0.9	1
1*	400									
2	450									
3	488									
4	525									
5	555									
6	600									
7	650									
8	700									
9	740									
10	800									
11	875									
12	925									
13	975									
14	1000									
15‡	1050									
16	1138									
17	1200									
18	1225									
19	1300								1285	1225
20**	1400						1390	1340	1285	1225
21	1480					1460	1425	1390	1340	1285	1225
22	1600	1560	1525	1490	1460	1425	1390	1340	1285	1225
Constant Fan Airflow (cfm)	Settings 1 - 15 (*400 - 1050)									
	Settings above 15 are not recommended									

	Heat Stage	
Setting	Low	High
Comfort 1	769	986
Comfort 2††	853	1076
Efficiency 1	965	1175
Efficiency 2	1020	1325

*. Constant fan default
†. Operation in this range is not recommended because high heat operation will exceed 1.0" w.c. ESP.
‡. Low Cooling Default
**. High cooling default
††. Heating default

For Heating Settings:

Eff1 airflow will give midpoint rise

Eff2 will increase heating airflow (when unit is capable)

Com2 will decrease heating airflow (default)

Com1 will give the lowest heating airflow

Table 18 – 090C21--20 Airflow in CFM

Setting	ESP (in.w.c.)									
	0.1	0.2	0.3	0.4	0.5	0.6	0.7	0.8	0.9	1
1*	650									
2	700									
3	740									
4	800									
5	875				†					
6	925									
7	975									
8	1000									
9	1050									
10	1138									
11	1200									
12	1225									
13‡	1300									
14	1400									
15	1480									
16	1600									
17	1625									
18**	1750									
19	1850									
20	1910									
21	2000									
22	2110							2065	2005	
23	2180						2125	2065	2005	
24	2200					2185	2120	2065	2005	
Constant Fan Airflow (cfm)	Settings 1 - 14 (*650 - 1400)									
	Settings above 14 are not recommended									

	Heat Stage	
Setting	Low	High
Comfort 1	1024	1266
Comfort 2††	1186	1417
Efficiency 1	1445	1650
Efficiency 2	1650	1950

*. Constant fan default
†. Operation in this range is not recommended because high heat operation will exceed 1.0" w.c. ESP.
‡. Low cooling default
**. High cooling default
††. Heating default

For Heating Settings:

Eff1 airflow will give midpoint rise

Eff2 will increase heating airflow (when unit is capable)

Com2 will decrease heating airflow (default)

Com1 will give the lowest heating airflow

Table 19 – 110C21--20 Airflow in CFM

Setting	ESP (in.w.c.)									
	0.1	0.2	0.3	0.4	0.5	0.6	0.7	0.8	0.9	1
1*	650									
2	700									
3	740									
4	800									
5	875					†				
6	925									
7	975									
8	1000									
9	1050									
10	1138									
11	1200									
12	1225									
13‡	1300									
14	1400									
15	1480									
16	1600									
17	1625									
18**	1750									
19	1850									
20	1911									
21	2000									
22	2110								2065	2005
23	2179							2125	2065	2005
24	2200						2185	2125	2065	2005
Constant Fan Airflow (cfm)	Settings 1 - 14 (*650 - 1400)									
	Settings above 14 are not recommended									

	Heat Stage	
Setting	Low	High
Comfort 1	1010	1191
Comfort 2††	1134	1296
Efficiency 1	1315	1445
Efficiency 2	1377	1633

*. Constant fan default
†. Operation in this range is not recommended because high heat operation will exceed 1.0" w.c. ESP.
‡. Low cooling default
**. High cooling default
††. Heating default

For Heating Settings:

Eff1 airflow will give midpoint rise

Eff2 will increase heating airflow (when unit is capable)

Com2 will decrease heating airflow (default)

Com1 will give the lowest heating airflow

Table 20 – 135C24--22 Airflow in CFM

Setting	ESP (in.w.c.)									
	0.1	0.2	0.3	0.4	0.5	0.6	0.7	0.8	0.9	1
1*	550									
2	600									
3	650									
4	700									
5	740					†				
6	800									
7	875									
8	925									
9	975									
10	1000									
11	1050									
12	1138									
13	1200									
14	1225									
15	1300									
16‡	1400									
17	1480									
18	1600									
19	1625									
20	1750									
21	1850									
22**	1911									
23	2000									1950
24	2100							2070	2010	1950
25	2179							2070	2010	1950
Constant Fan Airflow (cfm)	Settings 1 - 3 (*550 - 650)									
	Settings above 3 are not recommended									

	Heat Stage	
Setting	Low	High
Comfort 1	1291	1511
Comfort 2††	1451	1651
Efficiency 1	1700	1815
Efficiency 2	1700	1815

*. Constant fan default
†. Operation in this range is not recommended because high heat operation will exceed 1.0" w.c. ESP.
‡. Low cooling default
**. High cooling default
††. Heating default

For Heating Settings:

- Eff1 airflow will give midpoint rise
- Eff2 will increase heating airflow (when unit is capable)
- Com2 will decrease heating airflow (default)
- Com1 will give the lowest heating airflow

FURNACE CONTROL PROGRAMMING AND NAVIGATION

On-Board Control Method

⚠ WARNING

ELECTRICAL SHOCK HAZARD

Failure to follow this warning could result in personal injury, or death.

Blower access door switch removes 115V power to control. No component operation can occur unless switch is closed. Caution must be taken when manually closing this switch for service purposes.

Do not tape or permanently allow the door switch to be bypassed. Temporarily depress the door switch with one hand while accessing the service buttons with your other hand. Do not touch uninsulated electrical components.

This furnace model is equipped with an on-board 3-digit LCD display with pushbutton navigation for the adjustment of operating parameters, diagnostics, and service. The control board must be powered to use the display and pushbuttons. Upon startup, the control will alternate displaying the Model Program Number (PrG) and Software Version (vEr). The control board has been programmed at the factory with a Model Program Number specific to the furnace product number. The correct Model Program Number is shown on the furnace rating plate.

The system's status is displayed after startup or after no control buttons have been pressed for 60 seconds. Status Code LED will also be illuminated or blinking when displaying the system status. The codes which indicate the current operating mode of the system as shown in Table 21.

Table 21 – System Status Display Codes

Display	Operating Mode	Notes
iDl	Idle/Standby Mode	No active demands
Ht2	High Heating Mode	Gas Heating active
Ht1	Low Heating Mode	Gas Heating active
CL2	High Cooling Mode	Cooling or Heat Pump active
CL1	Low Cooling Mode	Cooling or Heat Pump active
Hpd	Heat Pump Defrost Mode	Gas Heating cycle active during Heat Pump Defrost cycle
Cfn, CF2, CF3	Continuous Fan Mode	Continuous Fan active
BLR	Blower Operating Mode	System connected to a communiciating thermostat and running in cooling, heating, continuous fan or DHUM mode
##.#	Active Status Code	See Fig. 46 or Furnace Service Label for codes

Table 22 – Main Menu Options

Display	Menu Item	Use
idL, Ht,...	Current System Status	Displays the current furnace operating mode or active fault code.
FLt	Last 7 faults that occurred	Faults code menu stores the 7 latest faults in memory. If no faults, None (non) will be displayed. To clear fault history, scroll to Clear (CLr) and press MENU/SELECT. See Fig. 46 or Furnace Service Label for codes.
to	Temperature Display On/Off	Enable supply and return air temperature display on control.
Ht	Heating blower speed	Heating Airflow Setting. Adjust higher to lower Temp. Rise; lower to increase Temp. Rise. See Start-Up Procedures. See Fig. 45 for allowable selections and Table 13 - Table 20 for airflows.
CL2, CL1	Cooling and Heat Pump blower speed	Cooling Airflow Setting. See Fig. 45 for allowable selections and Table 13 - Table 20 for airflows. Refer to cooling or heat pump equipment data for required airflow settings.
CFn	Constant Fan blower speed	Constant Fan Airflow Setting. See Fig. 45 for allowable selections and Table 13 - Table 20 for airflows.
Hod	Heat Blower-OFF Delay	Value shown in seconds. Shorter delays may leave unused heat in ducts. Longer delays may blow cold air at the end of heating demands.
Cod	Cool Blower-OFF Delay	Value shown in seconds. Shorter delays may leave unused energy in furnace coil. Longer delays may re-evaporate condensate.
Htt	Heating thermostat type	Sets thermostat type.
Ctt	Cooling thermostat type	Sets thermostat type.
d ir	Direction	Adjusts display orientation 180 degrees between up flow (UPF) and down flow (dnF).
A ir	Air	CFM display ON/OFF
inF	Program # and Software	Do NOT program the control board with a Model Program Number different than what is specified on the rating plate. Alternates displaying the saved Model Program Number (PrG) and Software Version (uEr).
Ct	Component Test	Use to validate components are functioning as intended. See Component Self-Test instructions in the Start-Up Procedures section.
rSt	Reset	Reset settings to Factory Default by selecting Yes (YES).

The Main Menu provides access to operating parameters of the furnace control including airflows as well as other diagnostics. See Fig. 29 for the location of the pushbuttons. Scroll through Main Menu by pressing MENU/SELECT button. Press NEXT/OPTION to display the current setting of the parameter (value will flash). Additional presses will scroll through setting options. Press MENU/SELECT button to save a new setting and return to the Main Menu. The display will flash three times to confirm a new setting selection has been saved. Fig. 45 shows the flow of the menu and settings. Table 22 provides additional information on parameter adjustment and applicability.

NFC and Supported App Method

This furnace control board is also equipped with NFC (Near Field Communication) technology which allows the adjustment of operating parameters, diagnostics, and service via a field-supplied mobile device with NFC capability and supported mobile app. Remove 115V power from the furnace control board to use this method. See Fig. 29 for the location of the NFC antenna. Additional instructions and help may be available through the supported mobile app.

Scan the mobile app QR Code on page 1 of this manual for more information and a link to download the mobile app.

Control Board Replacement

If the control board must be replaced, the new board must be programmed with the correct Model Program Number before the furnace will operate. Do NOT program the control board with a Model Program Number different than what is specified on the rating plate. The control may be programmed by either of these approved methods:

1. Use the supported mobile app to flash the model program onto the board using Near Field Communication (NFC). Scan the QR code on page 1 of this manual for more information and a link to download the mobile app.
2. Use the correct Super Plug (available from distributor / replacement component) for the control board to copy the correct model program onto the new board.

Further details and instructions for these programming methods are provided with the replacement control board.

⚠ CAUTION

FURNACE OVERHEATING HAZARD

Failure to follow this caution could result in reduced furnace life.

Do NOT program the control board with a Model Program Number different than what is specified on the rating plate. Parameter options will not match design values.

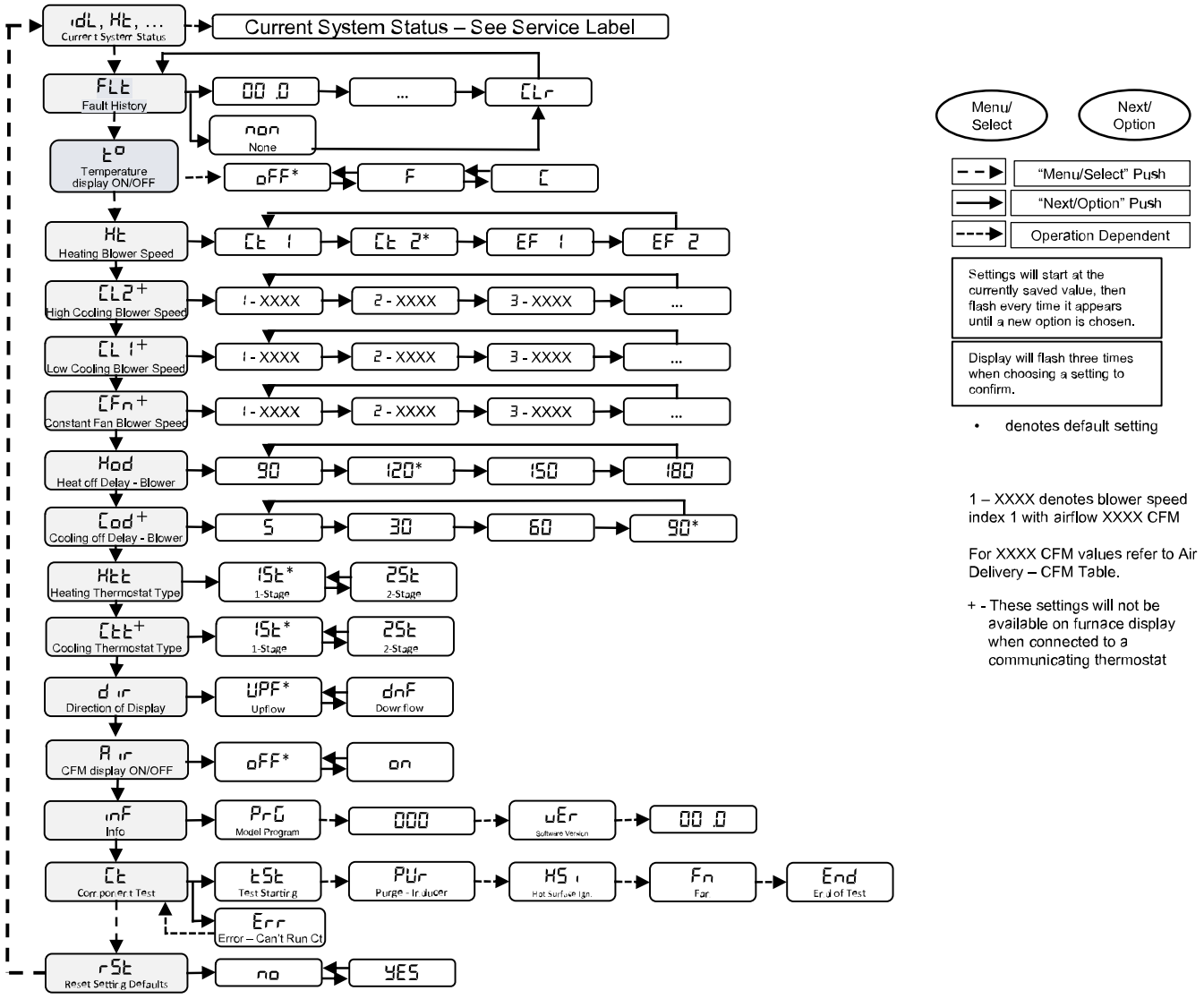

Fig. 45 – 3 Digit Display Flow Chart

SERVICE LABEL

STATUS CODE TABLE

Scan QR code or reference troubleshooting guide in installation manual.

The major status code is displayed in the first 2 digits of the display. The minor status code is displayed in the third digit. The major status code is also displayed on the LED indicator through the door with the first digit being the number of short flashes and the second digit being the number of long flashes.

Major	Minor	Description
10	1	L1 polarity fault
Rapid flash LED		
10	2	Dissipation System Active, operate blower
oER		Firmware install in process
bEL		Failed to load, retry firmware install
12	1	W on at power up
13 (3hr)	1	Limit Lockout
14 (3hr)	1	Ignition Lockout after 4 consecutive ignition tries
	2	Flame lost 3 times after 70s of heating
	3	Lockout - 7 loss of flame events during a heat request
15 (3hr)	1	Lockout - no Blower rpms detected
	2	Lockout-Failed to reach 500rpm after retry
17	1	BTM communication loss
21	1	24VAC sensed on gas valve when shouldn't be, power reset only
22	1	False flame
23	4	LPS stuck closed
	5	HPS stuck closed
24	1	Fuse fault

Major	Minor	Description
25	1	No program.
	2	Corrupted program file, reprogram control.
	4	Main program invalid, using backup program to operate.
	5	Installer settings corrupted.
	6	Wrong program, reprogram control.
		If program in furnace control is missing, not recognized, or corrupted. Reprogram control with correct program # as listed on the rating plate.Replace control if issue remains.
27	1	Program in super plug is missing, not recognized, or corrupted. Remove super plug then retry. If still have 27 code, try a different super plug. If still fails, replace control.
	2	
	3	
31	6	Open High pressure switch - HPS failed to close in 75s when high heat is required
	7	High Heat Only for remainder of current cycle
32	2	Open Low pressure switch (LPS)
33	1	Main Limit circuit open.

Major	Minor	Description
34	1	Ignition fault - four consecutive ignition trials.
	5	Low heat flame lost before blower on-delay
	6	Low heat flame lost after blower on-delay
	7	High heat flame lost before blower on-delay
	8	High heat flame lost after blower on-delay
41	1	No blower RPM at start up
	2	No RPM when blower motor is running
	3	Failed to reach 500rpm at startup
43	1	HPS closed before LPS
45	1	Internal control error (1hr)
	2	GVR relay not closing
	3	Micro EEPROM error (1hr)
	4	Micro loss of Comm
		For code 45, cycle power, if code 45 repeats, replace control.
51	1	OAT - Open
	2	OAT - Short
52	1	SAT - Open
	2	SAT - Short
53	1	RAT - Open
	2	RAT - Short

MENU NAVIGATION

Scroll through main menu by pressing the MENU/SELECT button. Press NEXT/OPTION button to view current setting (will flash on display) and to scroll through setting options. Press MENU/SELECT button to save new setting and return to main menu. The display will flash to confirm setting selection beforereturning to the main menu.

SYSTEM STATUS

DISPLAY	DESCRIPTION
idL	Idle / Standby Mode
Ht2	High Heating Mode
Ht 1	Low Heating Mode
CL2	High Cooling Mode
CL 1	Low Cooling Mode
HPd	Heat Pump Defrost Mode
CFn , CF2 , CF3	Continuous Fan Mode
##.#	Active Status Code

COMPONENT TEST

To initiate the component test sequence, the control must be in (idL) mode. No thermostat demands (W, Y, G). Select component test (Ct) from menu select buttons to start the component test sequence.Once initiated the furnace control will perform the following sequence:

Err during a step means issue detected

1. PUr- Inducer ON High
2. HS 1- After waiting 10s, HSI ON for 15s.
3. Fn- After HSI, then Blower ON for 15s.
4. End- After Blower, Inducer ON Low for 10s. The test ends.

MAIN MENU

DISPLAY	DESCRIPTION
idL,Ht,...	Current System Status
FLt	Last 7 faults that occured
t°	Temperature Display ON/OFF
Ht	Heating Blower speed
CL2 , CL 1	Cooling & Heat Pump Blwr speed
CFn	Continuous Fan speed
Hod	Heat OFF delay
Cod	Cool OFF delay
Htt	Heating thermostat type
Ctt	Cooling thermostat type
d ir	Orientation upflow or downflow
A ir	CFM display ON/OFF
inF	Program # and Software version
Ct	Component test
rSt	Reset All Installer Settings to Factory Defaults

All copyrighted materials used herein are the property of their respective owners.

SERVICE LABEL

349421-201 REV.B

A230364A

Fig. 46 – Service Label

START-UP, ADJUSTMENT, AND SAFETY CHECK

GENERAL

⚠ WARNING

FIRE HAZARD

Failure to follow this warning could result in personal injury, death or property damage.

This furnace is equipped with manual reset limit switches in the gas control area. The switches open and shut off power to the gas valve, if a flame rollout or overheating condition occurs in the gas control area. DO NOT bypass the switches. Correct problem before resetting the switches.

Maintain 115-V wiring and ground. Improper polarity will result in rapid flashing control diagnostic light and status code (10 . 1) is displayed. The furnace will NOT operate.

1. Make thermostat wire connections at the 24-V terminal block on the furnace control. Failure to make proper connections will result in improper operation, see Fig. 25 - Fig. 29.
2. Gas supply pressure to the furnace must be greater than 4.5-in. w.c. (0.16 psig) but not exceed 14-in. w.c. (0.5 psig).
3. Check all manual-reset switches for continuity.
4. Replace blower compartment door. Door must be in place to operate furnace.

⚠ CAUTION

CUT HAZARD

Failure to follow this caution may result in personal injury.

Sheet metal parts may have sharp edges or burrs. Use care and wear appropriate protective clothing, safety glasses and gloves when handling parts, and servicing furnaces.

Start-Up Procedures

⚠ WARNING

FIRE OR EXPLOSION HAZARD

Failure to follow this warning could result in personal injury, death, and/or property damage.

Never purge a gas line into a combustion chamber. Never test for gas leaks with an open flame. Use a commercially available soap solution made specifically for the detection of leaks to check all connections. A fire or explosion may result causing property damage, personal injury or loss of life.

1. Purge gas lines after all connections have been made.
2. Check gas lines for leaks.

⚠ WARNING

ELECTRICAL SHOCK HAZARD

Failure to follow this warning could result in personal injury, or death.

Blower access door switch opens 115-V power to control. No component operation can occur unless switch is closed. Caution must be taken when manually closing this switch for service purposes.

3. To Begin Component Self-Test:
   a. Remove thermostat wire connected to R terminal on control to ensure no thermostat demands are present.
   b. Temporarily depress blower door switch to power the control board.

⚠ CAUTION

SHOCK HAZARD

Failure to follow this caution could result in personal injury.

Do not tape or permanently allow the door switch to be bypassed. Temporarily depress the door switch with one hand while accessing the service buttons with your other hand. Do not touch uninsulated electrical components.

   c. To initiate the component test sequence, the control must be in (Idl) mode. no thermostat demands (W, Y, G). Select component test (Ct) from menu select buttons to start the component test sequence. Once initiated the furnace control will perform the test sequence as shown in Table 23. Once complete, connect thermostat wire to R terminal on control board and re-install blower door.
4. Operate furnace per instruction on door.
5. Verify furnace shut down by lowering thermostat setting below room temperature.
6. Verify furnace restarts by raising thermostat setting above room temperature.

Table 23 – Test Sequence

Display	Operating Mode	Function
tSt	Test	Confirms start of Component Test mode.
Pur	Purge	Inducer ON High for 10 seconds before next stage. Inducer remains ON for test duration.
HS 1	Hot Surface Igniter	Hot Surface Igniter ON for 15 seconds, then OFF.
Fn	Fan	Blower ON at 50% torque for 10 seconds, then OFF.
End	End Test	All component OFF except for Inducer ON Low for 10 seconds. Display returns to Idl. If a thermostat input is detected or fault condition activates during the test sequence, control will abort and display End for 6 seconds.
Err	Error	Displayed if component test is not able start. Check for thermostat inputs or faults, and system status is Idle (Idl).

WIRING DIAGRAM

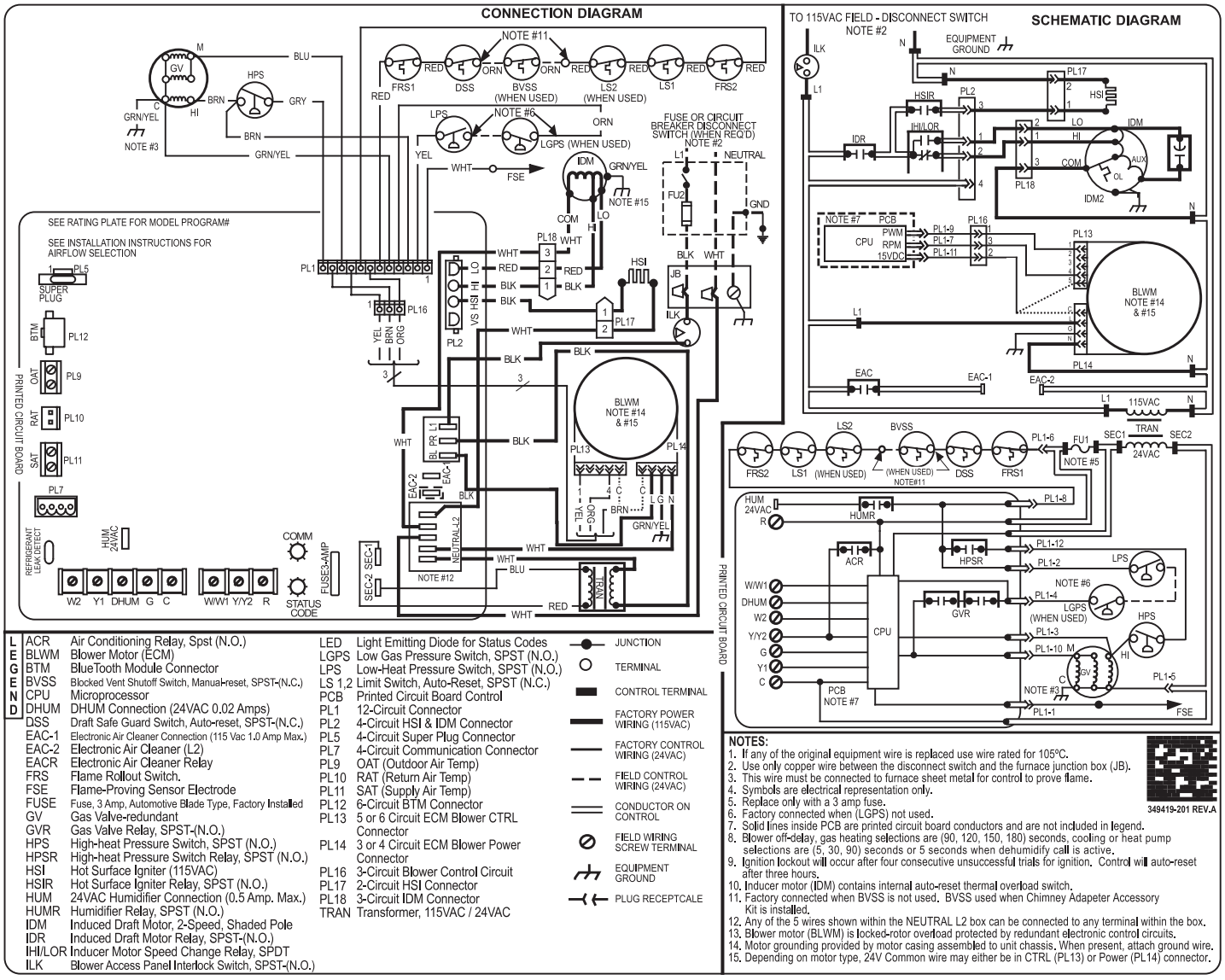

Fig. 47 – Wiring Diagram

Adjustments

Furnace gas input rate on rating plate is for installations at altitudes up to 2000 Ft. (610 M). Furnace input rate must be within +/-2 percent of furnace rating plate input. For altitudes above 5500 Ft. (1676 M), a field-supplied high altitude pressure switch is required. Perform the following steps:

⚠ WARNING

FIRE HAZARD

Failure to follow this warning could result in personal injury, death and/or property damage.

DO NOT bottom out gas valve regulator adjusting screw. This can result in unregulated manifold pressure and result in excess overfire and heat exchanger failures.

1. Determine the correct gas input rate.
   The input rating for altitudes above 2,000 ft. (610 M) must be reduced by 4 percent for each 1,000 ft. (305 M) above sea level. For installations below 2000 Ft. (610 M), refer to the unit rating plate. For installations above 2000 Ft. (610 M), multiply the input on the rating plate by the de-rate multiplier in Table 24 for the correct input rate.

⚠ CAUTION

FURNACE DAMAGE HAZARD

Failure to follow this caution may result in reduced furnace life.

DO NOT redrill orifices. Improper drilling (burrs, out-of-round holes, etc.) can cause excessive burner noise and misdirection of burner flames. This can result in flame impingement of heat exchangers, causing failures, see Fig. 48.

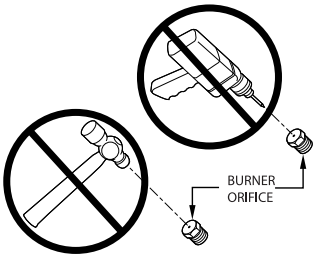

A93059

Fig. 48 – Orifice Hole

Table 24 – Altitude Derate Multiplier for U.S.A.

ALTITUDE FT. (M)	PERCENT OF DERATE	DERATE MULTIPLIER FACTOR*
0–2000 (0-610)	0	1.00
2001–3000 (610-914)	8–12	0.90
3001–4000 (914-1219)	12–16	0.86
4001–5000 (1219-1524)	16–20	0.82
5001–6000 (1524-1829)	20–24	0.78
6001–7000 (1829-2134)	24–28	0.74
7001–8000 (2134-2438)	28–32	0.70
8001–9000 (2438-2743)	32–36	0.66
9001–10,000 (2743-3048)	36–40	0.62

2. Determine the correct orifice and manifold pressure adjustment. All models in all positions except Low NOx models in downflow and horizontal positions use Table 26 (22,000 BTUh per burner.) Low NOx models in downflow or horizontal positions must use Table 27 (21,000 BTUh per burner.) See input listed on rating plate.
   a. Obtain average yearly gas heat value (at installed altitude) from local gas supplier.
   b. Obtain average yearly gas specific gravity from local gas supplier.
   c. Find installation altitude in Table 26 or Table 27.
   d. Find closest natural gas heat value and specific gravity in Table 26 or Table 27.
   e. Follow heat value and specific gravity lines to point of intersection to find orifice size and low-and high-heat manifold pressure settings for proper operation.
   f. Check and verify burner orifice size in furnace. NEVER ASSUME ORIFICE SIZE. ALWAYS CHECK AND VERIFY.

NOTE: If orifice hole appears damaged or it is suspected to have been redrilled, check orifice hole with a numbered drill bit of correct size. Never redrill an orifice. A burr-free and squarely aligned orifice hole is essential for proper flame characteristics.

   g. Replace orifice with correct size, if required by Table 26 or Table 27. Use only factory-supplied orifices. See Example below.

EXAMPLE: 0–2000 ft. (0-610 M) altitude

For 22,000 BTUh per burner application use Table 26.

Heating value = 1000 BTUh/cu ft.

Specific gravity = 0.62

Therefore: Orifice No. 43*

Manifold pressure: 3.7-in. w.c. for high-heat

1.6-in. w.c. for low-heat

* Furnace is shipped with No. 43 orifices. In this example all main burner orifices are the correct size and do not need to be changed to obtain proper input rate.

3. Adjust manifold pressure to obtain low fire input rate, see Fig. 22.
   a. Turn gas valve ON/OFF switch to OFF.
   b. Remove manifold pressure tap plug from gas valve.
   c. Connect a water column manometer or similar device to manifold pressure tap.
   d. Turn gas valve ON/OFF switch to ON.
   e. On the 3 digit display, navigate to (HtE) and select (25E) to lock furnace in low-heat operation see Fig. 29.
   f. Manually close blower door switch.
   g. Jumper R and W/W1 thermostat connections on control to start furnace, see Fig. 29.
   h. Remove regulator adjustment cap from low heat gas valve pressure regulator (see Fig. 22) and turn low-heat adjusting screw (3/16 or smaller flat-tipped screwdriver) counterclockwise (out) to decrease input rate or clockwise (in) to increase input rate.

NOTE: DO NOT set low-heat manifold pressure less than 1.4-in. w.c. or more than 1.7-in. w.c. for natural gas. If manifold pressure is outside this range, change main burner orifices.

   i. Install low-heat regulator adjustment cap.
   j. Leave manometer or similar device connected and proceed to Step 4.

4. Adjust manifold pressure to obtain high fire input rate, see Fig. 22.
   a. Jumper R to W/W1 and W2 thermostat connections on furnace control. This keeps furnace locked in high-heat operation.
   b. Remove regulator adjustment cap from high-heat gas valve pressure regulator, see Fig. 22, and turn high heat adjusting screw (3/16-in. or smaller flat-tipped screwdriver) counterclockwise (out) to decrease input rate or clockwise (in) to increase input rate.

NOTE: DO NOT set high-heat manifold pressure less than 3.2-in. w.c. or more than 3.8 in. w.c. for natural gas. If manifold pressure is outside this range, change main burner orifices to obtain manifold pressure in this range.

   c. When correct input is obtained, replace caps that conceal gas valve regulator adjustment screws. Main burner flame should be clear blue, almost transparent.
   d. Remove jumpers R to W/W1 and R to W2.

5. Verify natural gas input rate by clocking meter.

NOTE: Gas valve regulator adjustment caps must be in place for proper input to be clocked.

   a. Turn off all other gas appliances and pilots served by the meter.
   b. On the 3 digit display, navigate to (HtE) and select (25E). This keeps furnace locked in low-heat operation. Jumper R to W/W1.
   c. Run furnace for 3 minutes in low-heat operation.
   d. Measure time (in sec) for gas meter to complete 1 revolution and note reading. The 2 or 5 cubic feet dial provides a more accurate measurement of gas flow.
   e. Refer to Table 25 for cubic ft. of gas per hr.
   f. Multiply gas rate cu ft./hr by heating value (BTUh/cu ft.) to obtain input. If clocked rate does not match required input from Step 1, increase manifold pressure to increase input or decrease manifold pressure to decrease input. Repeat steps b through e until correct low-heat input is achieved. Re-install low heat regulator seal cap on gas valve.
   g. Jumper R to W/W1, and W2. This keeps furnace locked in high-heat operation. Repeat items d through g for high-heat operation.
   h. Remove jumpers R to W/W1 and R to W2.

⚠ CAUTION

FURNACE DAMAGE HAZARD

Failure to follow this caution may result in shorten furnace life.

Set air temperature rise within limits specified on the rating plate to prevent reduced life of furnace components.

⚠ CAUTION

UNIT DAMAGE HAZARD

Failure to follow this caution may result in overheating the heat exchangers or condensing flue gases in heat exchanger areas not designed for condensate.

Temperature rise must be within limits specified on unit rating plate.

Table 25 – Gas Rate (CU ft./hr.)

SEC. FOR 1 REV.	SIZE OF TEST DIAL			SEC. FOR 1 REV.	SIZE OF TEST DIAL		
	1 Cu Ft.	2 Cu Ft.	5 Cu Ft.		1 Cu Ft.	2 Cu Ft.	5 Cu Ft.
10	360	720	1800	50	72	144	360
11	327	655	1636	51	71	141	355
12	300	600	1500	52	69	138	346
13	277	555	1385	53	68	136	340
14	257	514	1286	54	67	133	333
15	240	480	1200	55	65	131	327
16	225	450	1125	56	64	129	321
17	212	424	1059	57	63	126	316
18	200	400	1000	58	62	124	310
19	189	379	947	59	61	122	305
20	180	360	900	60	60	120	300
21	171	343	857	62	58	116	290
22	164	327	818	64	56	112	281
23	157	313	783	66	54	109	273
24	150	300	750	68	53	106	265
25	144	288	720	70	51	103	257
26	138	277	692	72	50	100	250
27	133	267	667	74	48	97	243
28	129	257	643	76	47	95	237
29	124	248	621	78	46	92	231

Table 25 – Gas Rate (CU ft./hr.) (Continued)

SEC. FOR 1 REV.	SIZE OF TEST DIAL			SEC. FOR 1 REV.	SIZE OF TEST DIAL		
	1 Cu Ft.	2 Cu Ft.	5 Cu Ft.		1 Cu Ft.	2 Cu Ft.	5 Cu Ft.
30	120	240	600	80	45	90	225
31	116	232	581	82	44	88	220
32	113	225	563	84	43	86	214
33	109	218	545	86	42	84	209
34	106	212	529	88	41	82	205
35	103	206	514	90	40	80	200
36	100	200	500	92	39	78	196
37	97	195	486	94	38	76	192
38	95	189	474	96	38	75	188
39	92	185	462	98	37	74	184
40	90	180	450	100	36	72	180
41	88	176	439	102	35	71	178
42	86	172	429	104	35	69	173
43	84	167	419	106	34	68	170
44	82	164	409	108	33	67	167
45	80	160	400	110	33	65	164
46	78	157	391	112	32	64	161
47	76	153	383	116	31	62	155
48	75	150	375	120	30	60	150
49	73	147	367				

Table 26 – Orifice Size and Manifold Pressure (in. w.c.) for Gas Input Rate

(Tabulated Data Based on 22,000 BTUh High-Heat/14,500 BTUh for Low-Heat per Burner, Derated 4 Percent for Each 1000 Ft. (305 M) Above Sea Level)

ALTITUDE RANGE FT. (M)		AVG. GAS HEAT VALUE (BTUH/CU FT.)	SPECIFIC GRAVITY OF NATURAL GAS							
			0.58		0.60		0.62		0.64	
			Orifice No.	Manifold Pressure High/Low	Orifice No.	Manifold Pressure High/Low	Orifice No.	Manifold Pressure High/Low	Orifice No.	Manifold Pressure High/Low
USA	0 to 2000 (0 to 610)	900	42	3.5/1.5	42	3.6/1.6	42	3.7/1.6	41	3.5/1.5
		925	42	3.3/1.4	42	3.4/1.5	42	3.5/1.5	42	3.7/1.6
		950	43	3.8/1.7	42	3.3/1.4	42	3.4/1.5	42	3.5/1.5
		975	43	3.6/1.6	43	3.8/1.6	42	3.2/1.4	42	3.3/1.4
		1000	43	3.5/1.5	43	3.6/1.6	43	3.7/1.6	43	3.8/1.7
		1025	43	3.3/1.4	43	3.4/1.5	43	3.5/1.5	43	3.6/1.6
		1050	44	3.6/1.6	43	3.2/1.4	43	3.4/1.5	43	3.5/1.5
		1075	44	3.4/1.5	44	3.5/1.5	43	3.2/1.4	43	3.3/1.4
		1100	44	3.3/1.4	44	3.4/1.5	44	3.5/1.5	43	3.2/1.4
USA	2001 to 3000 (610 to 914)	800	42	3.4/1.5	42	3.5/1.5	42	3.6/1.6	42	3.7/1.6
		825	42	3.2/1.4	42	3.3/1.4	42	3.4/1.5	42	3.5/1.5
		850	43	3.7/1.6	43	3.8/1.6	42	3.2/1.4	42	3.3/1.4
		875	43	3.5/1.5	43	3.6/1.6	43	3.7/1.6	43	3.8/1.7
		900	43	3.3/1.4	43	3.4/1.5	43	3.5/1.5	43	3.6/1.6
		925	44	3.5/1.5	43	3.2/1.4	43	3.3/1.4	43	3.4/1.5
		950	44	3.4/1.5	44	3.5/1.5	44	3.6/1.6	43	3.2/1.4
		975	44	3.2/1.4	44	3.3/1.4	44	3.4/1.5	44	3.5/1.5
		1000	45	3.7/1.6	45	3.8/1.7	44	3.2/1.4	44	3.4/1.5
USA	3001 to 4000 (914 to 1219)	775	42	3.2/1.4	42	3.3/1.4	42	3.4/1.5	42	3.5/1.5
		800	43	3.6/1.6	43	3.8/1.6	42	3.2/1.4	42	3.3/1.4
		825	43	3.4/1.5	43	3.5/1.5	43	3.7/1.6	43	3.8/1.6
		850	43	3.2/1.4	43	3.3/1.4	43	3.4/1.5	43	3.6/1.5
		875	44	3.5/1.5	44	3.6/1.6	43	3.3/1.4	43	3.4/1.5
		900	44	3.3/1.4	44	3.4/1.5	44	3.5/1.5	43	3.2/1.4
		925	45	3.8/1.6	44	3.2/1.4	44	3.3/1.5	44	3.4/1.5
		950	46	3.8/1.6	45	3.7/1.6	45	3.8/1.7	44	3.3/1.4

Table 26 – Orifice Size and Manifold Pressure (in. w.c.) for Gas Input Rate (Continued)

(Tabulated Data Based on 22,000 BTUh High-Heat/14,500 BTUh for Low-Heat per Burner, Derated 4 Percent for Each 1000 Ft. (305 M) Above Sea Level) (Continued)

ALTITUDE RANGE FT. (M)		AVG. GAS HEAT VALUE (BTUH/CU FT.)	SPECIFIC GRAVITY OF NATURAL GAS							
			0.58		0.60		0.62		0.64	
			Orifice No.	Manifold Pressure High/Low	Orifice No.	Manifold Pressure High/Low	Orifice No.	Manifold Pressure High/Low	Orifice No.	Manifold Pressure High/Low
USA	4001 to 5000 (1219 to 1524)	750	43	3.6/1.6	43	3.8/1.6	42	3.2/1.4	42	3.3/1.4
		775	43	3.4/1.5	43	3.5/1.5	43	3.6/1.6	43	3.8/1.6
		800	43	3.2/1.4	43	3.3/1.4	43	3.4/1.5	43	3.5/1.5
		825	44	3.4/1.5	44	3.6/1.5	43	3.2/1.4	43	3.3/1.4
		850	44	3.2/1.4	44	3.4/1.5	44	3.5/1.5	44	3.6/1.6
		875	45	3.7/1.6	45	3.8/1.7	44	3.3/1.4	44	3.4/1.5
		900	46	3.7/1.6	46	3.8/1.7	45	3.7/1.6	44	3.2/1.4
		925	46	3.5/1.5	46	3.6/1.6	46	3.7/1.6	46	3.8/1.7
USA	5001 to 6000 (1524 to 1829)	725	43	3.4/1.5	43	3.5/1.5	43	3.6/1.6	43	3.7/1.6
		750	43	3.2/1.4	43	3.3/1.4	43	3.4/1.5	43	3.5/1.5
		775	44	3.4/1.5	44	3.5/1.5	43	3.2/1.4	43	3.3/1.4
		800	44	3.2/1.4	44	3.3/1.4	44	3.4/1.5	44	3.5/1.5
		825	46	3.8/1.7	45	3.8/1.6	44	3.2/1.4	44	3.3/1.4
		850	46	3.6/1.6	46	3.7/1.6	46	3.8/1.7	45	3.8/1.6
		875	47	3.8/1.7	46	3.5/1.5	46	3.6/1.6	46	3.7/1.6
		900	47	3.6/1.6	47	3.8/1.6	46	3.4/1.5	46	3.5/1.5
USA	6001 to 7000 (1829 to 2134)	675	43	3.4/1.5	43	3.5/1.5	43	3.6/1.6	43	3.7/1.6
		700	44	3.6/1.6	43	3.3/1.4	43	3.4/1.5	43	3.5/1.5
		725	44	3.4/1.5	44	3.5/1.5	44	3.6/1.6	43	3.2/1.4
		750	45	3.8/1.7	44	3.3/1.4	44	3.4/1.5	44	3.5/1.5
		775	46	3.7/1.6	45	3.7/1.6	45	3.8/1.7	44	3.2/1.4
		800	46	3.5/1.5	46	3.6/1.6	46	3.8/1.6	45	3.7/1.6
		825	47	3.7/1.6	46	3.4/1.5	46	3.5/1.5	46	3.6/1.6
		850	47	3.5/1.5	47	3.6/1.6	47	3.8/1.6	46	3.4/1.5
USA	7001 to 8000 (2134 to 2438)	650	44	3.6/1.6	43	3.2/1.4	43	3.4/1.5	43	3.5/1.5
		675	44	3.3/1.5	44	3.5/1.5	44	3.6/1.6	43	3.2/1.4
		700	45	3.8/1.6	44	3.2/1.4	44	3.3/1.4	44	3.4/1.5
		725	46	3.7/1.6	46	3.8/1.7	45	3.7/1.6	44	3.2/1.4
		750	46	3.4/1.5	46	3.6/1.5	46	3.7/1.6	46	3.8/1.6
		775	47	3.6/1.6	47	3.8/1.6	46	3.4/1.5	46	3.6/1.5
		800	47	3.4/1.5	47	3.5/1.5	47	3.7/1.6	47	3.8/1.6
		825	48	3.7/1.6	48	3.8/1.6	47	3.4/1.5	47	3.6/1.5
USA	8001 to 9000 (2438 to 2743)	625	44	3.3/1.5	44	3.5/1.5	44	3.6/1.6	43	3.2/1.4
		650	45	3.7/1.6	44	3.2/1.4	44	3.3/1.4	44	3.4/1.5
		675	46	3.6/1.6	46	3.8/1.6	45	3.7/1.6	45	3.8/1.7
		700	47	3.8/1.7	46	3.5/1.5	46	3.6/1.6	46	3.7/1.6
		725	47	3.6/1.6	47	3.7/1.6	47	3.8/1.7	46	3.5/1.5
		750	48	3.8/1.7	47	3.5/1.5	47	3.6/1.6	47	3.7/1.6
		775	48	3.6/1.5	48	3.7/1.6	48	3.8/1.7	47	3.5/1.5
USA	9001 to 10,000 2743 to 3048)	600	45	3.7/1.6	45	3.8/1.7	44	3.3/1.4	44	3.4/1.5
		625	46	3.6/1.6	46	3.7/1.6	46	3.8/1.7	45	3.8/1.6
		650	47	3.8/1.6	46	3.4/1.5	46	3.6/1.5	46	3.7/1.6
		675	47	3.5/1.5	47	3.6/1.6	47	3.7/1.6	46	3.4/1.5
		700	48	3.7/1.6	48	3.8/1.7	47	3.5/1.5	47	3.6/1.6
		725	48	3.5/1.5	48	3.6/1.6	48	3.7/1.6	48	3.8/1.7

* Orifice numbers 43 are factory installed

Table 27 – Orifice Size and Manifold Pressure (in. w.c.) for Gas Input Rate

(Tabulated Data Based on 21,000 BTUh High-Heat/14,500 BTUh for Low-Heat Per Burner, Derated 4 Percent for Each 1000 Ft. (305 M) Above Sea level)

ALTITUDE RANGE FT. (M)		AVG. GAS HEAT VALUE (BTUH/CU FT.)	SPECIFIC GRAVITY OF NATURAL GAS							
			0.58		0.60		0.62		0.64	
			Orifice No.	Manifold Pressure High/Low	Orifice No.	Manifold Pressure High/Low	Orifice No.	Manifold Pressure High/Low	Orifice No.	Manifold Pressure High/Low
USA	0 to 2000 (0 to 610)	900	42	3.2/1.5	42	3.3/1.6	42	3.4/1.6	42	3.5/1.7
		925	43	3.7/1.8	43	3.8/1.8	42	3.2/1.5	42	3.3/1.6
		950	43	3.5/1.7	43	3.6/1.7	43	3.7/1.8	43	3.8/1.8
		975	43	3.3/1.6	43	3.4/1.6	43	3.5/1.7	43	3.7/1.7
		1000	44	3.6/1.7	43	3.3/1.6	43	3.4/1.6	43	3.5/1.7
		1025	44	3.4/1.6	44	3.6/1.7	43	3.2/1.5	43	3.3/1.6
		1050	44	3.3/1.6	44	3.4/1.6	44	3.5/1.7	43	3.2/1.5
		1075	45	3.8/1.8	44	3.2/1.5	44	3.3/1.6	44	3.4/1.6
		1100	46	3.8/1.8	45	3.7/1.8	44	3.2/1.5	44	3.3/1.6
USA	2001 to 3000 (610 to 914)	800	43	3.8/1.8	42	3.2/1.5	42	3.3/1.6	42	3.4/1.6
		825	43	3.5/1.7	43	3.7/1.7	43	3.8/1.8	42	3.2/1.5
		850	43	3.3/1.6	43	3.5/1.6	43	3.6/1.7	43	3.7/1.8
		875	43	3.2/1.5	43	3.3/1.6	43	3.4/1.6	43	3.5/1.7
		900	44	3.4/1.6	44	3.5/1.7	43	3.2/1.5	43	3.3/1.6
		925	44	3.2/1.5	44	3.3/1.6	44	3.5/1.6	44	3.6/1.7
		950	45	3.7/1.8	45	3.8/1.8	44	3.3/1.6	44	3.4/1.6
		975	46	3.7/1.8	46	3.8/1.8	45	3.8/1.8	44	3.2/1.5
		1000	46	3.5/1.7	46	3.6/1.7	46	3.8/1.8	45	3.7/1.8
USA	3001 to 4000 (914 to 1219)	775	43	3.5/1.7	43	3.7/1.7	43	3.8/1.8	42	3.2/1.5
		800	43	3.3/1.6	43	3.4/1.6	43	3.5/1.7	43	3.7/1.7
		825	44	3.6/1.7	43	3.2/1.5	43	3.3/1.6	43	3.4/1.6
		850	44	3.4/1.6	44	3.5/1.7	44	3.6/1.7	43	3.2/1.5
		875	45	3.8/1.8	44	3.3/1.6	44	3.4/1.6	44	3.5/1.7
		900	46	3.8/1.8	45	3.8/1.8	44	3.2/1.5	44	3.3/1.6
		925	46	3.6/1.7	46	3.7/1.8	45	3.7/1.8	45	3.8/1.8
		950	46	3.4/1.6	46	3.5/1.7	46	3.7/1.7	46	3.8/1.8
USA	4001 to 5000 (1219 to 1524)	750	43	3.3/1.6	43	3.4/1.6	43	3.5/1.7	43	3.6/1.7
		775	44	3.6/1.7	43	3.2/1.5	43	3.3/1.6	43	3.4/1.6
		800	44	3.3/1.6	44	3.4/1.6	44	3.6/1.7	43	3.2/1.5
		825	45	3.8/1.8	44	3.2/1.5	44	3.4/1.6	44	3.5/1.6
		850	46	3.8/1.8	45	3.7/1.8	45	3.8/1.8	44	3.3/1.6
		875	46	3.5/1.7	46	3.7/1.7	46	3.8/1.8	45	3.7/1.8
		900	47	3.8/1.8	46	3.5/1.7	46	3.6/1.7	46	3.7/1.8
		925	47	3.6/1.7	47	3.7/1.8	47	3.8/1.8	46	3.5/1.7
USA	5001 to 6000 (1524 to 1829)	725	44	3.5/1.7	43	3.2/1.5	43	3.3/1.6	43	3.4/1.6
		750	44	3.3/1.6	44	3.4/1.6	44	3.5/1.7	43	3.2/1.5
		775	45	3.7/1.8	44	3.2/1.5	44	3.3/1.6	44	3.4/1.6
		800	46	3.7/1.8	46	3.8/1.8	45	3.8/1.8	44	3.2/1.5
		825	46	3.5/1.7	46	3.6/1.7	46	3.7/1.8	46	3.8/1.8
		850	47	3.7/1.8	47	3.8/1.8	46	3.5/1.7	46	3.6/1.7
		875	47	3.5/1.7	47	3.6/1.7	47	3.7/1.8	46	3.4/1.6
		900	48	3.8/1.8	47	3.4/1.6	47	3.5/1.7	47	3.7/1.7
USA	6001 to 7000 (1829 to 2134)	675	44	3.5/1.7	43	3.2/1.5	43	3.3/1.6	43	3.4/1.6
		700	44	3.3/1.6	44	3.4/1.6	44	3.5/1.7	43	3.2/1.5
		725	45	3.7/1.8	45	3.8/1.8	44	3.3/1.6	44	3.4/1.6
		750	46	3.6/1.7	46	3.8/1.8	45	3.7/1.8	45	3.8/1.8
		775	46	3.4/1.6	46	3.5/1.7	46	3.6/1.7	46	3.8/1.8
		800	47	3.6/1.7	47	3.8/1.8	46	3.4/1.6	46	3.5/1.7
		825	47	3.4/1.6	47	3.5/1.7	47	3.6/1.7	47	3.8/1.8
		850	48	3.7/1.7	48	3.8/1.8	47	3.4/1.6	47	3.5/1.7
USA	7001 to 8000 (2134 to 2438)	650	44	3.3/1.6	44	3.4/1.6	44	3.5/1.7	43	3.2/1.5
		675	45	3.7/1.8	45	3.8/1.8	44	3.3/1.6	44	3.4/1.6
		700	46	3.6/1.7	46	3.7/1.8	46	3.8/1.8	45	3.8/1.8
		725	47	3.8/1.8	46	3.5/1.7	46	3.6/1.7	46	3.7/1.8
		750	47	3.5/1.7	47	3.7/1.8	47	3.8/1.8	46	3.5/1.6
		775	48	3.8/1.8	47	3.4/1.6	47	3.6/1.7	47	3.7/1.7
		800	48	3.6/1.7	48	3.7/1.8	48	3.8/1.8	47	3.4/1.6
		825	48	3.3/1.6	48	3.5/1.6	48	3.6/1.7	48	3.7/1.8

Table 27 – Orifice Size and Manifold Pressure (in. w.c.) for Gas Input Rate (Continued)

(Tabulated Data Based on 21,000 BTUh High-Heat/14,500 BTUh for Low-Heat Per Burner, Derated 4 Percent for Each 1000 Ft. (305 M) Above Sea level) (Continued)

ALTITUDE RANGE FT. (M)		AVG. GAS HEAT VALUE (BTUH/CU FT.)	SPECIFIC GRAVITY OF NATURAL GAS							
			0.58		0.60		0.62		0.64	
			Orifice No.	Manifold Pressure High/Low	Orifice No.	Manifold Pressure High/Low	Orifice No.	Manifold Pressure High/Low	Orifice No.	Manifold Pressure High/Low
USA	8001 to 9000 (2438 to 2743)	625	45	3.7/1.8	45	3.8/1.8	44	3.3/1.6	44	3.4/1.6
		650	46	3.6/1.7	46	3.7/1.8	46	3.8/1.8	45	3.8/1.8
		675	47	3.8/1.8	46	3.4/1.6	46	3.5/1.7	46	3.7/1.7
		700	47	3.5/1.7	47	3.6/1.7	47	3.7/1.8	46	3.4/1.6
		725	48	3.7/1.8	48	3.8/1.8	47	3.5/1.7	47	3.6/1.7
		750	48	3.5/1.7	48	3.6/1.7	48	3.7/1.8	48	3.8/1.8
		775	49	3.8/1.8	48	3.4/1.6	48	3.5/1.7	48	3.6/1.7
USA	9001 to 10,000 (2743 to 3048)	600	46	3.6/1.7	46	3.7/1.8	46	3.8/1.8	45	3.7/1.8
		625	47	3.7/1.8	47	3.8/1.8	46	3.5/1.7	46	3.6/1.7
		650	47	3.4/1.6	47	3.6/1.7	47	3.7/1.8	47	3.8/1.8
		675	48	3.6/1.7	48	3.8/1.8	47	3.4/1.6	47	3.5/1.7
		700	48	3.4/1.6	48	3.5/1.7	48	3.6/1.7	48	3.7/1.8
		725	49	3.7/1.8	49	3.8/1.8	48	3.4/1.6	48	3.5/1.7

* Orifice numbers 43 are factory installed

Adjust Temperature Rise

The furnace must operate within the temperature rise ranges specified on the furnace rating plate. Do not exceed temperature rise range specified on unit rating plate. Determine the temperature rise as follows:

⚠ CAUTION

FURNACE DAMAGE HAZARD

Failure to follow this caution may result in:

- Overheating the heat exchangers or condensing flue gases in heat exchanger areas not designed for condensate.
- Shortened furnace life
- Component damage.

Temperature rise must be within limits specified on furnace rating plate. Recommended operation is at midpoint of rise range or slightly above.

NOTE: Blower access door must be installed when taking temperature rise reading. Leaving blower access door off will result in incorrect temperature measurements, due to possible changes in duct static pressure and airflow.

1. Place thermometers in return and supply ducts as close to furnace as possible. Be sure thermometers do not see radiant heat from heat exchangers. Radiant heat affects temperature rise readings. This practice is particularly important with straight-run ducts.
2. When thermometer readings stabilize, subtract return-air temperature from supply-air temperature to determine air temperature rise.

NOTE: The temperatures read by the RAT and SAT sensors connected to the control board can be displayed during heating and cooling operation by enabling this feature in the (tD) menu item. See Fig. 45. Select F for Fahrenheit or C for Celsius. When enabled, the display will cycle through the current operating mode, SAT, RAT, and temperature differential. If displayed SAT value does not agree with measured values, relocate SAT sensor farther away from furnace or after a bend in the ductwork.

NOTE: Temperature rise can be determined for low-heat and high-heat operation by locking the furnace in each mode of operation. The mode of operation is based on the (HEt) setting on the furnace control board.

3. If the temperature rise is outside this range, first check:
   a. Gas input for heating operation.
   b. Derate for altitude if applicable.
   c. Return and supply ducts for excessive restrictions causing static pressures greater than 0.50-in. w.c.

⚠ WARNING

ELECTRICAL SHOCK HAZARD

Failure to follow this warning could result in personal injury or death.

Blower access door switch opens 115-V power to control. No component operation can occur unless switch is closed. Caution must be taken when manually closing this switch.

To lock the furnace in low heat:

1. On the 3 digit display, navigate to (HEt) and select (25t) to lock the furnace in low-heat operation. See Fig. 45 and Fig. 46.
2. Connect a jumper across R and W/W1 at the thermostat terminals at the furnace control.
3. Allow the burners to ignite and the blower to turn on.
4. Allow the supply temperature to stabilize and verify the proper rise range.

If the temperature rise is too high or too low in low heat:

1. Remove jumpers from R and W/W1.
2. Wait until the blower off delay is completed.
3. Remove blower door.
4. Refer to the **FURNACE CONTROL PROGRAMMING AND NAVIGATION** section of this manual for instructions on adjusting the blower speed.
5. Replace blower door.
6. Re-check low heat temperature rise.

⚠ WARNING

FIRE HAZARD

Failure to follow this warning could result in personal injury, death, and/or property damage.

Reinstall manifold pressure tap plug in gas valve to prevent gas leak.

⚠ WARNING

FURNACE OVERHEATING HAZARD

Failure to follow this caution may result in reduced furnace life.

Recheck temperature rise. It must be within limits specified on the rating plate. Recommended operation is at the mid-point of rise range or slightly above.

To lock the furnace in high heat:

1. Connect a jumper across R and W/W1 and W2 at the thermostat terminals at the furnace control.
2. Allow the burners to ignite and the blower to turn on.
3. Allow the supply temperature to stabilize and verify the proper rise range.

If the temperature rise is too high or too low in high heat:

1. Remove jumpers from R and W/W1 and W2.
2. Wait until the blower off delay is completed.
3. Remove blower door.
4. Refer to the FURNACE CONTROL PROGRAMMING AND NAVIGATION section of this manual for instructions on adjusting the blower speed.
5. Replace blower door.
6. Re-check high heat temperature rise.

After the temperature rise has been verified:

1. Remove jumpers from thermostat terminals.
2. Allow the blower off delay to complete.
3. On the 3 digit display, navigate to (HEt) and select (15t) or (25t) depending on thermostat type. See Fig. 45 and Fig. 46.
4. Proceed to “Adjust Blower Off Delay” or install blower door if complete.

Check Safety Controls

The flame sensor, gas valve, and pressure switch were all checked in the Start-up procedure section as part of normal operation.

1. Check Main Limit Switch
   This control shuts off combustion system and energizes air-circulating blower motor, if furnace overheats. By using this method to check limit control, it can be established that limit is functioning properly and will operate if there is a restricted return-air supply or motor failure. If limit control does not function during this test, cause must be determined and corrected.
   a. Run furnace for at least 5 minutes.
   b. Gradually block off return air with a piece of cardboard or sheet metal until the limit trips.
   c. Unblock return air to permit normal circulation.
   d. Burners will re-light when furnace cools down.
2. Check draft safeguard switch. The purpose of this control is to cause the safe shutdown of the furnace during certain blocked vent conditions.
   a. Verify vent pipe is cool to the touch.
   b. Disconnect power to furnace and remove vent connector from furnace vent elbow.
   c. Restore power to furnace and set room thermostat above room temperature.
   d. After normal start-up, allow furnace to operate for 2 minutes, then block vent elbow in furnace 80 percent of vent area with a piece of flat sheet metal.
   e. Furnace should cycle off within 2 minutes. If gas does not shut off within 2 minutes, determine reason draft safeguard switch did not function properly and correct condition.

NOTE: Should switch remain open longer than 3 minutes, furnace control board will lockout the furnace for 3 hours. To reset furnace control board, turn thermostat below room temperature or from HEAT to OFF and turn 115V power OFF, then back ON.

   f. Remove blockage from furnace vent elbow.
   g. Switch will auto-reset when it cools.
   h. Re-install vent connector.
3. Check Pressure Switch(es)
   This control proves operation of the draft inducer blower.
   a. Turn off 115V power to furnace.
   b. Disconnect inducer motor lead wires from wire harness.
   c. Turn on 115V power to furnace.
   d. Set thermostat to “call for heat” and wait 1 minute. When pressure switch is functioning properly, hot surface igniter should NOT glow and control diagnostic light flashes a status code (32 2). If hot surface igniter glows when inducer motor is disconnected, shut down furnace immediately.
   e. Determine reason pressure switch did not function properly and correct condition.
   f. Turn off 115V power to furnace.
   g. Reconnect inducer motor wires, replace outer door, and turn on 115V power.
   h. Blower will run for 90 seconds before beginning the call for heat again.
   i. Furnace should ignite normally.

Checklist

- Put away tools and instruments. Clean up debris.
- Check Input/Output gas pressure
- Check heat rise per application static pressure
- Cooling CFM per application static pressure
- Verify that blower-OFF delay time is selected as desired.
- Verify that blower and burner access doors are properly installed.
- Cycle test furnace with room thermostat.
- Check operation of accessories per manufacturer’s instructions.
- Review User’s Guide with owner.
- Attach literature packet to furnace.

SERVICE AND MAINTENANCE PROCEDURES

Untrained personnel can perform basic maintenance functions such as cleaning and replacing air filters. All other operations must be performed by trained service personnel. A qualified service person should inspect the furnace once a year.

⚠ WARNING

FIRE, INJURY OR DEATH HAZARD

Failure to follow this warning could result in personal injury, death and/or property damage.

The ability to properly perform maintenance on this equipment requires certain knowledge, mechanical skills, tools, and equipment. If you do not possess these, do not attempt to perform any maintenance on this equipment other than those procedures recommended in the User’s Manual.

⚠ CAUTION

ENVIRONMENTAL HAZARD

Failure to follow this caution may result in environmental pollution. Remove and recycle all components or materials (i.e. oil, refrigerant, control board, etc.) before unit final disposal.

⚠ WARNING

ELECTRICAL SHOCK, FIRE OR EXPLOSION HAZARD

Failure to follow this warning could result in personal injury or death, or property damage.

Before installing, modifying, or servicing system, main electrical disconnect switch must be in the OFF position and install a lockout tag. There may be more than one disconnect switch. Lock out and tag switch with a suitable warning label. Verify proper operation after servicing.

⚠ CAUTION

ELECTRICAL OPERATION HAZARD

Failure to follow this caution may result in improper furnace operation or failure of furnace.

Label all wires prior to disconnection when servicing controls. Wiring errors can cause improper and dangerous operation.

GENERAL

These instructions are written as if the furnace is installed in an upflow application. An upflow furnace application is where the blower is located below the combustion and controls section of the furnace, and conditioned air is discharged upward. Since this furnace can be installed in any of 4 positions, see in Fig. 3, you must revise your orientation to component location accordingly.

ELECTRICAL CONTROLS AND WIRING

The electrical ground and polarity for 115V wiring must be properly maintained. See Fig. 25 for field wiring information, and see Fig. 47 in the Wiring Diagram section for furnace wiring information.

⚠ WARNING

ELECTRICAL SHOCK HAZARD

Failure to follow this warning could result in personal injury or death.

There may be more than one electrical supply to the furnace. Check accessories and cooling unit for additional electrical supplies that must be shut off during furnace servicing. Lock out and tag switch with a suitable warning label.

NOTE: If the polarity is not correct, the STATUS LED on the control will flash rapidly and status code (10 . 1) is displayed. This will prevent the furnace from heating. The control system also requires an earth ground for proper operation of the control and flame-sensing electrode.

The 24V circuit contains an automotive-type, 3A fuse located on the control, see Fig. 29. Any shorts of the 24V wiring during installation, service, or maintenance will cause this fuse to blow. If fuse replacement is required, use ONLY a 3A fuse. The control LED will display status code (24 . 1) when fuse needs to be replaced.

Proper instrumentation is required to service electrical controls. The control in this furnace is equipped with a status code LED (Light-Emitting Diode) and Major/Minor 3 digit codes to aid in installation, servicing, and troubleshooting. Status codes can be viewed at the sight glass in blower access door. The furnace control LED is either ON continuously, rapid flashing, or a code composed of 2 digits. The major status code is displayed on the LED indicator through the door with the first digit being the number of short flashes and the second digit being the number of long flashes. The major status code is displayed in the first 2 digits of the display. The minor status code is displayed in the third digit.

For an explanation of status codes, refer to service label located on blower access door (also on Fig. 46), and the troubleshooting guide which can be obtained from your distributor. See the brief Troubleshooting Guide, see Fig. 53.

Retrieving Stored Fault Codes

The stored status code will not be erased from the control memory, if 115V or 24V power is interrupted. See the Service Label Fig. 46 for more information.

1. To retrieve the last 7 fault codes, proceed with the following:

NOTE: NO thermostat signal may be present at control, and all blower-OFF delays must be completed.

a. Leave 115-V power to furnace turned on.
b. Remove outer access door.
c. Remove the inner blower door.
d. Depress blower door switch to energize the control board.

⚠ CAUTION

SHOCK HAZARD

Failure to follow this caution could result in personal injury.

Do not tape or permanently allow the door switch to be bypassed. Temporarily press the door switch with one hand while accessing the service buttons with your other hand. Do not touch uninsulated electrical components.

e. Press menu/select button until (FLt)
f. Press Next/Option button to cycle through the fault history. Faults remain in memory for 72 hours of powered operation after the last fault occurs. Faults may be manually cleared by selecting (CLr) with the menu/select button.

⚠ WARNING

ELECTRICAL SHOCK HAZARD

Failure to follow this warning could result in personal injury, or death.

Blower access door switch opens 115V power to furnace control. No component operation can occur unless switch is closed. Exercise caution to avoid electrical shock from exposed electrical components when manually closing this switch for service purposes.

CARE AND MAINTENANCE

⚠ WARNING

FIRE OR EXPLOSION HAZARD

Failure to follow this warning could result in personal injury, death and/or property damage.

Never store anything on, near, or in contact with the furnace, such as:

1. Spray or aerosol cans, rags, brooms, dust mops, vacuum cleaners, or other cleaning tools.
2. Soap powders, bleaches, waxes or other cleaning compounds, plastic or plastic containers, gasoline, kerosene, cigarette lighter fluid, dry cleaning fluids, or other volatile fluids.
3. Paint thinners and other painting compounds, paper bags, or other paper products. Exposure to these materials could lead to corrosion of the heat exchangers.

For continuing high performance and to minimize possible furnace failure, periodic maintenance must be performed on this furnace. Consult your local dealer about proper frequency of maintenance and the availability of a maintenance contract.

⚠ WARNING

CARBON MONOXIDE POISONING AND FIRE HAZARD

Failure to follow this warning could result in personal injury, death and/or property damage.

Never operate furnace without a filter or with filter access door removed.

⚠ WARNING

ELECTRICAL SHOCK AND FIRE HAZARD

Failure to follow this warning could result in personal injury, death, and/or property damage.

Turn off the gas and electrical supplies to the furnace and install lockout tag before performing any maintenance or service. Follow the operating instructions on the label attached to the furnace.

⚠ CAUTION

CUT HAZARD

Failure to follow this caution may result in personal injury.

Sheet metal parts may have sharp edges or burrs. Use care and wear appropriate protective clothing, safety glasses and gloves when handling parts, and servicing furnaces.

The minimum maintenance on this furnace is as follows:

1. Check and clean air filter each month or more frequently if required. Replace if torn.
2. Check blower motor and wheel for cleanliness each heating and cooling season. Clean as necessary.
3. Check electrical connections for tightness and controls for proper operation each heating season. Service as necessary.
4. Inspect burner compartment before each heating season for rust, corrosion, soot or excessive dust. If necessary, have furnace and burner serviced by a qualified service agency.
5. Inspect the vent pipe/vent system before each heating season for rust, corrosion, water leakage, sagging pipes or broken fittings. Have vent pipes/vent system serviced by a qualified service agency.
6. Inspect any accessories attached to the furnace such as a humidifier or electronic air cleaner. Perform any service or maintenance to the accessories as recommended in the accessory instructions.

Cleaning and/or Replacing Air Filter

The air filter arrangement will vary depending on the application.

NOTE: If the filter has an airflow direction arrow, the arrow must point towards the blower.

⚠ CAUTION

CUT HAZARD

Failure to follow this caution may result in personal injury.

Sheet metal parts may have sharp edges or burrs. Use care and wear appropriate protective clothing, safety glasses and gloves when handling parts, and servicing furnaces.

To clean or replace filters, proceed as follows:

1. Turn off electrical supply to furnace before removing filter access door.
2. Remove filter cabinet door.
3. Slide filter out of cabinet.
4. If equipped with permanent, washable 3/4-in. (19 mm) filter, clean filter by spraying cold tap water through filter in opposite direction of airflow. Rinse filter and let dry. Oiling or coating of the filter is not recommended. See Table 28 for size information.
5. If equipped with factory specified disposable media filter, replace only with factor specified media filter of the same size.
6. Slide filter into cabinet.
7. Replace filter cabinet door.
8. Turn on electrical supply to furnace.

Table 28 – Filter Size Information - In. (mm)

FURNACE CASING WIDTH	FILTER SIZE		FILTER TYPE
	SIDE RETURN	BOTTOM RETURN	
14-1/2 (368)	16 x 25 x 3/4 (406 x 635 x 19)	14 x 25 x 3/4 (356 x 635 x 19)	Washable*
17-1/2 (445)	16 x 25 x 3/4 (406 x 635 x 19)	16 x 25 x 3/4 (406 x 635 x 19)	Washable*
21 (533)	16 x 25 x 3/4 (406 x 635 x 19)	20 x 25 x 3/4 (508 x 635 x 19)	Washable*
24 (610)	16 x 25 x 3/4 (406 x 635 x 19)	24 x 25 x 3/4 (610 x 635 x 19)	Washable*

*. Recommended

Blower Motor and Wheel Maintenance

To ensure long life and high efficiency, clean accumulated dirt and grease from blower wheel and motor annually.

The steps given here for the blower motor and wheel should be performed by a qualified service agency.

The inducer and blower motors are pre-lubricated and require no additional lubrication. These motors can be identified by the absence of oil ports on each end of the motor.

⚠ WARNING

ELECTRICAL SHOCK HAZARD

Failure to follow this warning could result in personal injury or death.

Blower access door switch opens 115-V power to control. No component operation can occur unless switch is closed. Caution must be taken when manually closing this switch for service purposes.

NOTE: The blower wheel should not be dropped or bent as balance will be affected.

Clean blower motor and wheel as follows:

1. Turn off electrical supply to furnace.
2. Remove outer door.
3. For downflow or horizontal furnaces having vent pipes within the furnace that pass in front of the blower access door:
   a. Disconnect vent connector from furnace vent elbow.
   b. Disconnect and remove short piece of vent pipe from within furnace.
4. Remove 2 screws from blower access door and remove blower access door.
5. All factory wires can be left connected, but field thermostat connections may need to be disconnected depending on their length and routing.
6. Remove 2 screws holding blower assembly to blower deck and slide blower assembly out of furnace.

7. Clean blower wheel and motor using a vacuum with soft brush attachment. Blower wheel blades may be cleaned with a small paint or flux brush. Do not remove or disturb balance weights (clips) on blower wheel blades.
8. Vacuum any loose dust from blower housing, wheel and motor.
9. If a greasy residue is present on blower wheel, remove wheel from the blower housing and wash it with an appropriate degreaser.

NOTE: Before disassembly, mark blower mounting arms, motor, and blower housing so motor and each arm is positioned at the same location during reassembly.

To remove wheel:

a. Disconnect ground wire attached to blower housing.

b. Remove screws securing cutoff plate and remove cutoff plate from housing.

c. Loosen set screw holding blower wheel on motor shaft (160+/-20 in.-lb. when assembling).

d. Remove bolts holding motor to blower housing and slide motor out of wheel (40+/-10 in.-lb. when reassembling).

e. Remove blower wheel from housing.

f. Clean wheel and housing.

10. Reassemble motor and blower by reversing steps 9a, through 9e. Be sure to reattach ground wire to the blower housing.
11. Verify that blower wheel is centered in blower housing and set screw contacts the flat portion of the motor shaft. Loosen set screw on blower wheel and reposition if necessary.
12. Spin the blower wheel by hand to verify that the wheel does not rub on the housing.
13. Reinstall blower assembly in furnace.
14. Reinstall 2 screws securing blower assembly to blower deck.
15. Reconnect blower leads to furnace control. Refer to furnace wiring diagram, and connect thermostat leads if previously disconnected.
16. To check blower for proper rotation:

a. Turn on electrical supply.

⚠ WARNING

ELECTRICAL SHOCK HAZARD

Failure to follow this warning could result in personal injury, or death. Blower access door switch opens 115-V power to furnace control. No component operation can occur unless switch is closed. Exercise caution to avoid electrical shock from exposed electrical components when manually closing this switch for service purposes.

b. Manually close blower access door switch.

NOTE: If R-W/W1 thermostat terminals are jumpered at the time blower access door switch is closed, blower will run for 90 sec before beginning a heating cycle.

c. Perform component self-test as shown at the bottom of the SERVICE label, located on the front of blower access door.

d. Verify blower is rotating in the correct direction

17. If furnace is operating properly, RELEASE BLOWER ACCESS DOOR SWITCH. Remove any jumpers or reconnect any disconnected thermostat leads. Replace blower access door.

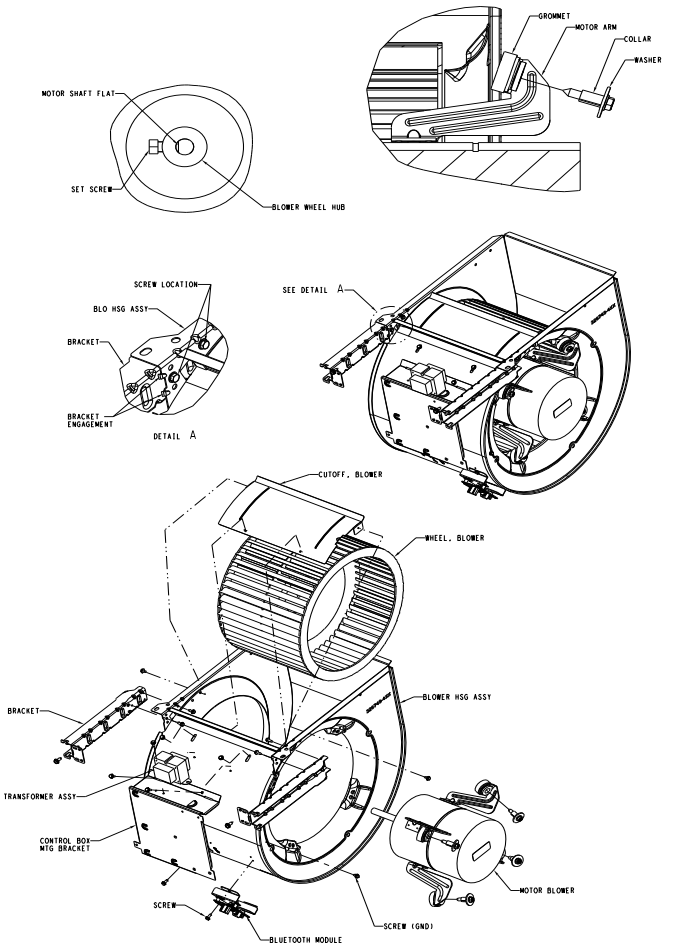

A230430

Fig. 49 – Blower Assembly

18. Downflow or horizontal furnaces with vent pipe through furnace only:

a. Install and connect short piece of vent pipe inside furnace to existing vent.

b. Connect vent connector to vent elbow.

19. Reinstall outer door.
20. Turn on gas supply and cycle furnace through one complete heating and cooling cycle. Verify the furnace temperature rise as shown in Adjustments Section. Adjust temperature rise as shown in Adjustments Section. If outdoor temperature is below 70°F, turn off circuit breaker to outdoor unit before running furnace in the cooling cycle. Turn outdoor circuit breaker on after completing cooling cycle.

Be sure to attach ground wire and reconnect blower harness plugs to blower motor.

Cleaning Heat Exchanger

The steps given here for cleaning heat exchangers should be performed by a qualified service agency.

NOTE: If the heat exchangers get a heavy accumulation of soot and carbon, they should be replaced rather than trying to clean them thoroughly. A build-up of soot and carbon indicates that a problem exists which needs to be corrected, such as improper adjustment of manifold pressure, insufficient or poor quality combustion air, incorrect size or damaged manifold orifice(s), improper gas, or a restricted heat exchanger. Action must be taken to correct the problem.

If it becomes necessary to clean the heat exchangers because of dust or corrosion, proceed as follows:

1. Turn OFF gas and electrical power to furnace.

2. Remove outer access door.
3. Disconnect vent connector from furnace vent elbow.
4. For downflow or horizontal furnace having an internal vent pipe, remove internal vent pipe within the casing.
5. Disconnect wires to the following components. Mark wires to aid in reconnection (be careful when disconnecting wires from switches because damage may occur):
   a. Draft safeguard switch.
   b. Inducer motor.
   c. Pressure switches.
   d. Limit over temperature switch.
   e. Gas valve.
   f. Hot surface igniter.
   g. Flame-sensing electrode.
   h. Flame rollout switches.
6. Remove screws that fasten the collector box assembly to the cell panel. Be careful not to damage the collector box. Inducer assembly and elbow need not be removed from collector box.
7. Disconnect gas line from gas manifold.
8. Remove the four screws that attach the burner assembly to the cell panel. The gas valve and individual burners need not be removed from support assembly. Remove NOx baffles, if installed.

NOTE: Be very careful when removing burner assembly to avoid breaking igniter. See Fig. 50 - Fig. 51 for correct igniter location.

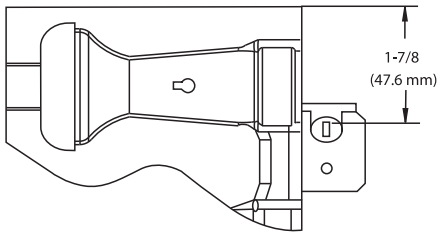

A05026

Fig. 50 – Igniter Position - Top View

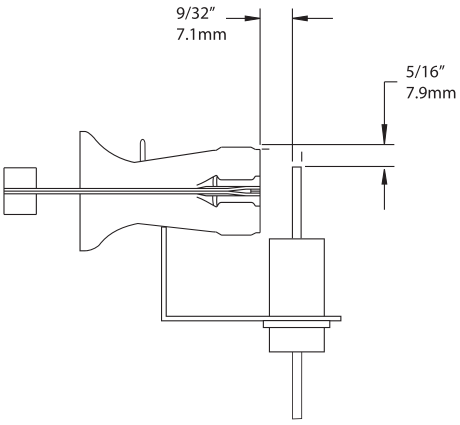

A05025

Fig. 51 – Igniter Position - Side View

NOTE: The materials needed in Step 9 can usually be purchased at local hardware stores.

9. Using a field-provided 25-caliber rifle cleaning brush; a 36-in. (914 mm) long, 1/4-in. (6 mm) diameter steel spring cable; and a variable speed drill, do the following:
   a. Remove metal screw fitting from wire brush to allow insertion into cable.
   b. Insert the twisted wire end of brush into end of spring cable, and crimp tight with crimping tool or crimp by striking with ball-peen hammer. TIGHTNESS IS VERY IMPORTANT. After crimping:
      (1.) Attach variable-speed, reversible drill to the end of spring cable (end opposite brush).
      (2.) Insert brush end of cable into the outlet opening of cell and slowly rotate with drill, see Fig. 52. DO NOT force cable. Gradually insert cable into upper pass of cell.

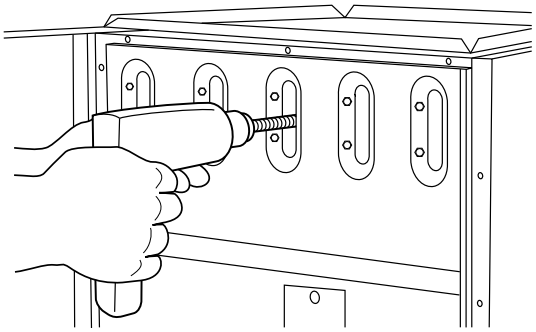

A91252

Fig. 52 – Cleaning Heat Exchanger Cell

      (3.) Work cable in and out of cell 3 or 4 times to obtain sufficient cleaning. DO NOT pull cable with great force. Reverse drill and gradually work cable out.
      (4.) Insert brush end of cable in burner inlet opening of cell, and proceed to clean 2 lower passes of cell in same manner as upper pass.
      (5.) Repeat foregoing procedures until each cell in furnace has been cleaned.
      (6.) Using vacuum cleaner, remove residue from each cell.
      (7.) Using vacuum cleaner with soft brush attachment, clean burner assembly.
      (8.) Clean flame sensor with fine steel wool.
      (9.) Install NOx baffles (if removed).
      (10.) Reinstall burner assembly. Center burners in cell openings.
10. Remove old sealant from cell panel and collector box flange.
11. Spray releasing agent on the heat exchanger cell panel where collector box assembly contacts cell panel.

NOTE: A releasing agent such as cooking spray or equivalent (must not contain corn or canola oil, aromatic or halogenated hydrocarbons or inadequate seal may occur) and RTV sealant (G.E. 162, 6702, or Dow-Corning 738) are needed before starting installation. DO NOT substitute any other type of RTV sealant. G.E. 162 (P771-9003) is available through RCD in 3-oz tubes.

12. Apply new sealant to flange of collector box and attach to cell panel using existing screws, making sure all screws are secure.
13. Reconnect wires to the following components (Use connection diagram on wiring label, if wires were not marked for reconnection locations.):
   a. Draft safeguard switch.
   b. Inducer motor.
   c. Pressure switches.
   d. Limit over temperature switch.
   e. Gas valve.
   f. Hot surface igniter.
   g. Flame-sensing electrode.
   h. Flame rollout switches.
14. Reinstall internal vent pipe, if applicable.
15. Reinstall vent connector on furnace vent elbow. Securely fasten vent connector to vent elbow with 2 field-supplied, corrosion-resistant, sheet metal screws located 180° apart.
16. Replace blower access door only if it was removed.

17. Set thermostat above room temperature and check furnace for proper operation.
18. Verify blower airflow and speed changes between heating and cooling.

⚠ WARNING

FIRE OR EXPLOSION HAZARD

Failure to follow this warning could result in personal injury, death, and/or property damage.

Never purge a gas line into a combustion chamber. Never test for gas leaks with an open flame. Use a commercially available soap solution made specifically for the detection of leaks to check all connections. A fire or explosion may result causing property damage, personal injury or loss of life.

19. Check for gas leaks.

SEQUENCE OF OPERATION

NOTE: Furnace control must be grounded for proper operation or else control will lock out. Control is grounded through green/yellow wire routed to gas valve and burner box screw. Using the schematic diagram in Fig. 47, follow the sequence of operation through the different modes. Read and follow the wiring diagram very carefully.

NOTE: If a power interruption occurs during a call for heat (W/W1 or W/W1-and-W2), the control will start a 90-second blower-only ON period two seconds after power is restored, if the thermostat is still calling for gas heating. The LED light will flash code 12 and display will show (!2 . !) during the 90-second period, after which the LED will be ON continuous, as long as no faults are detected. After the 90-second period, the furnace will respond to the thermostat normally.

The blower door must be installed for power to be conducted through the blower door interlock switch ILK to the furnace control CPU, transformer TRAN, inducer motor IDM, blower motor BLWM, hot-surface igniter HSI, and gas valve GV.

1. Comfort Heat ® Technology - Two-Stage Heating (Adaptive Mode) with Single-Stage Thermostat.

NOTE: See Fig. 30 for thermostat connections. Heating Thermostat Type (Htt) can be set to either single stage (1St) or two-stage (2St) on the control (see the Furnace Control Programming and Navigation section of this instruction). When set to (1St), the adaptive heating mode will be used in response to a call for heat. When the W2 thermostat terminal is energized it will always cause high-heat operation when the R-to-W circuit is closed, regardless of the setting of (Htt). This furnace can operate as a two-stage furnace with a single-stage thermostat because the furnace control CPU includes a programmed adaptive sequence of controlled operation, which selects low-heat or high-heat operation. This selection is based upon the stored history of the length of previous gas-heating periods of the single-stage thermostat.

The furnace will start up in either low- or high-heat. If the furnace starts up in low-heat, the control CPU determines the low-heat on-time (from 0 to 16 minutes) which is permitted before switching to high-heat.

If power is interrupted, the stored history is erased and the control CPU will select low-heat for up to 16 minutes and then switch to high-heat, as long as the thermostat continues to call for heat. Subsequent selection is based on stored history of the thermostat cycle times.

The wall thermostat “calls for heat”, closing the R-to-W circuit. The furnace control performs a self-check, verifies the low-heat and high-heat pressure switch contacts LPS and HPS are open, and starts the inducer motor IDM in high-speed.

a. Inducer Prepurge Period

(1.) If the furnace control CPU selects low-heat operation the inducer motor IDM comes up to speed, the low-heat pressure switch LPS closes and the furnace control CPU begins a 15-second prepurge period. If the low-heat pressure switch LPS fails to remain closed, the inducer motor IDM will remain running at high-speed. After the low-heat pressure switch re-closes, the furnace control CPU will begin a 15-second prepurge period, and continue to run the inducer motor IDM at high-speed.

(2.) If the furnace control CPU selects high-heat operation, the inducer motor IDM remains running at high-speed, and the high-heat pressure switch relay HPSR is energized to close the NO contact. When sufficient pressure is available the high-heat pressure switch HPS closes, and the high-heat gas valve solenoid GV-HI is energized. The furnace control CPU begins a 15-second prepurge period after the low-heat pressure switch LPS closes. If the high-heat pressure switch HPS fails to close and the low-heat pressure switch LPS closes, the furnace will operate at low-heat gas flow rate until the high-heat pressure switch closes for a maximum of 2 minutes after ignition.

b. Igniter Warm-Up

At the end of the prepurge period, the Hot-Surface Igniter HSI is energized for a 17-second igniter warm-up period.

c. Trial-For-Ignition Sequence

When the igniter warm-up period is completed the main gas valve relay contact GVR closes to energize the gas valve solenoid GV-M. Simultaneously, the 24V humidifier terminal HUM is energized and remains energized while the gas valve solenoid is energized. The gas valve solenoid GV-M permits gas flow to the burners where it is ignited by the HSI. Five seconds after the GVR closes, a 2-second flame proving period begins. The HSI igniter will remain energized until the flame is sensed or until the 2-second flame proving period begins. If the furnace control CPU selects high-heat operation, the high-heat gas valve solenoid GV-HI is also energized.

d. Flame-Proving

When the burner flame is proved at the flame-proving sensor electrode FSE, the inducer motor IDM switches to low-speed unless the furnace is operating in high-heat, and the furnace control CPU begins the blower-ON delay period and continues to hold the gas valve GV-M open. If the burner flame is not proved within two seconds, the control CPU will close the gas valve GV-M, and the control CPU will repeat the ignition sequence for up to three more Trials-For-Ignition before going to Ignition-Lockout. Lockout will be reset automatically after three hours, or by momentarily interrupting 115 VAC power to the furnace, or by interrupting 24 VAC power at SEC1 or SEC2 to the furnace control CPU (not at W/W1, G, R, etc.). If flame is proved when flame should not be present, the furnace control CPU will lock out of Gas-Heating mode and operate the inducer motor IDM on high speed until flame is no longer proved.

e. Blower-ON Delay

If the burner flame is proven the blower-ON delays for low-heat and high-heat are as follows:

Low-Heat - 45 seconds after the gas valve GV-M is opened the blower motor BLWM is turned ON at low-heat airflow.

High-Heat - 25 seconds after the gas valve GV-M is opened the BLWM is turned ON at high-heat airflow. Simultaneously, the electronic air cleaner terminal EAC-1 is energized and remain energized throughout the heating cycle.

f. Switching from Low- to High-Heat

If the furnace control CPU switches from low-heat to high-heat, the furnace control CPU will switch the inducer motor IDM speed from low to high. The high-heat pressure switch relay HPSR is energized to close the NO contact. When sufficient pressure is available the high-heat pressure switch HPS closes, and the high-heat gas valve solenoid GV-HI is energized. The

blower motor BLWM will transition to high-heat airflow five seconds after the furnace control CPU switches from low-heat to high-heat.

g. Switching from High- to Low-Heat
The furnace control CPU will not switch from high-heat to low-heat while the thermostat R-to-W circuit is closed when using a single-stage thermostat.

h. Blower-OFF Delay
When the thermostat is satisfied, the R to W circuit is opened, de-energizing the gas valve GV-M, stopping gas flow to the burners and de-energizing the humidifier terminal HUM. The inducer motor IDM will remain energized for a 5-second post-purge period, after which the inducer motor IDM will stop. The blower motor BLWM and air cleaner terminal EAC-1 will remain energized at low-heat airflow or transition to low-heat airflow for 90, 120, 150, or 180 seconds (depending on the HEAT-OFF delay selection). The furnace control CPU is factory-set for a 120-second Heat-OFF delay.

2. **Two-Stage Thermostat and Two-Stage Heating**
See Fig. 30 for thermostat connections.

NOTE: In this mode (HEt) must be set to (2St) to select the low-heat only operation mode in response to closing the thermostat R-to-W1 circuit. Closing the thermostat R-to- W1-and-W2 circuits always causes high-heat operation, regardless of the setting of (HEt).

The wall thermostat “calls for heat”, closing the R-to-W1 circuit for low-heat or closing the R-to-W1-and-W2 circuits for high-heat. The furnace control performs a self-check, verifies the low-heat and high-heat pressure switch contacts LPS and HPS are open, and starts the inducer motor IDM in high-speed.

The start up and shut down functions and delays described in item 1. above apply to the 2-stage heating mode as well, except for switching from low- to high-Heat and vice versa.

a. Switching from Low- to High-Heat
If the thermostat R-to-W1 circuit is closed and the R-to-W2 circuit closes, the furnace control CPU will switch the inducer motor IDM speed from low to high. The high-heat pressure switch relay HPSR is energized to close the NO contact. When sufficient pressure is available the high-heat pressure switch HPS closes, and the high-heat gas valve solenoid GV-HI is energized. The blower motor BLWM will transition to high-heat airflow five seconds after the R-to-W2 circuit closes.

b. Switching from High- to Low-Heat
If the thermostat R-to- W2 circuit opens, and the R-to-W1 circuit remains closed, the furnace control CPU will switch the inducer motor IDM speed from high to low. The high-heat pressure switch relay HPSR is de-energized to open the NO contact and de-energize the high-heat gas valve solenoid GV-HI. When the inducer motor IDM reduces pressure sufficiently, the high-heat pressure switch HPS will open. The gas valve solenoid GV-M will remain energized as long as the low-heat pressure switch LPS remains closed. The blower motor BLWM will transition to low-heat airflow five seconds after the R-to-W2 circuit opens.

3. **Cooling mode**
The thermostat “calls for cooling.”

a. **Single-Speed Cooling**
See Fig. 30 for thermostat connections. The thermostat closes the R-to-G-and-Y circuits. The R-to- Y circuit starts the outdoor unit, and the R-to-G-and-Y/Y2 circuits start the furnace blower motor BLWM on high cooling airflow. High cooling airflow is based on the high cooling speed (CL2) selection. The electronic air cleaner terminal EAC-1 is energized with 115 VAC when the blower motor BLWM is operating. When the thermostat is satisfied, the R-to-G-and-Y circuits are opened. The outdoor unit will stop, and the furnace blower motor BLWM will continue operating at cooling airflow for an additional 5, 30, or 90 seconds (depending on the cooling blower-OFF delay (Cod) setting). The furnace CPU is factory set for a 90 second cooling blower-OFF delay (see Fig. 45)

b. **Single-Stage Thermostat and Two-Speed Cooling (Adaptive Mode)**
See Fig. 25 for thermostat connections. This furnace can operate a two-speed cooling unit with a single-stage thermostat because the furnace control CPU includes a programmed adaptive sequence of controlled operation, which selects low-cooling or high-cooling operation. This selection is based upon the stored history of the length of previous cooling period of the single-stage thermostat.

NOTE: (Ctt) must be set to (1St) to enable the adaptive cooling mode in response to a call for cooling. See Fig. 45. When (Ctt) is set to (1St) the furnace control CPU can turn on the air conditioning relay ACR to energize the Y/Y2 terminal and switch the outdoor unit to high-cooling.

The furnace control CPU can start up the cooling unit in either low- or high-cooling. If starting up in low-cooling, the furnace control CPU determines the low-cooling on-time (from 0 to 20 minutes) which is permitted before switching to high-cooling. If the power is interrupted, the stored history is erased and the furnace control CPU will select low-cooling for up to 20 minutes and then energize the air conditioning relay ACR to energize the Y/Y2 terminal and switch the outdoor unit to high-cooling, as long as the thermostat continues to call for cooling. Subsequent selection is based on stored history of the thermostat cycle times.

The wall thermostat “calls for cooling”, closing the R-to-G-and-Y circuits. The R-to-Y1 circuit starts the outdoor unit on low-cooling speed, and the R-to-G-and-Y1 circuits starts the furnace blower motor BLWM at low-cooling airflow. Low-cooling airflow is based on the low cooling blower speed (CL 1) selection. See Fig. 45.

If the furnace control CPU switches from low-cooling to high-cooling, the furnace control CPU will energize the air conditioning relay ACR. When the air conditioning relay ACR is energized the R-to-Y1-and-Y2 circuits switch the outdoor unit to high-cooling speed, and the R-to-G-and-Y1-and-Y/Y2 circuits transition the furnace blower motor BLWM to high-cooling airflow. High-cooling airflow is based on high cooling blower speed (CL2) selection. See Fig. 45.

NOTE: When transitioning from low-cooling to high-cooling the outdoor unit compressor will shut down for 1 minute while the furnace blower motor BLWM transitions to run at high-cooling airflow. The electronic air cleaner terminal EAC-1 is energized with 115 VAC whenever the blower motor BLWM is operating.

When the thermostat is satisfied, the R-to-G-and-Y circuit are opened. The outdoor unit stops, and the furnace blower BLWM and electronic air cleaner terminal EAC-1 will remain energized for an additional, 30, or 90 seconds (depending on the cooling blower-OFF delay (Cod) setting). The furnace CPU is factory set for a 90 second cooling blower-OFF delay (see Fig. 45).

c. Two-Stage Thermostat and Two-Speed Cooling

See Fig. 30 for thermostat connections

NOTE: (Ctt) setting must be set to (2St) to allow thermostat control of the outdoor unit staging (see Fig. 45).

The thermostat closes the R-to-G-and-Y1 circuits for low-cooling or closes the R-to-G-and-Y1-and-Y2 circuits for high-cooling. The R-to-Y1 circuit starts the outdoor unit on low-cooling speed, and the R-to-G-and-Y1 circuit starts the furnace blower motor BLWM at low-cooling airflow based on low cooling blower speed (CL 1) selection. The R-to-Y1-and-Y2 circuits start the outdoor unit on high-cooling speed, and the R-to-G-and-Y/Y2 circuits start the furnace blower motor BLWM at high-cooling airflow. High-cooling airflow is based on high cooling blower speed (CL2) selection (see Fig. 45). The electronic air cleaner terminal EAC-1 is energized with 115 VAC

whenever the blower motor BLWM is operating. When the thermostat is satisfied, the R-to-G-and-Y1 or R-to-G-and-Y1-and-Y2 circuits are opened. The outdoor unit stops, and the furnace blower BLWM and electronic air cleaner terminal EAC-1 will remain energized for an additional 5, 30, or 90 seconds (depending on the cooling blower-OFF delay (CAd) setting). The furnace CPU is factory set for a 90 second cooling blower-OFF delay (see Fig. 45).

4. **Dehumidification Mode**
   See Fig. 30 for thermostat connections. The dehumidification output on the Thermostat should be connected to the furnace control thermostat terminal DHUM. When there is a dehumidify demand, the DHUM input is activated, which means 24 VAC signal is removed from the DHUM input terminal. In other words, the DHUM input logic is reversed. The DHUM input is turned ON when no dehumidify demand exists. Once 24 VAC is detected by the furnace control on the DHUM input, the furnace control operates in dehumidify mode. If the DHUM input is removed for more than 48 hours, the furnace control reverts back to non-dehumidify mode. The cooling operation described in item 3. above also applies to operation with a dehumidification thermostat. The exceptions are listed below:
   a. Low Cooling
   When the R-to-G-and-Y1 circuit is closed and there is a demand for dehumidification, the low cooling airflow demand is reduced by 10 percent.
   b. High Cooling
   When the R-to-G-and Y/Y2 circuit is closed and there is a demand for dehumidification, high cooling airflow demand is reduced by 10 percent.
   c. Cooling OFF-Delay
   When the “call for cooling” is satisfied and there is a demand for dehumidification, the cooling blower-OFF delay is decreased from current setting to 5 seconds.
5. **Super-Dehumidify Mode**
   Super-Dehumidify mode can only be entered if the furnace control is in the Dehumidify mode and there is a demand for dehumidification. The cooling operation described in item 3. above also applies to operation with a dehumidification thermostat. The exceptions are listed below:
   a. When the R-to-Y1 circuit is closed, R-to-G circuit is open, and there is a demand for dehumidification, the furnace blower motor BLWM will drop the blower airflow to 65 percent of low-cooling airflow for a maximum of 10 minutes each cooling cycle or until the R-to-G circuit closes or the demand for dehumidification is satisfied.
   b. When the R-to-Y/Y2 circuit is closed, R-to-G circuit is open, and there is a demand for dehumidification, the furnace blower motor BLWM will drop the blower airflow to 65 percent of high-cooling airflow for a maximum of 10 minutes each cooling cycle or until the R-to-G circuit closes or the demand for dehumidification is satisfied. High-cooling airflow is based on high cooling blower speed (CL2) selection, see Fig. 45.
   c. When the “call for cooling” is satisfied and there is a demand for dehumidification, the cooling blower-off delay is decreased from current setting to 5 seconds.
6. **Continuous Fan Mode**
   When the R-to-G circuit is closed by the thermostat, the blower motor BLWM will operate at continuous fan airflow. Continuous fan airflow selection is initially based on the CF (continuous fan) selection shown in Fig. 45. Factory default is shown in Table 13 thru Table 20. Terminal EAC-1 is energized as long as the blower motor BLWM is energized.
   During a call for heat, the furnace control CPU will transition the blower motor BLWM to continuous fan airflow, or low-heat airflow, whichever is lowest. The blower motor BLWM will remain ON until the main burners ignite then shut OFF and remain OFF for the blower-ON delay (45 sec in low-heat, and 25 sec in high-heat), allowing the furnace heat exchangers to heat up more quickly, then restarts at the end of the blower-ON delay period at low-heat or high-heat airflow, respectively.The blower motor BLWM will revert to continuous fan airflow after the heating cycle is completed. In high-heat, the furnace control CPU will drop the blower motor BLWM to low-heat airflow during the selected blower-OFF delay period before transitioning to continuous fan airflow.
   When the thermostat “calls for low-cooling”, the blower motor BLWM will switch to operate at low-cooling airflow. When the thermostat is satisfied, the blower motor BLWM will operate an additional 90 sec at low-cooling airflow before transitioning back to continuous-blower airflow.
   When the thermostat “calls for high-cooling”, the blower motor BLWM will operate at high cooling airflow. When the thermostat is satisfied, the blower motor BLWM will operate an additional 90 sec at high-cooling airflow before transitioning back to continuous fan airflow. When the R-to-G circuit is opened, the blower motor BLWM will continue operating for an additional 5 sec, if no other function requires blower motor BLWM operation.

The primary continuous fan airflow (CFn) can be selected using the 3-digit display/pushbuttons or via the service tech app. Refer to the FURNACE CONTROL PROGRAMMING AND NAVIGATION section of this manual for instructions on adjusting the blower speed via the control board interface. Alternate continuous fan airflows, (CF2 and CF3), can only be modified via the service tech app.

Setting Active Continuous Fan Speed

Method 1: If the G input (or FAN switch/setting at the thermostat) is turned OFF for 1 to 3 seconds and then back ON, the active continuous fan speed will cycle to the next speed (CFn→CF2). Repeating will change the active continuous fan speed to the next speed (CF2→CF3). Repeating again will set the active continuous fan back to the primary speed (CFn). This method is intended as a way for home owners to adjust the continuous fan speed setting from the thermostat depending on their needs.

Method 2: The active continuous fan speed (CFn, CF2 or CF3) can be selected via the service tech app.

7. **Heat Pump**
   See Fig. 30 for thermostat connections. When installed with a heat pump, the furnace control automatically changes the timing sequence to avoid long blower off times during demand defrost cycles. Whenever W/W1 is energized along with Y1 or Y/Y2, the furnace control CPU will transition to or bring on the blower motor BLWM at cooling airflow, or low-heat airflow whichever is lowest. The blower motor BLWM will remain on until the main burners ignite then shut OFF and remain OFF for 25 seconds before coming back on at heating airflow. When the W/W1 input signal disappears, the furnace control begins a normal inducer post-purge period while changing the blower airflow. If Y/Y2 input is still energized the furnace control CPU will transition the blower motor BLWM airflow to cooling airflow. If Y/Y2 input signal disappears and the Y1 input is still energized the furnace control CPU will transition the blower motor BLWM to low-cooling airflow. If both the Y1 and Y/Y2 signals disappear at the same time, the blower motor BLWM will remain on at low-heat airflow for the selected blower-OFF delay period. At the end of the blower- OFF delay, the blower motor BLWM will shut OFF unless G is still energized, in which case the blower motor BLWM will operate at continuous blower airflow.

Troubleshooting

Refer to the service label (Fig. 46) for troubleshooting information. Also, the Troubleshooting Guide (Fig. 53) can be a useful tool in isolating furnace operation problems. Beginning with "Start," answer each question and follow the appropriate arrow to the next item. The Guide will help identify the problem or failed component. After replacing any component, verify correct operation sequence.

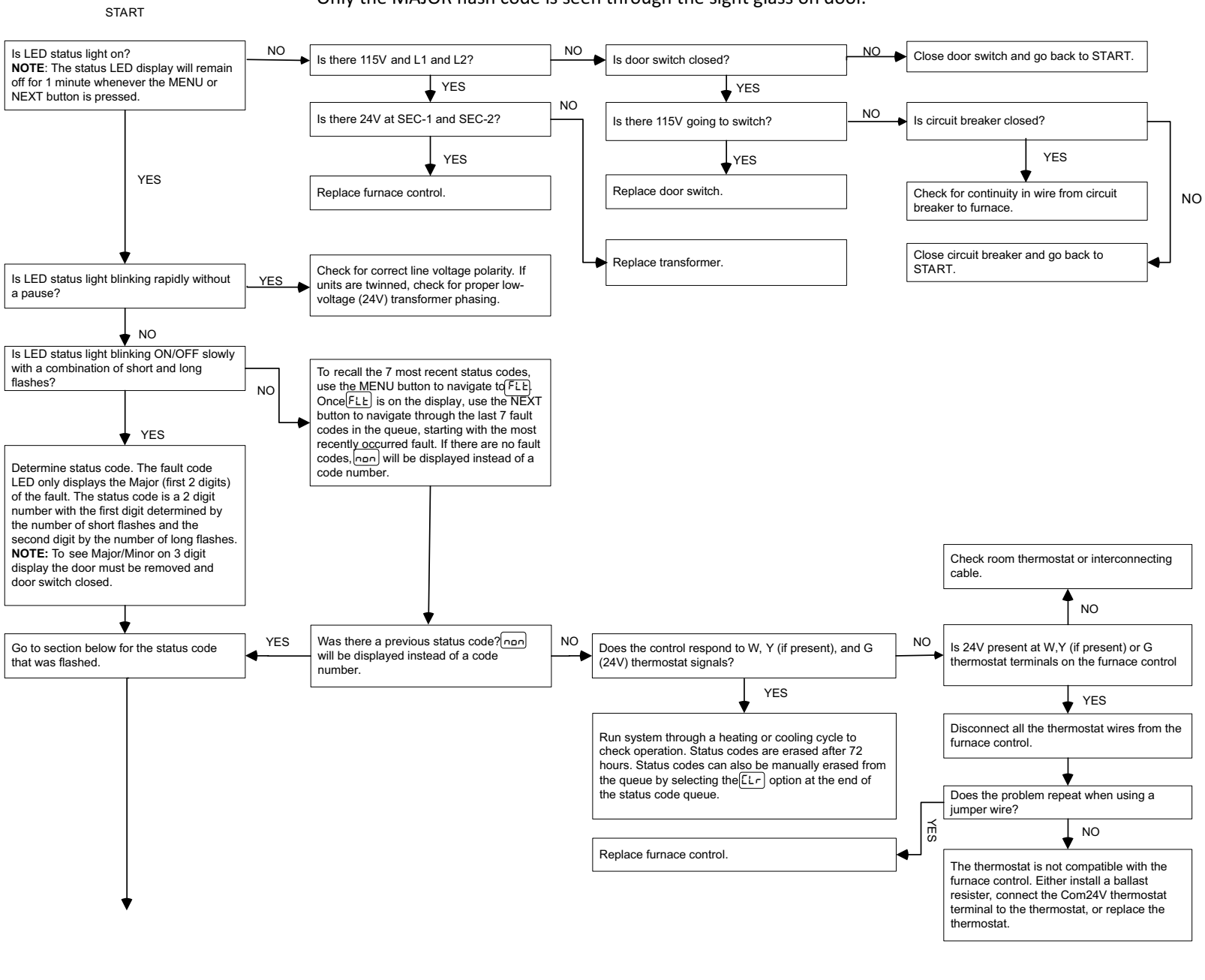

A230354

Manufacturer reserves the right to change, at any time, specifications and designs without notice and without obligations.

Only the MAJOR flash code is seen through the sight glass on door.

10.1 L1 POLARITY FAULT
Rapid flash LED
10.2 Dissipation system active, operate blower.

12.1 "W" ON at power up – Normal operation. Blower runs for 90 seconds, if unit is powered up during a call for het (R-W closed) or when (R-W opens) during the blower on-delay period.

13.1 LIMIT CIRCUIT LOCKOUT – Lockout occurs if the limit, draft safeguard, flame rollout, or blocked vent switch*(if used) is open longer than 3 minutes. Control will auto-reset after 3 hours. See code 33.

14.1 IGNITION LOCKOUT – System failed to ignite gas and prove flame in 4 attempts. Control will auto-reset after 3 hours. See status code 34.
14.2 FLAME LOST – 3 times after 70s of heating
14.3 LOCKOUT – 7 loss of flame events during a heat request

15.1 BLOWER RPM LOCKOUT - Lockout occurs when no blower rpm is detected.
15.2 LOCKOUT - Failed to reach 500 rpm during start up

Check for:
- Loose blower wire connections
- Failed blower motor.

21.1 24VAC sensed on gas valve when shouldn't be. – Turn off power and wait 5 minutes to retry.

Check for:
- Stuck closed gas valve relay on control.
- Miswire or short at gas valve wire.

22.1 FALSE FLAME – Flame is proved while gas valve is de-energized. Inducer will run until fault is cleared.

Check for:
- Stuck open or leaky gas valve.

31.6 OPEN HIGH HEAT PRESSURE SWITCH – HPS did not close for one minute after gas valve closed or has reopened.
31.7 HIGH HEAT ONLY for next cycle- HPS failed to close in 75s when transitioning from low to high heat.

Check for
- Failed to close secondary pressure switch after three trials
- Excessive wind
- Restricted vent
- Defective inducer motor
- Low inlet gas pressure (if LGPS used)
- Inadequate combustion air supply
- Proper vent sizing
- Disconnected or obstructed pressure tubing

If it opens during blower on-delay period, blower will come on for the selected blower off-delay.

32.2 OPEN LOW PRESSURE SWITCH – If LPS is open longer than 5 minutes or has reopened, inducer shuts off for 15 minutes before retry. If opens during blower on-delay period, blower will come on for the selected blower off-delay. On two-stage furnaces, if the low-heat pressure switch opens within five minutes after the main gas valve input turned ON, the new heating cycle SHALL be restricted to high-heat for the next cycle only, even if low-heat only is selected. 32.2 will continue to be shown during the forced high heat cycle.
See Code 31.6 and 31.7 for troubleshooting.

33.1 A SWITCH HAS OPENED IN THE MAIN LIMIT – Indicates the limit or flame rollout is open. Blower will run for 4 minutes or until open switch remakes whichever is longer. If open longer than 3 minutes, code changes to lockout #13. If open less than 3 min. status code #33 continues to flash until blower shuts off. Flame rollout switch and BVSS requires manual reset.

Check for (applies to all):
- Dirty filter or restricted duct system
- Loose blower wheel
- Defective switch or connections
- Defective blower motor
- Improper gas input adjustment

41.1 NO BLOWER RPM - No blower rpm at startup
41.2 NO BLOWER RPM - No blower rpm when blower motor is running.
41.3 Failed to reach 500 rpm at startup

Check for:
- Loose blower wire connections
- Failed blower motor.

43.1 HPS closed before LPS

45.1 CONTROL FAILURE – flame circuit fault, memory mismatch or sequence error.
45.2 CONTROL FAILURE – gas valve relay will not close.
45.3 CONTROL FAILURE – EEPROM memory issue.
45.4 CONTROL FAILURE – Micro loss of Comm

For code 45, cycle power, if code 45 repeats, replace control.

51.1 OAT OPEN - Outdoor Air Temperature sensor connection is open
51.2 OAT SHORT - Outdoor Air Temperature sensor wires are shorted

Check for:
- Loose connection at control board screw terminals.
- Cut or shorted wires to the OAT.
- Damaged OAT sensor

52.1 SAT OPEN - Supply Air Temperature sensor connection is open
52.2 SAT SHORT - Supply Air Temperature sensor wires are shorted

Check for:
- Loose connection at control board screw terminals.
- Cut or shorted wires to the SAT.
- Damaged SAT sensor

53.1 RAT OPEN - Return Air Temperature sensor connection is open
53.2 RAT SHORT - Return Air Temperature sensor is shorted

Check for:
- RAT firmly plugged into control board.
- Damaged RAT sensor

A230353A

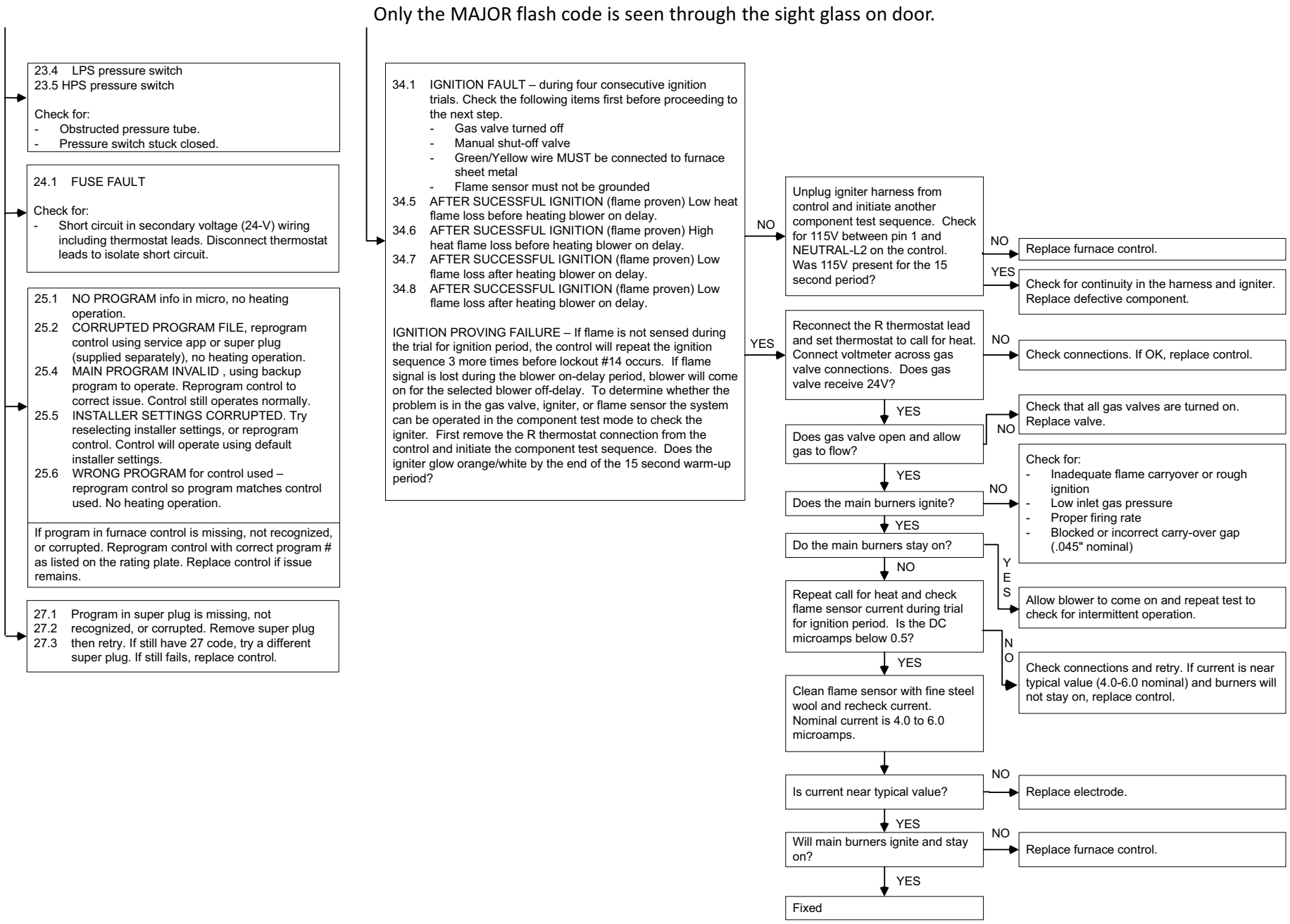

Fig. 53 – Troubleshooting Guide

PARTS REPLACEMENT INFORMATION GUIDE

CASING GROUP

Outer door
Blower door
Top filler plate
Bottom filler plate
Bottom enclosure

ELECTRICAL GROUP

Control bracket
Junction box
Limit switch(es)
Circuit board
Super Plug
Door switch
Transformer
Wiring harness 115-V
Wiring harness 24-V

BLOWER GROUP

Blower housing
Blower cutoff
Blower motor
Blower wheel grommet

GAS CONTROL GROUP

Manifold
Burner assembly
Orifice
Flame sensor
Hot surface igniter
Gas valve
Manual reset limit switches
Burner support assembly

HEAT EXCHANGER GROUP

Heat exchanger cell
Cell panel
Lox NOx baffle (California models only)

INDUCER GROUP

Housing assembly
Pressure switch
Inducer motor
Inducer wheel
Vent elbow assembly
Draft safeguard switch

TO OBTAIN INFORMATION ON PARTS: Consult your installing dealer or classified section of your local telephone directory under “Heating Equipment” or “Air Conditioning Contractors and Systems” headings for dealer listing by brand name or contact:

CARRIER
7310 West Morris Street
Indianapolis, IN 46231 U.S.A.

EXAMPLE OF MODEL NUMBER

MODEL	HEATING SIZE	MOTOR	WIDTH	VOLTAGE	MINOR SERIES	COOLING AIRFLOW (CFM)
58TN0B	045	C	17	—	—	12

TRAINING

My Learning Center is your central location for professional residential HVAC training resources that help strengthen careers and businesses. We believe in providing high quality learning experiences both online and in the classroom.

Access My Learning Center with your HVACpartners credentials at www.mlctraining.com. Please contact us at mylearning@carrier.com with questions.

⚠ WARNING

FIRE, EXPLOSION, ELECTRICAL SHOCK AND CARBON MONOXIDE POISONING HAZARD

Failure to follow this warning could result in dangerous operation, personal injury, death or property damage.

Improper installation, adjustment, alteration, service, or maintenance can cause personal injury, property damage, or death. Consult a qualified installer, service agency, or your local gas supplier for information or assistance. The qualified installer or service agency must use only factory-authorized replacement parts, kits, or accessories when modifying this product.

© 2026 Carrier. All rights reserved.

Edition Date: 3/26

Catalog No: 58TN0B-03SI

Replaces: **58TN0B-02SI**

Manufacturer reserves the right to change, at any time, specifications and designs without notice and without obligations.