58SP0B/58SP1B
80% AFUE, Non-Communicating, Single Stage, Variable 25-Speed, ECM Motor, 4-Way Multipoise, Non-Condensing Gas Furnace with InteliSense™

Carrier®
Turn to the experts

Installation, Start–Up, Operating and Service and Maintenance Instructions

Read the entire instruction manual before starting the installation.

TABLE OF CONTENTS

Table 1 – Dimensions 2
SAFETY CONSIDERATIONS 3
INTRODUCTION 4
ELECTROSTATIC DISCHARGE (ESD) PRECAUTIONS PROCEDURE 5
LOCATION 5
AIR FOR COMBUSTION AND VENTILATION 7
Table 2 – Minimum Free Area Required for Each Combustion Air opening of Duct to Outdoors 8
Table 3 – Minimum Space Volumes for 100% Combustion, Ventilation, and Dilution from Indoors 8
INSTALLATION 9
Table 4 – Opening Dimensions - In. (mm) 10
AIR DUCTS 12
GAS PIPING. 13
Table 5 – Maximum Capacity of Pipe 14
ELECTRICAL CONNECTIONS. 14
Table 6 – Electrical Data 15
INTELISENSE™ TECHNOLOGY 17
ACCESSORIES 17
VENTING. 19
Table 7 – Combined Appliance Maximum Input Rating in Thousands of BTUh per Hour 20
Table 8 – Minimum Allowable Input Rating of Space-Heating Appliance in Thousands of BTUh per Hour 20
Table 9 – Recommended Minimum Vent Height Per Furnace and Vent Orientation 22
AIR DELIVERY - CFM. 24
Table 10 – Air Delivery - CFM (with filter)* 24
Table 11 – Default Airflow Settings 28
FURNACE CONTROL PROGRAMMING AND NAVIGATION 28
Table 12 – System Status Display Codes. 28
Table 13 – Main Menu Options 29
SERVICE LABEL 30
Table 14 – Test Sequence 31
WIRING DIAGRAM 32
ADJUSTMENTS 32
Table 15 – Altitude Derate Multiplier for U.S.A. 33
Table 16 – Gas Rate (CU ft./hr). 33
Table 17 – Orifice Size* and Manifold Pressure (in. w.c.) for Gas Input RateTabulated Data Based on 22,000 BTUh per burner 34
Table 18 – Orifice Size* and Manifold Pressure (in. w.c.) for Gas Input Rate Tabulated Data Based on 21,000 BTUh per burner 34
SERVICE AND MAINTENANCE PROCEDURES. 36
CARE AND MAINTENANCE 37
Table 19 – Filter Size Information - In. (mm) 38
SEQUENCE OF OPERATION 40
TROUBLESHOOTING GUIDE 43
GAS FURNACE CHECKLIST 46
PARTS REPLACEMENT INFORMATION GUIDE 47
MODEL NOMENCLATURE 47
TRAINING. 47

To learn more about this appliance and installation via a mobile device, go to https://carrier.hvacpartners.com/NFC or use the QR code below. To access airflow tables or troubleshooting guide on your mobile device go to mlctraining.com/training/techdocs/81/ or use the QR code below.

To learn more about InteliSense, go to Carrier.hvacpartners.com/InteliSense or use the QR code below.

Mobile App QR Code | Airflow QR Code | InteliSense

A230211

Use of the AHRI Certified TM Mark indicates a manufacturer's participation in the program. For verification of certification for individual products, go to www.ahridirectory.org .

ISO 9001 Quality

A200103

Portions of the text and tables are reprinted from NFPA 54/ANSI Z223.1E, with permission of National Fire Protection Association, Quincy, MA 02269 and American Gas Association, Washington DC 20001. This reprinted material is not the complete and official position of the NFPA or ANSI on the referenced subject, which is represented only by the standard in its entirety.

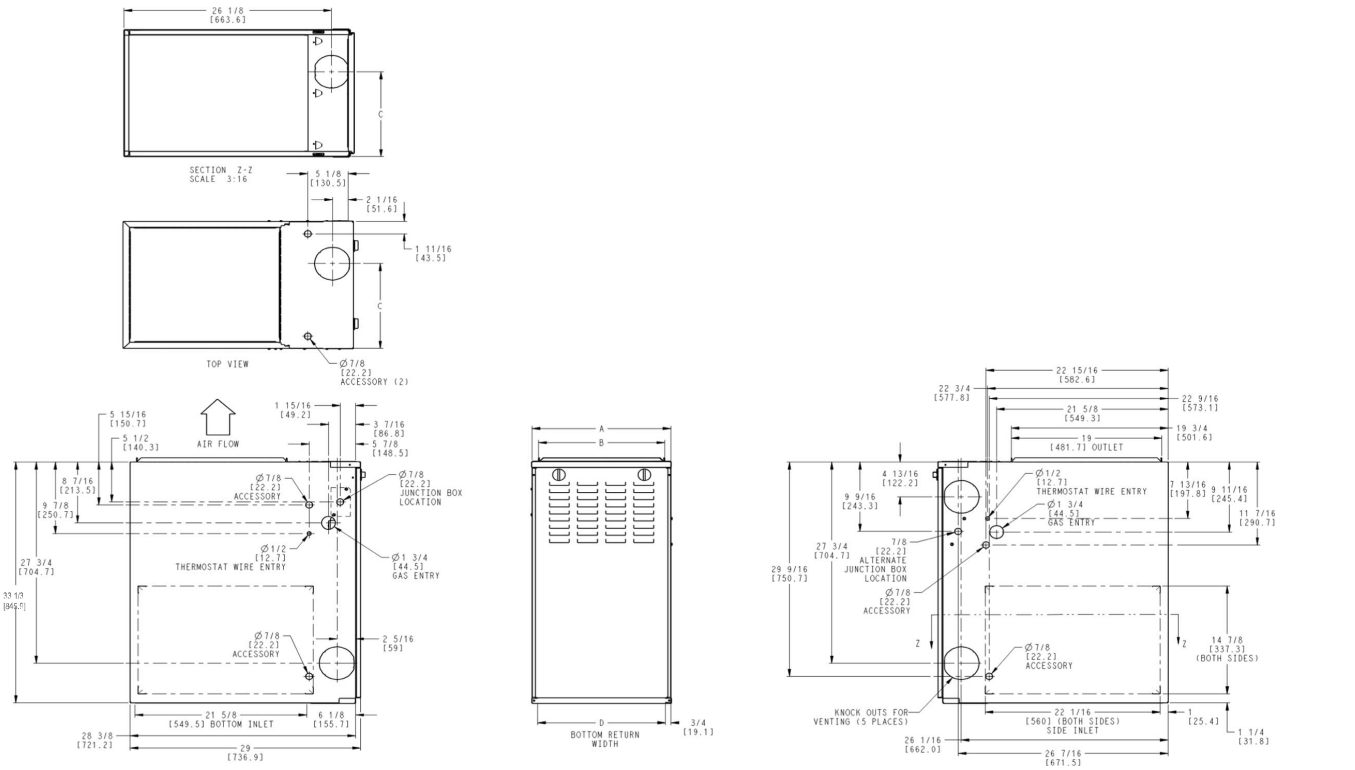

A190084

Fig. 1 – Dimensional Drawing

Table 1 – Dimensions

FURNACE SIZE	A	B	C	D	VENT CONNECTION SIZE	SHIP WT. LB (KG)
	CABINET WIDTH	OUTLET WIDTH	TOP AND BOTTOM FLUE COLLAR	BOTTOM INLET WIDTH		
045V14--12	14-3/16 (360)	12-9/16 (319)	9-5/16 (237)	12-11/16 (322)	4 (102)	111 (50.3)
070V14--12	14-3/16 (360)	12-9/16 (319)	9-5/16 (237)	12-11/16 (322)	4 (102)	118 (53.5)
070V17--16	17-1/2 (445)	15-7/8 (403)	11-9/16 (294)	16 (406)	4 (102)	129 (58.5)
090V17--16	17-1/2 (445)	15-7/8 (403)	11-9/16 (294)	16 (406)	4 (102)	134 (60.8)
090V21--20	21 (533)	19-3/8 (492)	13-5/16 (338)	19-1/2 (495)	4 (102)	149 (67.6)
110V21--22	21 (533)	19-3/8 (492)	13-5/16 (338)	19-1/2 (495)	4 (102)	155 (70.3)
135V24--22	24-1/2 (622)	22-7/8 (581	15-1/16 (383)	23 (584)	4 (102)*	170 (77.1)

*. 135 size furnaces require a 5 or 6-in. (127 or 152 mm) vent. Use a vent adapter between furnace and vent stack. See Installation Instructions for complete installation requirements.

⚠ WARNING

CARBON MONOXIDE POISONING HAZARD

Failure to follow this warning could result in personal injury and/or death.

Carbon Monoxide (CO) is a colorless, odorless, and tasteless poisonous gas that can be fatal when inhaled. Follow all installation, maintenance, and service instructions. See additional information below regarding the installation of a CO Alarm.

Most states in the USA and jurisdictions in Canada have laws that require the use of Carbon Monoxide (CO) alarms with fuel burning products. Examples of fuel burning products are furnaces, boilers, space heaters, generators, water heaters, stoves/ranges, clothes dryers, fireplaces, incinerators, automobiles, and other internal combustion engines. Even if there are no laws in your jurisdiction requiring a CO Alarm, it's highly recommended that whenever any fuel burning product is used in or around the home or business that the dwelling be equipped with a CO Alarm(s). The Consumer Product Safety Commission recommends the use of CO Alarm(s). The CO Alarm(s) must be installed, operated, and maintained according to the CO Alarm manufacturer's instructions. For more information about Carbon Monoxide, local laws, or to purchase a CO Alarm online, please visit the following website. https://www.kidde.com.

SAFETY CONSIDERATIONS

⚠ WARNING

FIRE, INJURY, OR DEATH HAZARD

Failure to follow this warning could result in property damage, personal injury, or death.

This furnace was manufactured to operate with natural gas. When fuel supply is Liquid Propane (LP), this furnace must be converted with a factory approved LP conversion kit. See furnace rating plate for approved conversion kit.

⚠ WARNING

FIRE, EXPLOSION, ELECTRICAL SHOCK, AND CARBON MONOXIDE POISONING HAZARD

Failure to follow this warning could result in dangerous operation, personal injury, death, or property damage.

Improper installation, adjustment, alteration, service, maintenance, or use can cause carbon monoxide poisoning, explosion, fire, electrical shock, or other conditions which may cause personal injury or property damage. Consult a qualified service agency, local gas supplier, or your distributor or branch for information or assistance. The qualified service agency must use only factory-authorized accessories and replacement parts when installing and servicing this product.

⚠ CAUTION

FURNACE RELIABILITY HAZARD

Failure to follow this caution may result in unit component damage.

Application of this furnace should be indoors with special attention given to vent sizing and material, gas input rate, air temperature rise, unit leveling, and unit sizing.

⚠ WARNING

FIRE, EXPLOSION, ELECTRICAL SHOCK, AND CARBON MONOXIDE POISONING HAZARD

Failure to follow this warning could result in dangerous operation, personal injury, death, or property damage.

Furnaces shall NOT be twinned (i.e. tandem or staged operation) unless approved in factory technical specifications literature for the furnace. A factory authorized, field-supplied Twinning Kit MUST be used. Consult furnace pre-sale literature for specific models approved for twinning and the correct twinning kit. Twinned furnaces must be installed on both a common supply AND a common return duct system as shown in the Twinning Kit Installation Instructions. Only two furnaces can be twinned on a common supply and return duct system using a factory authorized twinning kit.

Installing and servicing heating equipment can be hazardous due to gas and electrical components. Only trained and qualified personnel should install, repair, or service heating equipment. Untrained personnel can perform basic maintenance functions such as cleaning and replacing air filters. All other operations must be performed by trained service personnel. When working on heating equipment, observe precautions in literature, on tags, and on labels attached to or shipped with furnace and other safety precautions that may apply.

These instructions cover minimum requirements and conform to existing national standards and safety codes. In some instances, these instructions exceed certain local codes and ordinances, especially those that may not have kept up with changing residential construction practices. We require these instructions as a minimum for a safe installation.

⚠ CAUTION

CUT HAZARD

Failure to follow this caution may result in personal injury.

Sheet metal parts may have sharp edges or burrs. Use care and wear appropriate protective clothing, safety glasses and gloves when handling parts, and servicing furnaces.

⚠ WARNING

FIRE, INJURY, OR DEATH HAZARD

Failure to follow this warning could result in property damage, personal injury, or death.

Do not bypass any of the safety controls in the furnace, including but not limited to the main limit switch, rollout or burner thermal switch, and pressure switch/pressure transducer.

⚠ WARNING

PERSONAL INJURY AND PROPERTY DAMAGE HAZARD

Failure to follow this warning could result in property damage, personal injury, or death.

For continued performance, reliability, and safety, the only approved accessories and replacement parts are those specified by the equipment manufacturer. The use of non-manufacturer approved parts and accessories could invalidate the equipment limited warranty and result in fire risk, equipment malfunction, and failure. Please review manufacturer's instructions and replacement part catalogs available from your equipment supplier

Wear safety glasses, protective clothing and work gloves. Have fire extinguisher available during start-up and adjustment procedures and service calls.

This is the safety-alert symbol ⚠. When you see this symbol on the furnace and in instructions or manuals, be alert to the potential for personal injury.

Understand the signal words DANGER, WARNING, and CAUTION. These words are used with the safety-alert symbol. DANGER identifies the most serious hazards which will result in severe personal injury or death. WARNING signifies a hazard which could result in personal injury or death. CAUTION is used to identify hazards which may result in minor personal injury or product and property damage. NOTE is used to highlight suggestions which will result in enhanced installation, reliability, or operation.

The following additional safety considerations should be followed for gas furnaces:

1. Use only with type of gas approved for this furnace. Refer to the furnace rating plate.
2. Install this furnace only in a location and position as specified in the “Location” section of these instructions.
3. Provide adequate combustion and ventilation air to the furnace space as specified in “Air for Combustion and Ventilation” section.
4. Combustion products must be discharged outdoors. Connect this furnace to an approved vent system only, as specified in the “Venting” section of these instructions.

5. Never test for gas leaks with an open flame. Use a commercially available soap solution made specifically for the detection of leaks to check all connections, as specified in the “Gas Piping” section.
6. Always install furnace to operate within the furnace’s intended temperature-rise range with a duct system which has an external static pressure within the allowable range, as specified in the “Start-Up, Adjustments, and Safety Check” section. See furnace rating plate.
7. When a furnace is installed so that supply ducts carry air circulated by the furnace to areas outside the space containing the furnace, the return air shall also be handled by duct(s) sealed to the furnace casing and terminating outside the space containing the furnace. See “Air Ducts” section.
8. A gas-fired furnace for installation in a residential garage must be installed as specified in the warning box in the “Location” section.
9. The furnace may be used for construction heat provided that the furnace installation and operation complies with the first CAUTION in the LOCATION section of these instructions.
10. These Multipoise Gas-Fired Furnaces are CSA (formerly A.G.A. and C.G.A.) design-certified for use with natural and propane gases (see furnace rating plate) and for installation in alcoves, attics, basements, closets, utility rooms, crawlspaces, and garages. The furnace is factory-shipped for use with natural gas. A CSA (A.G.A. and C.G.A.) listed accessory gas conversion kit is required to convert furnace for use with propane gas.
11. See Fig. 2 for required clearances to combustible construction.
12. Maintain a 1-in. (25 mm) clearance from combustible materials to supply air ductwork for a distance of 36 in. (914 mm) horizontally from the furnace. See NFPA 90B or local code for further requirements.
13. These furnaces SHALL NOT be installed directly on carpeting, tile, or any other combustible material other than wood flooring. In downflow installations, factory accessory floor base **MUST** be used when installed on combustible materials and wood flooring. Special base is not required when this furnace is installed on manufacturer’s cased evaporator coils or when manufacturer’s evaporator coil casing is used, see Fig. 2 for clearance to combustible construction information.

INTRODUCTION

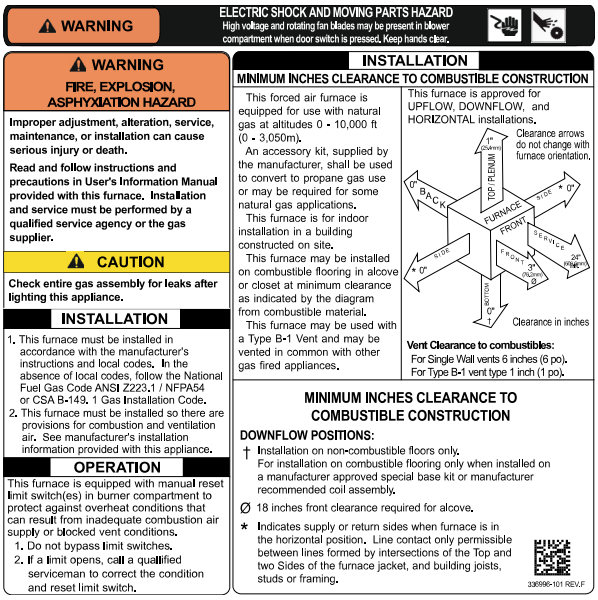

A220231

Fig. 2 – Clearances to Combustibles

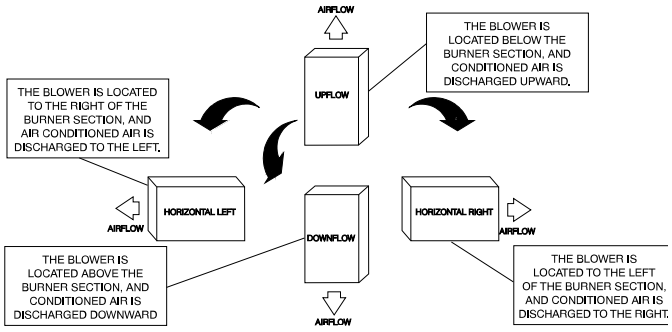

A02097

Fig. 3 – Multipoise Orientations

This 4-way multipoise Category I fan-assisted furnace is CSA (formerly A.G.A. and C.G.A.) design-certified. A Category I fan-assisted furnace is an appliance equipped with an integral mechanical means to either draw or force products of combustion through the combustion chamber and/or heat exchanger. The furnace is factory-shipped for use with natural gas. This furnace is not approved for installation in mobile homes, recreational vehicles, or outdoors.

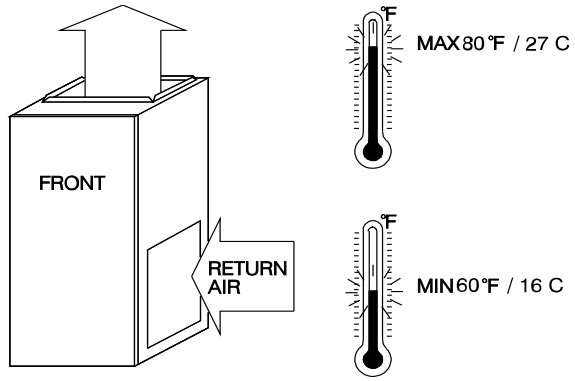

A06745

Fig. 4 – Return Air Temperature

This furnace is designed for minimum continuous return-air temperature of 60°F (15°C) db or intermittent operation down to 55°F (13°C)db such as when used with a night setback thermostat. Return-air temperature must not exceed 80°F (27°C) db. Failure to follow these return-air temperature limits may affect reliability of heat exchangers, motors, and controls, see Fig. 4.

For accessory installation details, refer to the applicable instruction literature.

NOTE: Remove all shipping brackets and materials before operating the furnace.

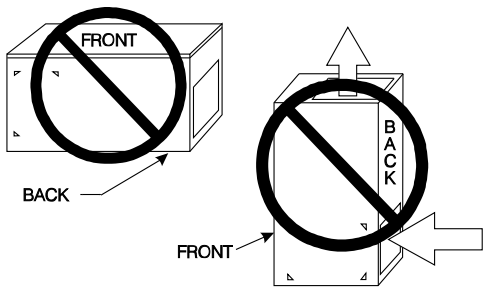

A02054

Fig. 5 – Prohibit Installation on Back

⚠ WARNING

FIRE, INJURY OR DEATH HAZARD

Failure to follow this warning could result in personal injury, death and/or property damage.

When the furnace is installed in a residential garage, the burners and ignition sources must be located at least 18 in. (457 mm) above the floor. The furnace must be located or protected to avoid damage by vehicles. When the furnace is installed in a public garage, airplane hangar, or other building having a hazardous atmosphere, the furnace must be installed in accordance with the NFPA 54/ANSI Z223.1, see Fig. 6.

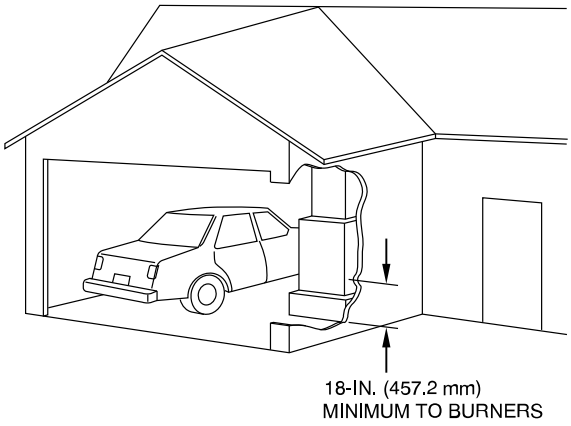

A93044

Fig. 6 – Installation in a Garage

CODES AND STANDARDS

Follow all national and local codes and standards in addition to these instructions. The installation must comply with regulations of the serving gas supplier, local building, heating, plumbing, and other codes. In absence of local codes, the installation must comply with the national codes listed below and all authorities having jurisdiction.

In the United States, follow all codes and standards for the following:

Safety

NFPA 54/ANSI Z223.1 and the Installation Standards, Warm Air Heating and Air Conditioning Systems ANSI/NFPA 90B.

General Installation

Current edition of the NFPA 54/ANSI Z223 and the NFPA 90B. For copies, contact the National Fire Protection Association Inc., Batterymarch Park, Quincy, MA 02269; (www.NFPA.org) or for only the NFPA 54/ANSI Z223, contact the American Gas Association, 400 N. Capitol Street, N.W., Washington, DC 20001 (www.AGA.org.).

Combustion and Ventilation Air

Current edition of NFPA 54/ANSI Z223.1 Section 9.3, Air for Combustion and Ventilation.

Duct Systems

Air Conditioning Contractors Association (ACCA) Manual D, Sheet Metal and Air Conditioning Contractors National Association (SMACNA), or American Society of Heating, Refrigeration, and Air Conditioning Engineers (ASHRAE) 2001 Fundamentals Handbook Chapter 35 or 2005 HVAC Systems and Equipment Handbook Chapters 9 and 16.

Acoustical Lining and Fibrous Glass Duct

Current edition of SMACNA and NFPA 90B as tested by UL Standard 181 for Class I Rigid Air Ducts

Gas Piping and Gas Pipe Pressure Testing

NFPA 54/ANSI Z223.1; Chapters 5, 6, and 7 and National Plumbing Codes.

Electrical Connections

National Electrical Code (NEC) ANSI/NFPA70.

Venting

NFPA 54/ANSI Z223.1; Chapters 12 and 13.

ELECTROSTATIC DISCHARGE (ESD) PRECAUTIONS PROCEDURE

1. Disconnect all power to the furnace. Multiple disconnects may be required. DO NOT TOUCH THE CONTROL OR ANY WIRE CONNECTED TO THE CONTROL PRIOR TO DISCHARGING YOUR BODY'S ELECTROSTATIC CHARGE TO GROUND.

⚠ CAUTION

FURNACE RELIABILITY HAZARD

Failure to follow this caution may result in unit component damage.

Electrostatic discharge can affect electronic components. Take precautions during furnace installation and servicing to protect the furnace electronic control. Precautions will prevent electrostatic discharges from personnel and hand tools which are held during the procedure. These precautions will help to avoid exposing the control to electrostatic discharge by putting the furnace, the control, and the person at the same electrostatic potential.

2. Firmly touch the clean, unpainted, metal surface of the furnace chassis which is close to the control. Tools held in a person's hand during grounding will be satisfactorily discharged.
3. After touching the chassis, you may proceed to service the control or connecting wires as long as you do nothing to recharge your body with static electricity (for example; DO NOT move or shuffle your feet, do not touch ungrounded objects, etc.).
4. If you touch ungrounded objects (and recharge your body with static electricity), firmly touch a clean, unpainted metal surface of the furnace again before touching control or wires.
5. Use this procedure for installed and uninstalled (ungrounded) furnaces.
6. Before removing a new control from its container, discharge your body's electrostatic charge to ground to protect the control from damage. If the control is to be installed in a furnace, follow items 1 through 4 before bringing the control or yourself in contact with the furnace. Put all used and new controls into containers before touching ungrounded objects.
7. An ESD service kit (available from commercial sources) may also be used to prevent ESD damage.

LOCATION

GENERAL

This multipoise furnace is shipped in packaged configuration. Some assembly and modifications are required when used in any of the four applications (shown in Fig. 3).

This furnace must:

- be installed so the electrical components are protected from water.
- not be installed directly on any combustible material other than wood flooring (refer to SAFETY CONSIDERATIONS).
- be located close to the chimney or vent and attached to an air distribution system. Refer to Air Ducts section.

- be provided ample space for servicing and cleaning. Always comply with minimum fire protection clearances shown on the furnace clearance to combustible construction label.

The following types of furnace installations may require OUTDOOR AIR for combustion due to chemical exposures:

- Commercial buildings
- Buildings with indoor pools
- Laundry rooms
- Hobby or craft rooms, and
- Chemical storage areas

If air is exposed to the following substances, it should not be used for combustion air, and outdoor air may be required for combustion:

- Permanent wave solutions
- Chlorinated waxes and cleaners
- Chlorine based swimming pool chemicals
- Water softening chemicals
- De-icing salts or chemicals
- Carbon tetrachloride
- Halogen type refrigerants
- Cleaning solvents (such as perchloroethylene)
- Printing inks, paint removers, varnishes, etc.
- Hydrochloric acid
- Cements and glues
- Antistatic fabric softeners for clothes dryers
- Masonry acid washing materials

All fuel-burning equipment must be supplied with air for fuel combustion. Sufficient air must be provided to avoid negative pressure in the equipment room or space. A positive seal must be made between the furnace cabinet and the return-air duct to prevent pulling air from the burner area and from draft safeguard opening.

⚠ WARNING

FIRE HAZARD

Failure to follow this warning could result in personal injury, death and/or property damage.

Do not install the furnace on its back or hang furnace with control compartment facing downward. Safety control operation will be adversely affected. Never connect return-air ducts to the back of the furnace, see Fig. 5.

LOCATION RELATIVE TO COOLING EQUIPMENT

The cooling coil must be installed parallel with, or on the downstream side of the unit to avoid condensation in the heat exchangers. When installed parallel with the furnace, dampers or other flow control must prevent chilled air from entering the furnace. If the dampers are manually operated, they must be equipped with means to prevent operation of either unit unless the damper is in the full-heat or full-cool position.

⚠ CAUTION

PERSONAL INJURY AND/OR PROPERTY DAMAGE HAZARD

Improper use or installation of this furnace may result in premature furnace component failure. This gas furnace may be used for heating buildings under construction provided that:

- The furnace is permanently installed with all electrical wiring, piping, venting and ducting installed according to these installation instructions. A return air duct is provided, sealed to the furnace casing, and terminated outside the space containing the furnace. This prevents a negative pressure condition as created by the circulating air blower, causing a flame rollout and/or drawing combustion products into the structure.
- The furnace is controlled by a thermostat. It may not be “hot wired” to provide heat continuously to the structure without thermostatic control.
- Clean outside air is provided for combustion. This is to minimize the corrosive effects of adhesives, sealers and other construction materials. It also prevents the entrainment of drywall dust into combustion air, which can cause fouling and plugging of furnace components.
- The temperature of the return air to the furnace is maintained between 55°F (13°C) and 80°F (27°C), with no evening setback or shutdown. The use of the furnace while the structure is under construction is deemed to be intermittent operation per our installation instructions.
- The air temperature rise is within the rated rise range on the furnace rating plate, and the gas input rate has been set to the nameplate value.
- The filters used to clean the circulating air during the construction process must be either changed or thoroughly cleaned prior to occupancy.
- The furnace, ductwork and filters are cleaned as necessary to remove drywall dust and construction debris from all HVAC system components after construction is completed.
- Verify proper furnace operating conditions including ignition, gas input rate, air temperature rise, and venting according to these installation instructions.

⚠ CAUTION

CARBON MONOXIDE POISONING / COMPONENT DAMAGE HAZARD

Failure to follow this warning could result in personal injury or death and unit component damage.

Corrosive or contaminated air may cause failure of parts containing flue gas, which could leak into the living space. Air for combustion must not be contaminated by halogen compounds, which include fluoride, chloride, bromide, and iodide. These elements can corrode heat exchangers and shorten furnace life. Air contaminants are found in aerosol sprays, detergents, bleaches, cleaning solvents, salts, air fresheners, and other household products. Do not install furnace in a corrosive or contaminated atmosphere. Make sure all combustion and circulating air requirements are met, in addition to all local codes and ordinances.

⚠ CAUTION

FURNACE CORROSION HAZARD

Failure to follow this caution may result in furnace damage.

Air for combustion must not be contaminated by halogen compounds, which include fluoride, chloride, bromide, and iodide. These elements can corrode heat exchangers and shorten furnace life. Air contaminants are found in aerosol sprays, detergents, bleaches, cleaning solvents, salts, air fresheners, and other household products.

AIR FOR COMBUSTION AND VENTILATION

Provisions for adequate combustion, ventilation, and dilution air must be provided in accordance with:

- U.S. Installations: Current edition of NFPA 54/ANSI Z223.1 Section 9.3, Air for Combustion and Ventilation and applicable provisions of the local building codes.

⚠ CAUTION

CARBON MONOXIDE POISONING HAZARD

Failure to follow this warning could result in personal injury or death.

The operation of exhaust fans, kitchen ventilation fans, clothes dryers, attic exhaust fans or fireplaces could create a NEGATIVE PRESSURE CONDITION at the furnace. Make-up air **MUST** be provided for the ventilation devices, in addition to that required by the furnace. Refer to the Carbon Monoxide Poisoning Hazard warning in the venting section of these instructions to determine if an adequate amount of make-up air is available.

The requirements for combustion and ventilation air depend upon whether or not the furnace is located in a space having a volume of at least 50 cubic feet per 1,000 BTUh input rating for all gas appliances installed in the space.

- Spaces having less than 50 cubic feet per 1,000 BTUh require the OUTDOOR COMBUSTION AIR METHOD.
- Spaces having at least 50 cubic feet per 1,000 BTUh may use the INDOOR COMBUSTION AIR, STANDARD or KNOWN AIR INFILTRATION METHOD.

Outdoor Combustion Air Method

1. Provide the space with sufficient air for proper combustion, ventilation, and dilution of flue gases using permanent horizontal or vertical duct(s) or opening(s) directly communicating with the outdoors or spaces that freely communicate with the outdoors.
2. Fig. 7 illustrates how to provide TWO OUTDOOR OPENINGS, one inlet and one outlet combustion and ventilation air opening, to the outdoors.
   a. One opening **MUST** commence within 12 in. (300 mm) of the ceiling and the second opening **MUST** commence within 12 in. (300 mm) of the floor.
   b. Size openings and ducts per Fig. 7 and Table 1.
   c. TWO HORIZONTAL DUCTS require 1 sq. in. (645 sq. mm) of free area per 2,000 BTUh (1,100 mm^2/kW) of combined input for all gas appliances in the space per Fig. 7 and Table 1.
   d. TWO OPENINGS OR VERTICAL DUCTS require 1 sq. in. (645 sq. mm) of free area per 4,000 BTUh (550 mm^2/kW) for combined input of all gas appliances in the space per Fig. 7 and Table 1.
3. ONE OUTDOOR OPENING requires:
   a. 1 sq. in. (645 sq. mm) of free area per 3,000 BTUh (734 mm^2/kW) for combined input of all gas appliances in the space per Table 1 and
   b. Not less than the sum of the areas of all vent connectors in the space.

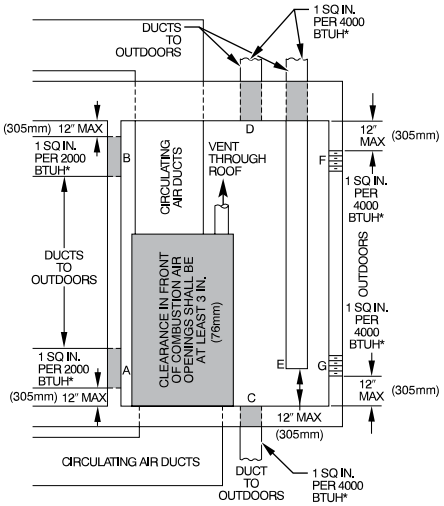

* Minimum dimensions of 3-in. (76 mm).

NOTE: Use any of the following combinations of openings: A & B C & D D & E F & G

A03174

Fig. 7 – Air for Combustion, Ventilation, and Dilution for Outdoors

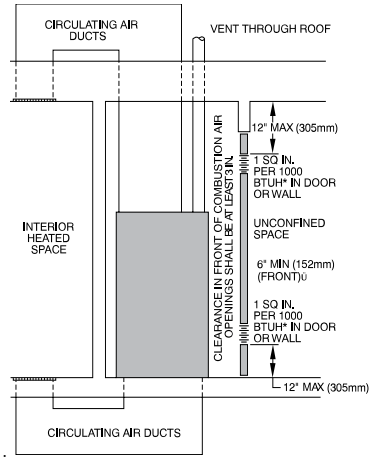

* Minimum opening size is 100 sq in. (64516 sq. mm) with minimum dimensions of 3 in. (76 mm)

† Minimum of 3 in. (76 mm) when type-B1 vent is used.

A03175

Fig. 8 – Air for Combustion, Ventilation, and Dilution from Indoors

The opening shall commence within 12 in. (300 mm) of the ceiling. Appliances in the space shall have clearances of at least 1 in. (25 mm) from the sides and back and 6 in. (150 mm) from the front. The opening shall directly communicate with the outdoors or shall communicate through a vertical or horizontal duct to the outdoors or spaces (crawl or attic) that freely communicate with the outdoors.

Indoor Combustion Air - NFPA & AGA Standard and Known-Air-Infiltration Rate Methods

Indoor air is permitted for combustion, ventilation, and dilution, if the **Standard** or **Known-Air-Infiltration** Method is used.

⚠ WARNING

CARBON MONOXIDE POISONING HAZARD

Failure to follow this warning could result in personal injury or death.

Many homes require air to be supplied from outdoors for furnace combustion, ventilation, and dilution of flue gases.

The furnace combustion air supply must be provided in accordance with this instruction manual.

Table 2 – Minimum Free Area Required for Each Combustion Air opening of Duct to Outdoors

FURNACE INPUT (BTUH)	TWO HORIZONTAL DUCTS (1 SQ. IN./2,000 BTUH) (1,100 SQ. MM/KW)		SINGLE DUCT OR OPENING (1 SQ. IN./3,000 BTUH) (734 SQ. MM/KW)		TWO OPENINGS OR VERTICAL DUCTS (1 SQ. IN./4,000 BTUH) (550 SQ. MM/KW)	
	Free Area of Opening and Duct Sq. In. (Sq. mm)	Round Duct Dia. In. (mm)	Free Area of Opening and Duct Sq. In. (Sq. mm)	Round Duct Dia. In. (mm)	Free Area of Opening and Duct Sq. In. (Sq. mm)	Round Duct Dia. In. (mm)
44,000	22 (14194)	6 (152)	14.7 (9484)	5 (127)	11 (7096)	4 (102)
66,000	33 (21290)	7 (178)	22 (14193)	6 (152)	16.5 (10645)	5 (127)
88,000	44 (28387)	8 (203)	29.3 (18903)	7 (178)	22 (14193)	6 (152)
110,000	55 (35484)	9 (229)	36.7 (23677)	7 (178)	27.5 (17742)	6 (152)
132,000	66 (42580)	10 (254)	44 (28387)	8 (203)	33 (21290)	7 (178)
154,000	77 (49677)	10 (254)	51.3 (33096)	9 (229)	38.5 (24839)	8 (203)

NOTE: Not all models have these sizes.

EXAMPLES: Determining Free Area

FURNACE		WATER HEATER		TOTAL INPUT		
110,000	+	30,000	=	(140,000 divided by 4,000)	=	35.0 Sq. In. for each two Vertical Ducts or Openings
66,000	+	40,000	=	(106,000 divided by 3,000)	=	35.3 Sq. In. for a Single Duct or Opening
88,000	+	30,000	=	(118,000 divided by 2,000)	=	59.0 Sq. In. for each of two Horizontal Ducts

Table 3 – Minimum Space Volumes for 100% Combustion, Ventilation, and Dilution from Indoors

ACH	OTHER THAN FAN-ASSISTED TOTAL (1,000'S BTUH GAS INPUT RATE)			FAN-ASSISTED TOTAL (1,000'S BTUH GAS INPUT RATE)					
	30	40	50	44	66	88	110	132	154
	Space Volume Ft^3 (M^3)								
0.60	1,050 (29.7)	1,400 (39.6)	1,750 (49.5)	1,100 (31.1)	1,650 (46.7)	2,200 (62.2)	2,750 (77.8)	3,300 (93.4)	3,850 (109.0)
0.50	1,260 (35.6)	1,680 (47.5)	2,100 (59.4)	1,320 (37.3)	1,980 (56.0)	2,640 (74.7)	3,300 (93.4)	3,960 (112.1)	4,620 (130.8)
0.40	1,575 (44.5)	2,100 (59.4)	2,625 (74.3)	1,650 (46.7)	2,475 (70.0)	3,300 (93.4)	4,125 (116.8)	4,950 (140.1)	5,775 (163.5)
0.30	2,100 (59.4)	2,800 (79.2)	3,500 (99.1)	2,200 (62.2)	3,300 (93.4)	4,400 (124.5)	5,500 (155.7)	6,600 (186.8)	7,700 (218.0)
0.20	3,150 (89.1)	4,200 (118.9)	5,250 (148.6)	3,300 (93.4)	4,950 (140.1)	6,600 (186.8)	8,250 (233.6)	9,900 (280.3)	11,550 (327.0)
0.10	6,300 (178.3)	8,400 (237.8)	10,500 (297.3)	6,600 (186.8)	9,900 (280.3)	13,200 (373.7)	16,500 (467.2)	19,800 (560.6)	23,100 (654.1)
0.00	NP	NP	NP	NP	NP	NP	NP	NP	NP

NP = Not Permitted

NOTE: Not all models have these sizes.

The Standard Method

Use the **Standard Method** if:

1. The space has no less volume than 50 cubic feet per 1,000 BTUh of the maximum input ratings for all gas appliances installed in the space and
2. The air infiltration rate is not known to be less than 0.40 air changes per hour (ACH).

Use the **Known Air Infiltration Rate Method** if the infiltration rate is known to be:

1. Less than 0.40 ACH and
2. Equal to or greater than 0.10 ACH

Infiltration rates greater than 0.60 ACH shall not be used. The minimum required volume of the space varies with the number of ACH and shall be determined per Table 3 or Equations 1 and 2. Determine the minimum required volume for each appliance in the space and add the volumes together to get the total minimum required volume for the space.

Table 3 - Minimum Space Volumes were determined by using the following equations from the National Fuel Gas Code ANSI Z223.1/NFPA 54, 9.3.2.2:

1. For other than fan-assisted appliances, such as a draft hood-equipped water heater:

$$\text{Volume}_{\text{Other}} = \frac{21\text{ft}^3}{\text{ACH}}\left(\frac{I_{\text{other}}}{1000\ \text{Btu/hr}}\right)$$

A04002

2. For fan-assisted appliances such as this furnace:

$$\text{Volume}_{\text{Fan}} = \frac{15\text{ft}^3}{\text{ACH}}\left(\frac{I_{\text{fan}}}{1000\ \text{Btu/hr}}\right)$$

A04003

If the following is applied to either equation:

- I_{other} = combined input of all other than fan-assisted appliances in BTUh/hr
- I_{fan} = combined input of all fan-assisted appliances in BTUh/hr
- ACH = air changes per hour (ACH shall not exceed 0.60.)

Then the following requirements apply to the **Standard Method** and to the **Known Air Infiltration Rate Method**.

1. Adjoining rooms can be considered part of a space if:
   a. There are no closeable doors between rooms.
   b. Combining spaces on same floor level. Each opening shall have free area of at least 1 $in.^2$/1,000 BTUh (2,000 mm^2/kW) of the total input rating of all gas appliances in the space, but not less than 100 $in.^2$ (0.06 m^2). One opening shall commence within 12 in. (300 mm) of the ceiling and the second opening shall commence within 12 in. (300 mm) of the floor. The minimum dimension of air openings shall be at least 3 in. (80 mm), see Fig. 8.
   c. Combining space on different floor levels. The volumes of spaces on different floor levels shall be considered as communicating spaces if connected by one or more permanent openings in doors or floors having free area of at least 2 $in.^2$/1,000 BTUh (4,400 mm^2/kW) of total input rating of all gas appliances
2. An attic or crawlspace may be considered a space that freely communicates with the outdoors provided there are adequate permanent ventilation openings directly to outdoors having free area of at least 1-$in.^2$/4,000 BTUh of total input rating for all gas appliances in the space.
3. In spaces that use the **Indoor Combustion Air Method**, infiltration should be adequate to provide air for combustion, permanent ventilation and dilution of flue gases. However, in buildings with unusually tight construction, additional air **MUST** be provided using the methods described in the **Outdoor Combustion Air Method** section.
4. Unusually tight construction is defined as Construction with:
   a. Walls and ceilings exposed to the outdoors have a continuous, sealed vapor barrier. Openings are gasketed or sealed and
   b. Doors and openable windows are weatherstripped and
   c. Other openings are caulked or sealed. These include joints around window and door frames, between sole plates and floors, between wall-ceiling joints, between wall panels, at penetrations for plumbing, electrical and gas lines, etc.

Combination of Indoor and Outdoor Air

1. Indoor openings shall comply with the Indoor Combustion Air Method below and,
2. Outdoor openings shall be located as required in the Outdoor Combustion Air Method mentioned previously and,
3. Outdoor openings shall be sized as follows:
   a. Calculate the Ratio of all Indoor Space volume divided by required volume for Indoor Combustion Air Method below.
   b. Outdoor opening size reduction Factor is 1 minus the Ratio in a. above.
   c. Minimum size of Outdoor openings shall be the size required in Outdoor Combustion Air Method above multiplied by reduction Factor in b. above. The minimum dimension of air openings shall be not less than 3 in. (80 mm).

INSTALLATION

UPFLOW INSTALLATION

Bottom Return Air Inlet

These furnaces are shipped with bottom closure panel installed in bottom return-air opening. Remove and discard this panel when bottom return air is used. To remove bottom closure panel, perform the following:

1. Tilt or raise furnace and remove 2 screws holding bottom filler panel, see Fig. 9.
2. Rotate bottom filler panel downward to release holding tabs.
3. Remove bottom closure panel.
4. Reinstall bottom filler panel and screws.

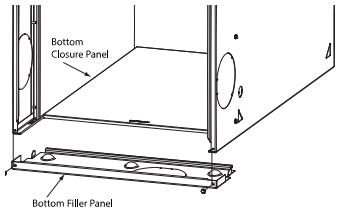

A10273

Fig. 9 – Removing Bottom Closure Panel

Side Return Air Inlet

These furnaces are shipped with bottom closure panel installed in bottom return-air opening. This panel **MUST** be in place when only side return air is used.

NOTE: Side return-air openings can be used in UPFLOW and most HORIZONTAL configurations. Do not use side return-air openings in DOWNFLOW configuration.

Leveling Legs (If Desired)

In upflow position with side return inlet(s), leveling legs may be used, see Fig. 10. Install field-supplied, 5/16 x 1-1/2 in. (8 x 38 mm) (max) corrosion-resistant machine bolts, washers and nuts.

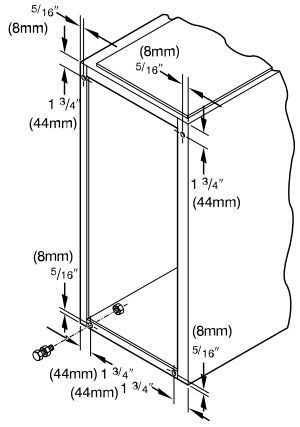

A89014

Fig. 10 – Leveling Legs

NOTE: Bottom closure must be used when leveling legs are used. It may be necessary to remove and reinstall bottom closure panel to install leveling legs. To remove bottom closure panel, see Item 1 in Bottom Return Air Inlet section in Step 1 above.

To install leveling legs:

1. Position furnace on its back. Locate and drill a hole in each bottom corner of furnace, see Fig. 10.
2. For each leg, install nut on bolt and then install bolt with nut in hole. (Install flat washer if desired.)
3. Install another nut on other side of furnace base. (Install flat washer if desired.)
4. Adjust outside nut to provide desired height, and tighten inside nut to secure arrangement.
5. Reinstall bottom closure panel if removed.

Downflow Installation

⚠ CAUTION

EQUIPMENT OR PROPERTY DAMAGE

Failure to follow this caution could result in equipment or property damage

When furnace is installed in a downflow application, make sure water lines and other sources of water cannot drip or fail in such a way that water can collect on the blower motor, wiring, and furnace control board.

NOTE: For downflow applications, this furnace is approved for use on combustible flooring when any one of the following 3 accessories are used:

- Manufacturer's approved downflow combustible floor subbase
- Manufacturer's approved cased evaporator coil
- Manufacturer's approved evaporator coil casing

1. Determine application being installed from Table 4.
2. Construct hole in floor, see Table 4 and Fig. 11.
3. Construct plenum to dimensions specified, see Table 4 and Fig. 11.
4. If downflow subbase is used, install as shown, see Fig. 12. If manufacturer's cased evaporator coil or coil casing is used, install as shown in, see Fig. 13.

NOTE: It is recommended that the perforated supply-air duct flanges be completely folded over or removed from furnace when installing the furnace on a factory-supplied cased coil or coil box. To remove the supply-air duct flange, use wide duct pliers or hand seamers to bend flange back and forth until it breaks off. Be careful of sharp edges. (Refer to Duct Flanges (Fig.16) in the "Air Ducts" section.)

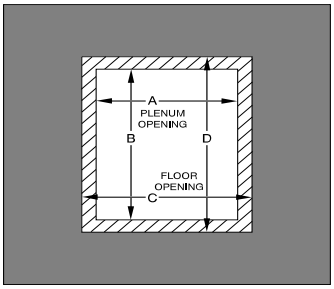

A96283

Fig. 11 – Floor and Plenum Opening Dimensions

Bottom Return Air Inlet

These furnaces are shipped with bottom closure panel installed in bottom return-air opening. Remove and discard this panel when bottom return air is used. To remove bottom closure panel, perform the following:

1. Tilt or raise furnace and remove 2 screws holding bottom filler panel, see Fig. 9.
2. Rotate bottom filler panel downward to release holding tabs.
3. Remove bottom closure panel.
4. Reinstall bottom filler panel and screws.

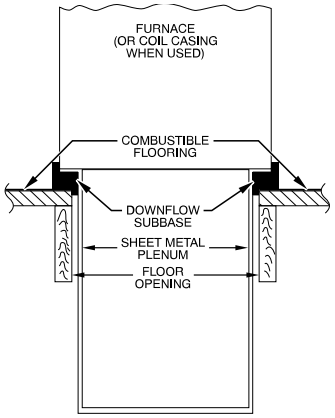

A96285

Fig. 12 – Furnace, Plenum, and Subbase Installed on a Combustible Floor

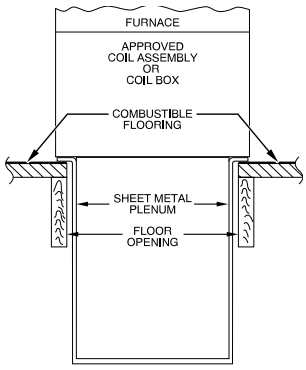

A08556

Fig. 13 – Furnace, Plenum, and Coil Assembly or Coil Box Installed on a Combustible Floor

Table 4 – Opening Dimensions - In. (mm)

FURNACE CASING WIDTH	APPLICATION	PLENUM OPENING		FLOOR OPENING	
		A	B	C	D
14–3/16 (360)	Upflow Applications on Combustible or Noncombustible Flooring (subbase not required)	12-11/16 (322)	21-5/8 (549)	13-5/16 (338)	22-1/4 (565)
	Downflow Applications on Noncombustible Flooring (subbase not required)	12-9/16 (319)	19 (483)	13-3/16 (335)	19-5/8 (498)
	Downflow applications on combustible flooring (subbase required)	11-13/16 (300)	19 (483)	13-7/16 (341)	20-5/8 (524)
	Downflow Applications on Combustible Flooring with coil assembly or coil box (subbase not required)	12-5/16 (313)	19 (483)	13-5/16 (338)	20 (508)
17–1/2 (445)	Upflow Applications on Combustible or Noncombustible Flooring (subbase not required)	16 (406)	21-5/8 (549)	16-5/8 (422)	22-1/4 (565)
	Downflow Applications on Noncombustible Flooring (subbase not required)	15-7/8 (403)	19 (483)	16-1/2 (419)	19-5/8 (498)
	Downflow applications on combustible flooring (subbase required)	15-1/8 (384)	19 (483)	16-3/4 (425)	20-5/8 (524)
	Downflow Applications on Combustible Flooring with coil assembly or coil box (subbase not required)	15-1/2 (394)	19 (483)	16-1/2 (419)	20 (508)

Table 4 – Opening Dimensions - In. (mm) (Continued)

21 (533)	Upflow Applications on Combustible or Noncombustible Flooring (subbase not required)	19-1/2 (495)	21-5/8 (549)	20-1/8 (511)	22-1/4 (565)
	Downflow Applications on Noncombustible Flooring (subbase not required)	19-3/8 (492)	19 (483)	20 (508)	19-5/8 (498)
	Downflow applications on combustible flooring (subbase required)	18-5/8 (473)	19 (483)	20-1/4 (514)	20-5/8 (524)
	Downflow Applications on Combustible Flooring with coil assembly or coil box (subbase not required)	19 (483)	19 (483)	20 (508)	20 (508)
24-1/2 (622)	Upflow Applications on Combustible or Noncombustible Flooring (subbase not required)	23 (584)	21-5/8 (549)	23-5/8 (600)	22-1/4 (565)
	Downflow Applications on Noncombustible Flooring (subbase not required)	22-7/8 (581)	19 (483)	23-1/2 (597)	19-5/8 (498)
	Downflow applications on Combustible flooring (subbase required)	22-1/8 (562)	19 (483)	23-3/4 (603)	20-5/8 (524)
	Downflow Applications on Combustible Flooring with coil assembly or coil box (subbase not required)	22-1/2 (572)	19 (483)	23-1/2 (597)	20 (508)

⚠ WARNING

FIRE, EXPLOSION, AND CARBON MONOXIDE POISONING HAZARD

Failure to follow this warning could result in personal injury, death, or property damage.

Do not install the furnace on its back or hang furnace with control compartment facing downward. Safety control operation will be adversely affected. Never connect return-air ducts to the back of the furnace.

Horizontal Installation

The furnace can be installed horizontally in an attic or crawlspace on either the left-hand (LH) or right-hand (RH) side. The furnace can be hung from floor joists, rafters or trusses or installed on a non-combustible platform, blocks, bricks or pad.

Suspended Furnace Support

The furnace may be supported under each end with threaded rod, angle iron or metal plumber's strap as shown, see Fig. 15 and Fig. 16. Secure angle iron to bottom of furnace as shown. Heavy-gauge sheet metal straps (plumber's straps) may be used to suspend the furnace from each bottom corner. To prevent screws from pulling out, use 2 #8 x 3/4 in. screws into the side and 2 #8 x in. screws in the bottom of the furnace casing for each strap, see Fig. 15 and Fig. 16.

If the screws are attached to ONLY the furnace sides and not the bottom, the straps must be vertical against the furnace sides and not pull away from the furnace sides, so that the strap attachment screws are not in tension (are loaded in shear) for reliable support.

Platform Furnace Support

Construct working platform at location where all required furnace clearances are met, see Fig. 2 and Fig. 14. For furnaces with 1-in. (25 mm) clearance requirement on side, set furnace on non-combustible blocks, bricks or angle iron. For crawlspace installations, if the furnace is not suspended from the floor joists, the ground underneath furnace must be level and the furnace set on blocks or bricks.

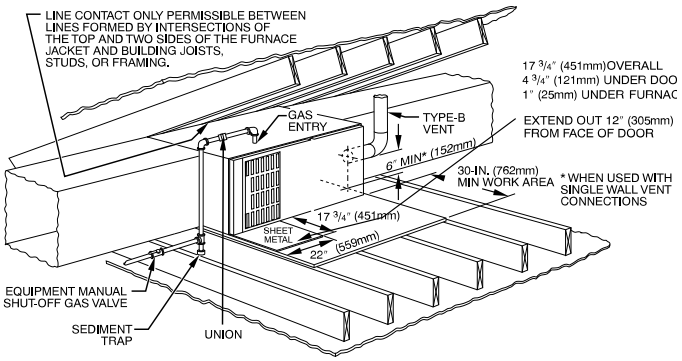

A10164

Fig. 14 – Typical Attic Installation

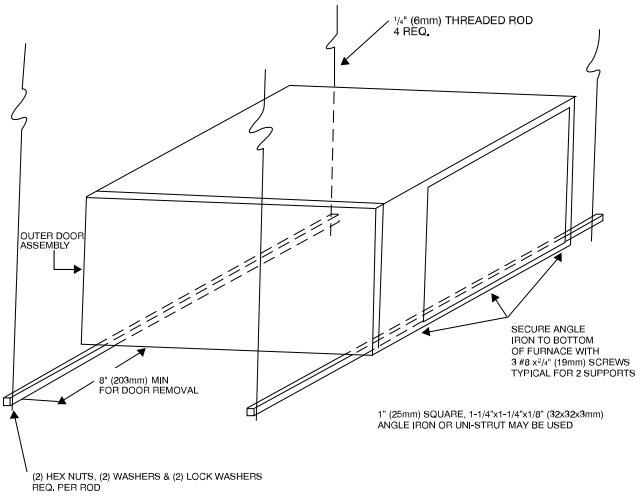

A10130

Fig. 15 – Horizontal Unit Suspension

Roll-Out Protection

Provide a minimum 17-3/4-in. X 22-in. (451 x 559 mm) piece of sheet metal for flame roll-out protection in front of burner area for furnaces closer than 12-in. (305 mm) above the combustible deck or suspended furnaces closer than 12-in. (305 mm) to joists. The sheet metal **MUST** extend underneath the furnace casing by 1-in. (25 mm) with the door removed.

The bottom closure panel on furnaces of widths 17-1/2-in. (445 mm) and larger may be used for flame roll-out protection when bottom of furnace is used for return air connection. See Fig. 14 for proper orientation of roll-out shield.

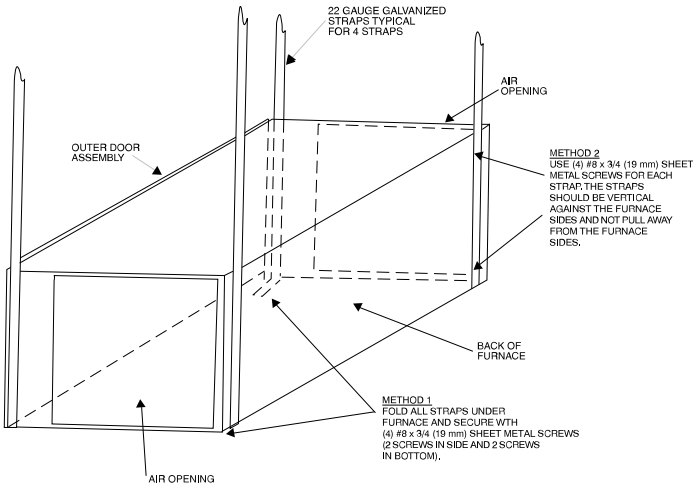

Fig. 16 – Horizontal Suspension with Straps

Bottom Return Air Inlet

These furnaces are shipped with bottom closure panel installed in bottom return-air opening. Remove and discard this panel when bottom return air is used. To remove bottom closure panel, perform the following:

1. Tilt or raise furnace and remove two screws holding bottom filler panel, see Fig. 9.
2. Rotate bottom filler panel downward to release holding tabs.
3. Remove bottom closure panel.
4. Reinstall bottom filler panel and screws.

Side Return Air Inlet

These furnaces are shipped with bottom closure panel installed in bottom return-air opening. This panel **MUST** be in place when side return air inlet(s) are used without a bottom return air inlet.

Not all horizontal furnaces are approved for side return air connections, see Fig. 18.

FILTER ARRANGEMENT

WARNING

CARBON MONOXIDE POISONING HAZARD

Failure to follow this warning could result in personal injury, or death.

Never operate a furnace without a filter or with filter access door removed.

There are no provisions for an internal filter rack in these furnaces. A field-supplied accessory external filter rack is required. Refer to the instructions supplied with the external filter rack for assembly and installation options.

AIR DUCTS

General Requirements

The duct system should be designed and sized according to accepted national standards such as those published by: Air Conditioning Contractors Association (ACCA), Sheet Metal and Air Conditioning Contractors National Association (SMACNA) or American Society of Heating, Refrigerating and Air Conditioning Engineers (ASHRAE) or consult *The Air Systems Design Guidelines* reference tables available from your local distributor. The duct system should be sized to handle the required system design CFM at the design external static pressure. The furnace airflow rates are provided in Table 10-Air Delivery-CFM (With Filter). When a furnace is installed so that the supply ducts carry air circulated by the furnace to areas outside the space containing the furnace, the return air shall also be handled by duct(s) sealed to the furnace casing and terminating outside the space containing the furnace.

Secure ductwork with proper fasteners for type of ductwork used. Seal supply- and return-duct connections to furnace with code approved tape or duct sealer.

NOTE: Flexible connections should be used between ductwork and furnace to prevent transmission of vibration.

Ductwork passing through unconditioned space should be insulated to enhance system performance. When air conditioning is used, a vapor barrier is recommended.

Maintain a 1-in. (25 mm) clearance from combustible materials to supply air ductwork for a distance of 36-in. (914 mm) horizontally from the furnace. See NFPA 90B or local code for further requirements.

Ductwork Acoustical Treatment

NOTE: Metal duct systems that do not have a 90 degree elbow and 10 ft. (3 M) of main duct to the first branch take-off may require internal acoustical lining. As an alternative, fibrous ductwork may be used if constructed and installed in accordance with the latest edition of SMACNA construction standard on fibrous glass ducts. Both acoustical lining and fibrous ductwork shall comply with NFPA 90B as tested by UL Standard 181 for Class 1 Rigid air ducts.

Supply Air Connections

For a furnace not equipped with a cooling coil, the outlet duct shall be provided with a removable access panel. This opening shall be accessible when the furnace is installed and shall be of such a size that the heat exchanger can be viewed for possible openings using light assistance or a probe can be inserted for sampling the air stream. The cover attachment shall prevent leaks.

Upflow and Horizontal Furnaces

Connect supply-air duct to flanges on furnace supply-air outlet. Bend flange upward to 90° with wide duct pliers, see Fig. 17. The supply-air duct must be connected to ONLY the furnace supply-outlet-air duct flanges or air conditioning coil casing (when used). DO NOT cut main furnace casing side to attach supply air duct, humidifier, or other accessories. All accessories **MUST** be connected to duct external to furnace main casing.

NOTE: For horizontal applications, the top most flange may be bent past 90° to allow the evaporator coil to hang on the flange temporarily while the remaining attachment and sealing of the coil are performed.

Downflow Furnaces

Connect supply-air duct to supply-air outlet on furnace. Bend flange inward past 90° with wide duct pliers (See Fig. 17). The supply-air duct must be connected to ONLY the furnace supply outlet or air conditioning coil casing (when used). When installed on combustible material, supply-air duct must be connected to ONLY the factory-approved accessory subbase, or a factory-approved air conditioning coil casing. DO NOT cut main furnace casing to attach supply side air duct, humidifier, or other accessories. All accessories **MUST** be connected to duct external to furnace casing.

Return Air Connections

WARNING

FIRE HAZARD

A failure to follow this warning could cause personal injury, death and/or property damage.

Never connect return-air ducts to the back of the furnace. Follow instructions below.

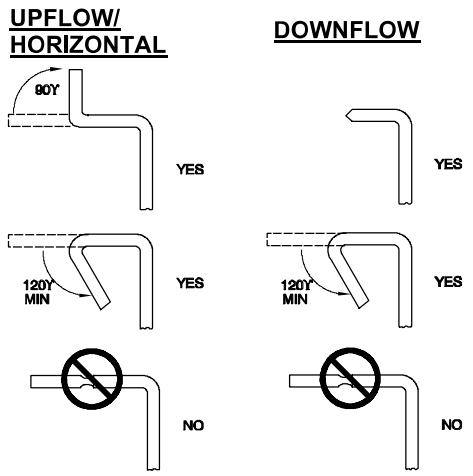

A190346

Fig. 17 – Duct Flanges

Downflow Furnaces

The return-air duct must be connected to return-air opening bottom inlet, see Fig. 1. DO NOT cut into casing sides (left or right). Side opening is permitted for only upflow and certain horizontal furnaces. Bypass humidifier connections should be made at ductwork or coil casing sides exterior to furnace, see Fig. 18.

Upflow and Horizontal Furnaces

The return-air duct must be connected to bottom, sides (left or right), or a combination of bottom and side(s) of main furnace casing, see Fig. 1. Bypass humidifier may be attached into unused return air side of the furnace casing, see Fig. 19 and Fig. 20. Not all upflow and horizontal furnace models are approved for side return air connections, see Fig. 19 and Fig. 20.

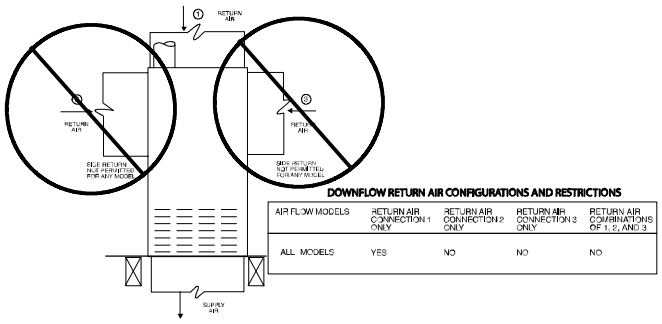

A190271

Fig. 18 – Downflow Return Air Configurations and Restriction

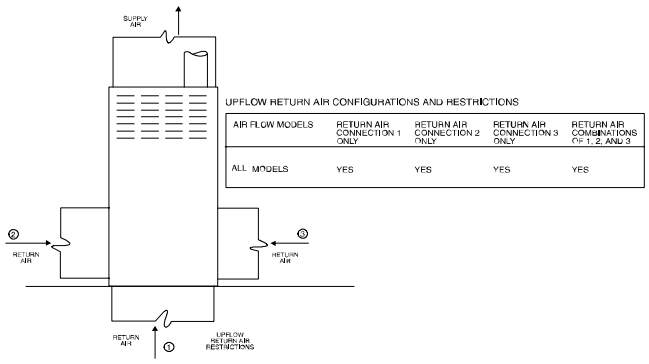

A190270

Fig. 19 – Upflow Return Air Configurations and Restrictions

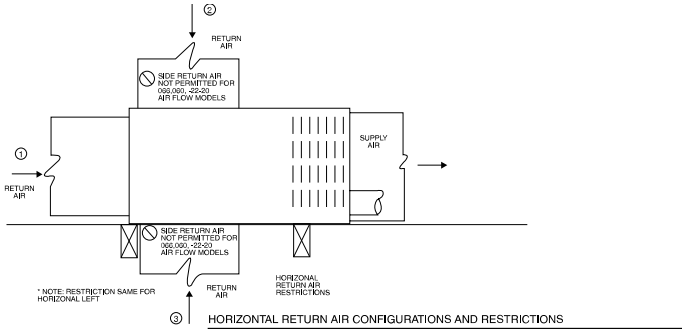

A02162

Fig. 20 – Horizontal Return Air Configurations and Restrictions

GAS PIPING

Gas piping must be installed in accordance with national and local codes. Refer to current edition of NFPA 54/ANSI Z223 in the U.S.

Installations must be made in accordance with all authorities having jurisdiction. If possible, the gas supply line should be a separate line running directly from meter to furnace.

NOTE: In the state of Massachusetts:

1. Gas supply connections **MUST** be performed by a licensed plumber or gas fitter.
2. When flexible connectors are used, the maximum length shall not exceed 36 in. (915 mm).
3. When lever handle type manual equipment shutoff valves are used, they shall be T-handle valves.
4. The use of copper tubing for gas piping is NOT approved by the state of Massachusetts.

⚠ WARNING

FIRE OR EXPLOSION HAZARD

Failure to follow this warning could result in personal injury, death, and/or property damage.

Never purge a gas line into a combustion chamber. Never test for gas leaks with an open flame. Use a commercially available soap solution made specifically for the detection of leaks to check all connections. A fire or explosion may result causing property damage, personal injury or loss of life.

⚠ WARNING

FIRE OR EXPLOSION HAZARD

Failure to follow this warning could result in personal injury, death, and/or property damage.

Use proper length of pipe to avoid stress on gas control manifold and gas valve.

⚠ WARNING

FIRE OR EXPLOSION HAZARD

Failure to follow this warning could result in personal injury, death, and/or property damage.

Gas valve inlet and/or inlet pipe must remain capped until gas supply line is permanently installed to protect the valve from moisture and debris. Also, install a sediment trap in the gas supply piping at the inlet to the gas valve.

Refer to Table 5 for recommended gas pipe sizing. Risers must be used to connect to furnace and to meter. Support all gas piping with appropriate straps, hangers, etc. Use a minimum of 1 hanger every 6 ft. (1.8 M). Joint compound (pipe dope) should be applied sparingly and only to male threads of joints. Pipe dope must be resistant to the action of propane gas.

Table 5 – Maximum Capacity of Pipe

Nominal:	1/2 (12.7)	3/4 (19.0)	1 (25.4)	1-1/4 (31.8)	1-1/2 (38.1)
Actual ID:	0.622	0.824	1.049	1.380	1.610
Length (ft)	Capacity in Cubic Feet of Gravity				
10 (3.0)	172	360	678	1390	2090
20 (6.0)	118	247	466	957	1430
30 (9.1)	95	199	374	768	1150
40 (12.1)	81	170	320	657	985
50 (15.2)	72	151	284	583	873

NOTE: Cubic ft. of natural gas per hr for gas pressures of 0.5 psig (14-in. w.c.) or less and a pressure drop of 0.5-in. w.c. (based on a 0.60 specific gravity gas). Ref: Chapter 6 current edition of NFPA 54/ANSI Z223.1.

⚠ WARNING

FIRE OR EXPLOSION HAZARD

A failure to follow this warning could result in personal injury, death, and/or property damage.

If local codes allow the use of a flexible gas appliance connector, always use a new listed connector. Do not use a connector which has previously served another gas appliance. Black iron pipe shall be installed at the furnace gas control valve and extend a minimum of 2-in. (51 mm) outside the furnace.

⚠ CAUTION

FURNACE DAMAGE HAZARD

Failure to follow this caution may result in furnace damage.

Connect gas pipe to furnace using a backup wrench to avoid damaging gas controls and burner misalignment.

An accessible manual equipment shutoff valve **MUST** be installed external to furnace casing and within 6 ft. (1.8 M) of furnace. A 1/8-in. (3 mm) NPT plugged tapping, accessible for test gauge connection, **MUST** be installed immediately upstream of gas supply connection to furnace and downstream of manual equipment shutoff valve.

NOTE: The furnace gas control valve inlet pressure tap connection is suitable to use as test gauge connection providing test pressure DOES NOT exceed maximum 0.5 psig (14-in. w.c.) stated on gas control valve, see Fig. 21.

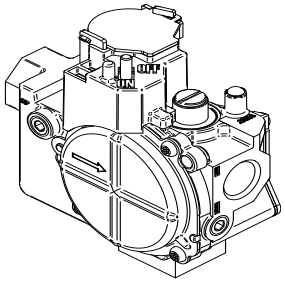

A06666

Fig. 21 – Redundant Automatic Gas Control Valve

Some installations require gas entry on right side of furnace (as viewed in upflow), see Fig. 22.

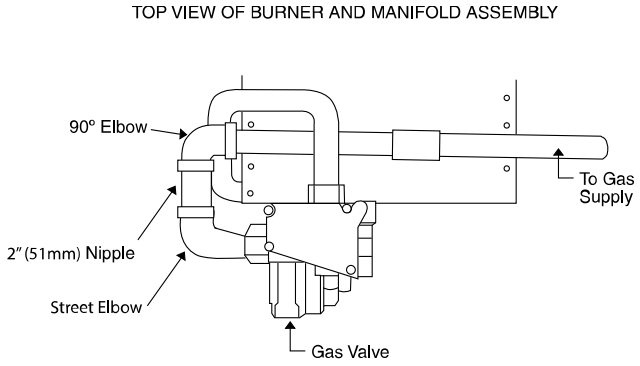

A08551

Fig. 22 – Burner and Manifold

Install a sediment trap in riser leading to furnace, see Fig. 23. Connect a capped nipple into lower end of tee. Capped nipple should extend below level of furnace gas controls. Place a ground joint union between furnace gas control valve and exterior manual equipment gas shutoff valve.

A 1/8-in. (3 mm) NPT plugged tapping, accessible for test gauge connection, **MUST** be installed immediately upstream of gas supply connection to furnace and downstream of manual equipment shutoff valve.

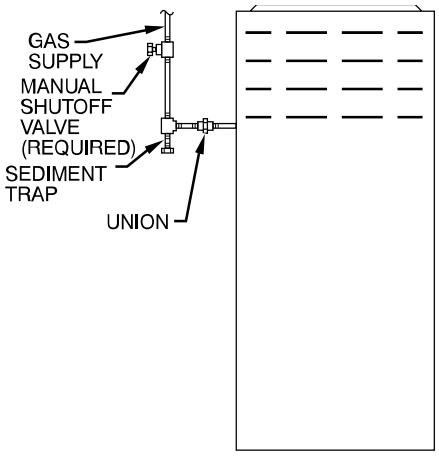

A02035

Fig. 23 – Typical Gas Pipe Arrangement

Piping should be pressure and leak tested in accordance with the current addition of the NFPA 54/ANSI Z223 in the United States, local, and national plumbing and gas codes before the furnace has been connected. After all connections have been made, purge lines and check for leakage at furnace prior to operating furnace.

If pressure exceeds 0.5 psig (14-in. w.c.), gas supply pipe must be disconnected from furnace and capped before and during supply pipe pressure test. If test pressure is equal to or less than 0.5 psig (14-in. w.c.), turn off electric shutoff switch located on furnace gas control valve and accessible manual equipment shutoff valve before and during supply pipe pressure test. After all connections have been made, purge lines and check for leakage at furnace prior to operating furnace.

The gas supply pressure shall be within the maximum and minimum inlet supply pressures marked on the rating plate with the furnace burners ON and OFF.

ELECTRICAL CONNECTIONS

See Fig. 24 for field wiring diagram showing typical field 115-V wiring. Check all factory and field electrical connections for tightness.

Field-supplied wiring shall conform with the limitations of 63°F (33°C) rise.

⚠ WARNING

ELECTRICAL SHOCK, FIRE OR EXPLOSION HAZARD

Failure to follow safety warnings could result in dangerous operation, serious injury, death or property damage.

Improper servicing could result in dangerous operation, serious injury, death or property damage.

- Before servicing, disconnect all electrical power to furnace.
- When servicing controls, label all wires prior to disconnection. Reconnect wires correctly.
- Verify proper operation after servicing.
- Always reinstall access doors after completing service and maintenance.

⚠ WARNING

ELECTRICAL SHOCK HAZARD

Failure to follow this warning could result in personal injury or death.

Blower access panel door switch opens 115-V power to control. No component operation can occur. Do not bypass or close switch with panel removed.

⚠ WARNING

ELECTRICAL SHOCK AND FIRE HAZARD

Failure to follow this warning could result in personal injury, death, or property damage.

The cabinet **MUST** have an uninterrupted or unbroken ground according to NEC NFPA 70 or local codes to minimize personal injury if an electrical fault should occur. This may consist of electrical wire, conduit approved for electrical ground or a listed, grounded power cord (where permitted by local code) when installed in accordance with existing electrical codes. Refer to the power cord manufacturer's ratings for proper wire gauge. Do not use gas piping as an electrical ground.

⚠ CAUTION

FURNACE MAY NOT OPERATE HAZARD

Failure to follow this caution may result in intermittent furnace operation.

Furnace control must be grounded for proper operation or else control will lock out. Control must remain grounded through green/yellow wire routed to gas valve and manifold bracket screw.

115-V Wiring

Furnace must have a 115-V power supply properly connected and grounded.

NOTE: Proper polarity must be maintained for 115-V wiring. If polarity is incorrect, control LED status indicator light will flash rapidly and Status code (10 . 1) is displayed. The furnace will NOT operate.

Verify that the voltage, frequency, and phase correspond to that specified on unit rating plate. Also, check to be sure that service provided by utility is sufficient to handle load imposed by this equipment. Refer to rating plate or Table 6 for equipment electrical specifications.

U.S. Installations: Make all electrical connections in accordance with National Electrical Code (NEC) NFPA 70 and any local codes or ordinances that might apply.

Use a separate, fused branch electrical circuit with a properly sized fuse or circuit breaker for this furnace. See Table 6 for wire size and fuse specifications. A readily accessible means of electrical disconnect must be located within sight of the furnace.

NOTE: Proper polarity must be maintained for 115-V wiring. If polarity is incorrect, control LED status indicator light will flash rapidly and status code (10 . 1) is displayed. The furnace will NOT operate.

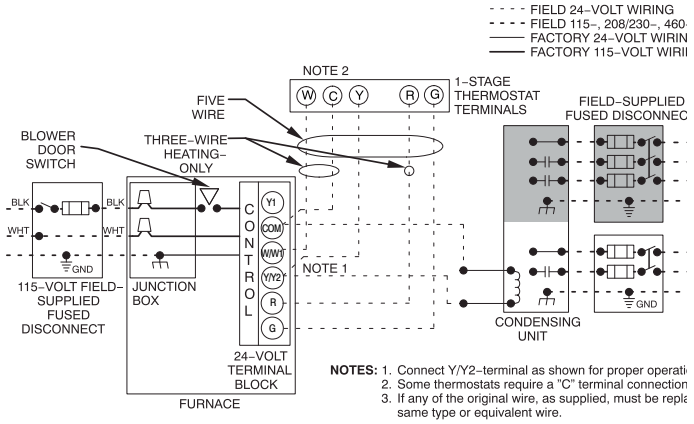

A200307

Fig. 24 – Typical Field Wiring Diagram

Table 6 – Electrical Data

FURNACE SIZE	VOLTS - HERTZ - PHASE	OPERATING VOLTAGE RANGE*		MAX UNIT AMPACITY†	UNIT AMPACITY	MINIMUM WIRE SIZE AWG	MAX WIRE LENGTH FT (M)‡		MAX. FUSE OR CKT. BKR AMPS**
		Max.	Min.				Feet	Meters	
045V14--12	115-60-1	127	104	7.9	10.7	14	34	10.6	15
070V14--12	115-60-1	127	104	7.9	10.7	14	34	10.6	15
070V17--16	115-60-1	127	104	10.4	13.8	14	26	8.2	15
090V17--16	115-60-1	127	104	8.2	11.0	14	34	10.3	15
090V21--20	115-60-1	127	104	13.9	18.1	12	31	9.6	15
110V21--22	115-60-1	127	104	14.4	18.6	12	30	9.4	15
135V24--22	115-60-1	127	104	14.4	18.6	12	30	9.4	15

*. Permissible limits of the voltage range at which the unit operates satisfactorily.
†. Unit ampacity = 125 percent of largest operating component's full load amps plus 100 percent of all other potential operating components' (EAC, humidifier, etc.) full load amps.
‡. Length shown is as measured 1 way along wire path between furnace and service panel for maximum 2 percent voltage drop.
**. Time-delay type is recommended.

⚠ WARNING

FIRE HAZARD

Failure to follow this warning could result in personal injury, death, or property damage.

Do not connect aluminum wire between disconnect switch and furnace. Use only copper wire, see Fig. 25.

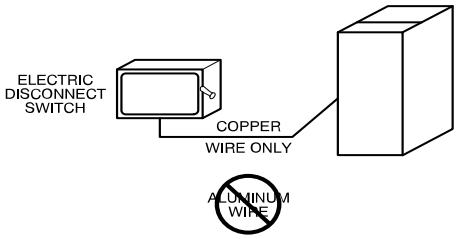

A190279

Fig. 25 – Copper Wire Only

J-BOX RELOCATION

NOTE: If factory location of J-Box is acceptable, go to next section (ELECTRICAL CONNECTION to J-Box).

NOTE: On 14-in. (356 mm) wide casing models, the J-Box shall not be relocated to other side of furnace casing when the vent pipe is routed within the casing.

1. Remove and save two screws holding J-Box, see Fig. 26.

NOTE: The J-Box cover need not be removed from the J-Box in order to move the J-Box. Do NOT remove green ground screw inside J-Box, see Fig. 26.

2. Cut wire tie on loop in furnace wires attached to J-Box.
3. Move J-Box to desired location.
4. Fasten J-Box to casing with the two screws removed in Step 1.
5. Route J-Box wires within furnace away from sharp edges, rotating parts and hot surfaces.

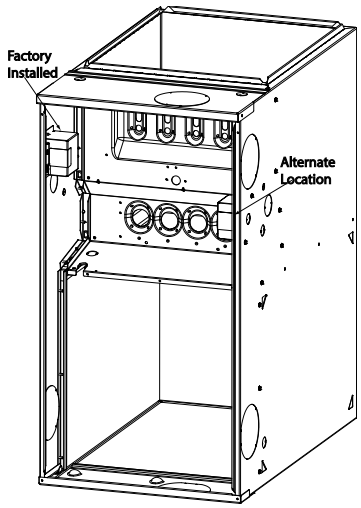

A10291

Fig. 26 – Relocating J-Box

Electrical Connection to J-Box Electrical Box on Furnace Casing Side

⚠ WARNING

FIRE OR ELECTRICAL SHOCK HAZARD

Failure to follow this warning could result in personal injury, death, or property damage.

High voltage field connections must be located in J-Box with furnace or in filed supplied external disconnect mounted to furnace.

If field-supplied manual disconnect switch is to be mounted on furnace casing side, select a location where a drill or fastener cannot damage electrical or gas components.

1. Select and remove a hole knockout in the casing where the electrical box is to be installed.

NOTE: Check that duct on side of furnace will not interfere with installed electrical box.

2. Remove the desired electrical box hole knockout and position the hole in the electrical box over the hole in the furnace casing.
3. Fasten the electrical box to casing by driving two field-supplied screws from inside electrical box into casing steel.
4. Remove and save two screws holding J-Box, see Fig. 26.
5. Pull furnace power wires out of 1/2-in. (12 mm) diameter hole in J-Box. Do not loosen wires from strain-relief wire-tie on outside of J-Box.

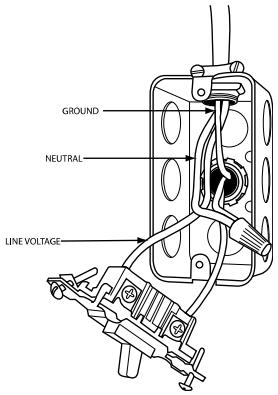

A190278

Fig. 27 – Field-Supplied Electrical Box on Furnace Casing

6. Route furnace power wires through holes in casing and electrical box and into electrical box.
7. Pull field power wires into electrical box.Remove cover from furnace J-Box.
8. Pull field power wires into electrical box.
9. Remove cover from furnace J-Box.
10. Route field ground wire through holes in electrical box and casing, and into furnace J-Box.
11. Reattach furnace J-Box to furnace casing with screws removed in Step 4.
12. Secure field ground wire to J-Box green ground screw.
13. Complete electrical box wiring and installation. Connect line voltage leads, see Fig. 27. Use best practices (NEC in U.S. for wire bushings, strain relief, etc.
14. Reinstall cover to J-Box. Do not pinch wires between cover and bracket.

Power Cord Installation in Furnace J-Box

NOTE: Power cords must be able to handle the electrical requirements listed in Table 6. Refer to power cord manufacturer's listings.

1. Remove cover from J-Box.
2. Route listed power cord through 7/8-in. (22 mm) diameter hole in J-Box.
3. Secure power cord to J-Box bracket with a strain relief bushing or a connector approved for the type of cord used.
4. Secure field ground wire to green ground screw on J-Box bracket.
5. Connect line voltage leads, see Fig. 24.
6. Reinstall cover to J-Box. Do not pinch wires between cover and bracket.

BX Cable Installation in Furnace J-Box

1. Remove cover from J-Box.
2. Route BX cable into 7/8-in. (22 mm) diameter hole in J-Box.
3. Secure BX cable to J-Box bracket with connectors approved for the type of cable used.
4. Secure field ground wire to green ground screw on J-Box bracket.
5. Connect line voltage leads, see Fig. 24.
6. Reinstall cover to J-Box. Do not pinch wires between cover and bracket.

24-V Wiring

Make field 24-V connections at the 24-V terminal strip, see Fig. 24 - Fig. 29. Connect terminal Y/Y2 as shown in Fig. 24 for proper cooling operation. Use only AWG No. 18, color-coded, copper thermostat wire.

The 24-V circuit contains an automotive-type, 3-amp. fuse located on the control. Any direct shorts during installation, service, or maintenance could cause this fuse to blow. If fuse replacement is required, use ONLY a 3-amp. fuse of identical size.

INTELISENSE™ TECHNOLOGY

This furnace is InteliSense capable when used with an ecobee for Carrier smart thermostat with InteliSense technology. InteliSense technology allows for the collection of performance data to be sent to the cloud. Utilizing Carrier's digital tools, dealers can gather system settings and equipment data with homeowner opt-in, to provide quicker and more efficient service. The furnace comes with a Return Air Temperature (RAT) sensor installed on the control board and a Supply Air Temperature (SAT) for installation in the field.

Install Supply Air Temperature (SAT) Sensor

1. Locate SAT sensor in main supply trunk after furnace and cooling coil. Placing the SAT sensor after the first bend in main supply trunk will yield the best readings. If this is not possible, placing the sensor farther down the main trunk will allow for more mixing and better results.
2. Drill a 1/4-in. hole at location in supply trunk where sensor will be installed.
3. Insert sensor in hole and use as a template to mark the two (2) mounting holes.
4. Drill two (2) 1/16-in. holes to accept No. 8 screws through pre-drilled holes in duct temperature sensor back plate.
5. Use two (2) provided No. 8 sheet metal screws to mount the supply air temperature sensor to the system.
6. Route SAT wire leads into furnace blower compartment along with the thermostat wires. Use provided grommet to protect the wires through the furnace casing.
7. Connect sensor wire leads to furnace control at the screw terminal marked SAT. If additional wire length is needed, thermostat wire and wire nuts can be used to extend the wires.

Refer to the thermostat advanced installation and configuration instructions found at Carrier.hvacpartners.com/InteliSense for system setup.

NOTE: When InteliSense communications with the thermostat is present, the green COMM light on the furnace control will be on. If the COMM light is not on when expected, check the steps under fault code 19.1 in the troubleshooting guide (Fig. 52). Fault code 19.1 will not be displayed until after InteliSense communication has been established for the first time.

Temperature Display

The SAT and RAT temperatures can be displayed on the control board 3 digit display. On the 3 digit display, navigate to (tP) and select F or C (Default is off). When enabled, the display will cycle through the current operating mode, SAT, RAT, and termperature differential during heating, cooling and heat pump operation. The temperatures will not be displayed in other operating modes.

ACCESSORIES

1. Electronic Air Cleaner (EAC)
   Connect an accessory Electronic Air Cleaner (if used) using 1/4-in female quick connect terminals to the two male 1/4-in quick-connect terminals on the control board marked EAC-1 and EAC-2. The terminals are rated for 115 VAC, 1.0 amps maximum and are energized during blower motor operation, see Fig. 29.
2. Humidifier (HUM)
   Connect an accessory 24 VAC, 0.5 amp. maximum humidifier (if used) to the 1/4-in male quick-connect HUM terminal and COM-24V screw terminal on the control board thermostat strip. The HUM terminal is energized when blower is energized in heating, see Fig. 29.

NOTE: DO NOT connect furnace control HUM terminal to HUM (humidifier) terminal on Thermidistat©, Zone Controller or similar device. See Thermidistat, Zone Controller, thermostat, or controller manufacturer's instructions for proper connection.

NOTE: For 24V & 115V EAC or Humidifier Accessory details, see Accessory instructions.

Alternate Power Supplies

This furnace is designed to operate on utility generated power which has a smooth sinusoidal waveform. If the furnace is to be operated on a generator or other alternate power supply, the alternate power supply must produce a smooth sinusoidal waveform for compatibility with the furnace electronics. The alternate power supply must generate the same voltage, phase, and frequency (Hz) as shown in Table 6 or the furnace rating plate.

Power from an alternate power supply that is non-sinusoidal may damage the furnace electronics or cause erratic operation.

Contact the alternate power supply manufacturer for specifications and details.

Thermostats

A single stage heating and cooling thermostat can be used with the furnace. The furnace control board CPU will control outdoor unit staging. A two stage heating and cooling thermostat can also be used to control the staging. For two stage thermostat control of a 2-stage outdoor unit, navigate to (CtC) and select (2St). Refer to typical thermostat wiring diagrams and the Sequence of Operation section for additional details. Consult the thermostat installation instructions for specific information about configuring the thermostat. See Fig. 30.

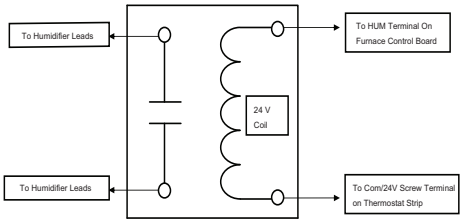

A11157

Fig. 28 – Field-supplied Isolation Relay for Humidifiers with Internal Power Supply

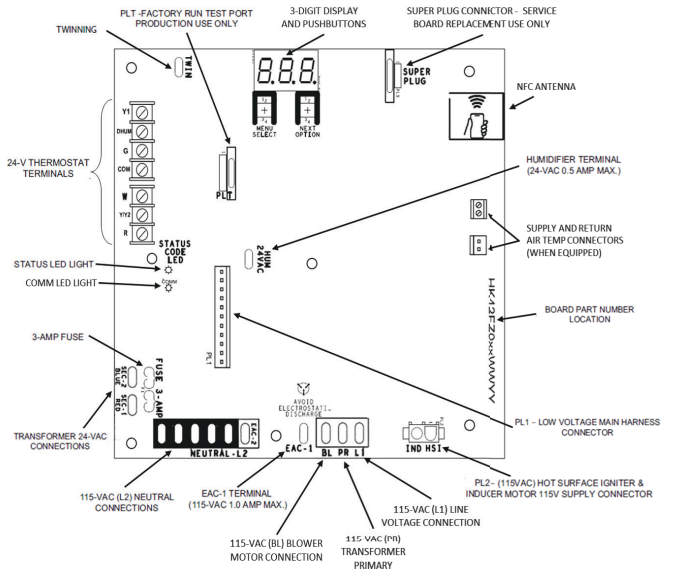

A221520

Fig. 29 – Example of Single Stage Furnace Control ECM Blower Motor

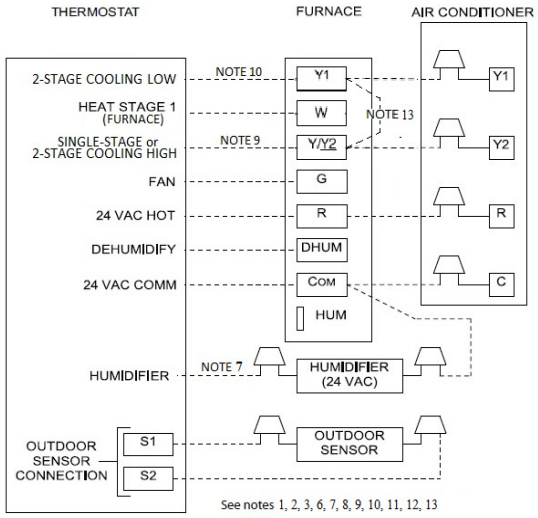

Single-Stage Furnace with Air Conditioner

A230172

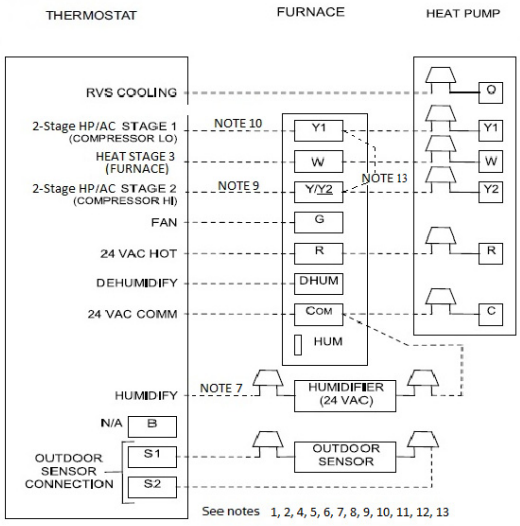

Single-Stage Furnace with Heat Pump

A230173

Fig. 30 – Thermostat Connection for Single-Stage Furnace and A/C & Heat Pump

Notes for thermostat drawings:

1. Thermostat output signals may vary. Consult thermostat installation instructions for more information.
2. Refer to outdoor equipment Installation Instructions for additional information and setup procedure.
3. Configure the thermostat for air conditioner installations. Refer to thermostat instructions.
4. Configure thermostat for HYBRID HEAT® dual fuel operation. Refer to thermostat instructions.
5. Heat pump MUST have a high pressure switch for HYBRID HEAT® dual fuel applications.
6. For Single-stage AC or HP, configure thermostat for single-stage compressor operation. Refer to thermostat instructions.
7. NO connection should be made to the furnace HUM terminal when using a thermostat with a 24 volt humidifier output.
8. For Two-Stage AC or HP, thermostat may be configured for two-stage compressor operation, allowing the thermostat to control staging, or thermostat may be configured for single stage operation, allowing furnace control to control staging. Refer to note 9 and thermostat instructions.
9. For Two-stage outdoor equipment, connection is Optional - See Cooling sequence of operations (adaptive mode) for additional information. If two-stage HP/cooling thermostat is connected to Y1 and Y/Y2 on Modulating or Two-stage furnace control board, Cooling Thermostat Type (CtE) (setting on furnace control) should be set to "2SE" to allow thermostat to control outdoor unit staging.
10. For Single-stage outdoor equipment, connect thermostat HP or AC output to Y/Y2 of furnace control.
11. Configure Dehumidify function to remove 24 VAC from Dehum terminal on a demand to dehumidify. Consult thermostat installation instructions for more information.
12. Thermostat terminal connection order on furnace control may vary-reference furnace control labeling for designations.
13. Field installed jumper required for InteliSense™ installations using single-stage AC or HP.

VENTING

The furnace shall be connected to a listed factory built chimney or vent, or a clay-tile lined masonry or concrete chimney. Venting into an unlined masonry chimney or concrete chimney is prohibited.

When an existing Category I furnace is removed or replaced, the original venting system, may no longer be sized to properly vent the attached appliances. An improperly sized Category I venting system could cause the formation of condensate in the furnace and vent, leakage of condensate and combustion products, and spillage of combustion products into the living space.

Vent system or vent connectors may need to be resized. Vent systems or vent connectors must be sized to approach minimum size as determined using appropriate table found in the current edition of NFPA 54/ANSI Z223.

General Venting Requirements

Follow all safety codes for proper vent sizing and installation requirements, including local building codes, the National Fuel Gas Code NFPA 54/ANSI Z223.1, Parts 12 and 13 in the United States, the local building codes, and furnace and vent manufacturers' instructions.

These furnaces are design-certified as Category I furnaces in accordance with ANSI Z21.47/CSA 2.3 and operate with a non-positive vent static pressure to minimize the potential for vent gas leakage. Category I furnaces operate with a flue loss not less than 17% to minimize the potential for condensation in the venting system. These furnaces are approved for common venting and multi-story venting with other fan assisted or draft hood equipped appliances in accordance with the NFCG, local building codes, and furnace and vent manufacturers' instructions.

The following information and warning must be considered in addition to the requirements defined in the NFPA 54/ANSI Z223.

⚠ WARNING

CARBON MONOXIDE POISONING HAZARD

Failure to follow this warning could result in personal injury or death.

Do not bypass the draft safeguard switch, as an unsafe condition could exist which must be corrected.

1. If a vent (common or dedicated) becomes blocked, the furnace will be shut off by the draft safeguard switch located on the vent elbow.
2. Do not vent this Category I furnace into a single wall dedicated or common vent. The dedicated or common vent is considered to be the vertical portion of the vent system that terminates outdoors.
3. Vent connectors serving Category I furnaces shall not be connected into any portion of a mechanical draft system operating under positive pressure.
4. Do not vent this appliance with any solid fuel burning appliance.
5. Category I furnaces must be vented vertically or nearly vertically unless equipped with a listed mechanical venter. See SIDEWALL VENTING section.
6. Do not vent this appliance into an unlined masonry chimney. (Refer to Chimney Inspection Chart, Fig. 31).

CHIMNEY INSPECTION CHART

For additional requirements refer to the National Fuel Gas Code NFPA 54/ANSI Z223.1 and ANSI/NFPA 211 Chimneys, Fireplaces, Vents, and Solid Fuel Burning Appliances

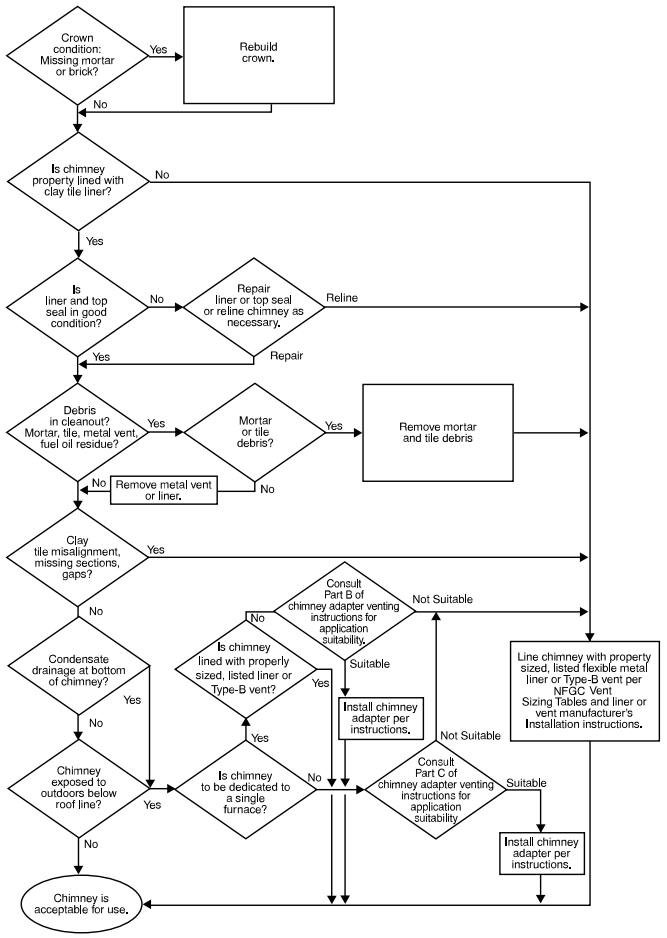

A10133

Fig. 31 – Chimney Inspection Chart

Masonry Chimney Requirement

NOTE: These furnaces are CSA design-certified for use in exterior tile-lined masonry chimneys with a factory accessory Chimney Adapter Kit. Refer to the furnace rating plate for correct kit usage. The Chimney Adapter Kits are for use with ONLY furnaces having a Chimney Adapter Kit number marked on the furnace rating plate.

If a clay tile-lined masonry chimney is being used and it is exposed to the outdoors below the roof line, relining might be required. Chimneys shall conform to the Standard for Chimneys, Fireplaces, Vents, and Solid Fuel Burning Appliances ANSI/NFPA 211 in the United States and must be in good condition.

U.S.A. - Refer to Sections 13.1.8 and 13.2.20 of the NFPA 54/ANSI Z223.1 or the authority having jurisdiction to determine whether relining is required. If relining is required, use a properly sized listed metal liner, Type-B vent, or a listed alternative venting design.

NOTE: See the NFPA 54/ANSI Z223.1 13.1.9 and 13.2.20 regarding alternative venting design and the exception, which cover installations such as our Chimney Adapter Kits which are listed for use with these furnaces. See Product Data Sheet for accessory listing.

⚠ WARNING

CARBON MONOXIDE POISONING HAZARD

Failure to follow the steps outlined below for each appliance connected to the venting system being placed into operation could result in carbon monoxide poisoning or death.

The following steps shall be followed for each appliance connected to the venting system being placed into operation, while all other appliances connected to the venting system are not in operation:

- Seal any unused openings in venting system.
- Inspect the venting system for proper size and horizontal pitch, as required in the National Fuel Gas Code, NFPA 54/ANSI Z223.1 and these instructions. Determine that there is no blockage or restriction, leakage, corrosion and other deficiencies, which could cause an unsafe condition.
- As far as practical, close all building doors and windows and all doors between the space in which the appliance(s) connected to the venting system are located and other spaces of the building.
- Close fireplace dampers.
- Turn on clothes dryers and any appliance not connected to the venting system. Turn on any exhaust fans, such as range hoods and bathroom exhausts, so they are operating at maximum speed. Do not operate a summer exhaust fan.
- Follow the lighting instructions. Place the appliance being inspected into operation. Adjust the thermostat so appliance is operating continuously.
- Test for spillage from draft hood equipped appliances at the draft hood relief opening after 5 minutes of main burner operation. Use the flame of a match or candle.
- If improper venting is observed during any of the above tests, the venting system must be corrected in accordance with the National Fuel Gas Code, NFPA 54/ANSI Z223.1.
- After it has been determined that each appliance connected to the venting system properly vents when tested as outlined above, return doors, windows, exhaust fans, fireplace dampers and any other gas-fired burning appliance to their previous conditions of use.

The Chimney Adapter Kit is a listed alternative venting system for these furnaces. See the kit instructions for complete details.

This furnace is permitted to be vented into a clay tile-lined masonry chimney that is exposed to the outdoors below the roof line, provided:

1. Vent connector is Type-B double-wall, and
2. This furnace is common vented with at least 1 draft hood equipped appliance, and
3. The combined appliance input rating is less than the maximum capacity given in Table 7, and
4. The input rating of each space heating appliance is greater than the minimum input rating given in Table 8 for the local 99% Winter Design Temperature. Chimneys having internal areas greater than 38 sq. in. (24516 sq. mm) require furnace input ratings greater than the input ratings of these furnaces. See footnote at bottom of Table 8, and
5. The authority having jurisdiction approves.

Exterior Masonry Chimney FAN + NAT Installations with Type-B Double-Wall Vent Connectors ©NFPA & AGA

Table 7 – Combined Appliance Maximum Input Rating in Thousands of BTUh per Hour

VENT HEIGHT FT (M)	INTERNAL AREA OF CHIMNEY SQ. IN. (SQ. MM)			
	12 (7741)	19 (12258)	28 (18064)	38 (24516)
6 (1.8)	74	119	178	257
8 (2.4)	80	130	193	279
10 (3.0)	84	138	207	299
15 (4.5)	NR	152	233	334
20 (6.0)	NR	NR	250	368
30 (9.1)	NR	NR	NR	404

If all of these conditions cannot be met, an alternative venting design shall be used, such as the listed chimney adapter kit with a furnace listed for use with the kit, a listed chimney-lining system, or a Type-B common vent.

Table 8 – Minimum Allowable Input Rating of Space-Heating Appliance in Thousands of BTUh per Hour

VENT HEIGHT FT. (M)	INTERNAL AREA OF CHIMNEY SQ. IN. (SQ. MM)			
	12 (7741)	19 (12258)	28 18064)	38 (24516)
Local 99% Winter Design Temperature: 17 to 26 degrees F				
6	0	55	99	141
8	52	74	111	154
10	NR	90	125	169
15	NR	NR	167	212
20	NR	NR	212	258
30	NR	NR	NR	362
Local 99% Winter Design Temperature: 5 to 16 degrees F*				
6	NR	78	121	166
8	NR	94	135	182
10	NR	111	149	198
15	NR	NR	193	247
20	NR	NR	NR	293
30	NR	NR	NR	377
Local 99% Winter Design Temperature: -10 to 4 degrees F*				
6	NR	NR	145	196
8	NR	NR	159	213
10	NR	NR	175	231
15	NR	NR	NR	283
20	NR	NR	NR	333
30	NR	NR	NR	NR
Local 99% Winter Design Temperature: -11 degrees F or lower				
Not recommended for any vent configuration.				

*. The 99.6% heating (db) temperatures found in the 1997 or 2001 ASHRAE Fundamentals Handbook, Climatic Design Information chapter, Table 1A (United States) and 2A (Canada) or the 2005 ASHRAE Fundamentals handbook, Climatic Design Information chapter, and the CD-ROM included with the 2005 ASHRAE Fundamentals Handbook.

Inspections before the sale and at the time of installation will determine the acceptability of the chimney or the need for repair and/or (re)lining. Refer to the Fig. 31 to perform a chimney inspection. If the inspection of a previously used tile-lined chimney:

a. Shows signs of vent gas condensation, the chimney should be relined in accordance with local codes and the authority having jurisdiction. The chimney should be relined with a listed metal

liner, Type-B vent, or a listed chimney adapter kit shall be used to reduce condensation. If a condensate drain is required by local code, refer to the NFPA 54/ANSI Z223.1, Section 12.10 for additional information on condensate drains.

b. Indicates the chimney exceeds the maximum permissible size in the tables, the chimney should be rebuilt or relined to conform to the requirements of the equipment being installed and the authority having jurisdiction.

A chimney without a clay tile liner, which is otherwise in good condition, shall be rebuilt to conform to ANSI/NFPA 211 or be lined with a UL listed metal liner or UL listed Type-B vent. Relining with a listed metal liner or Type-B vent is considered to be a vent-in-a-chase.

If a metal liner or Type-B vent is used to line a chimney, no other appliance shall be vented into the annular space between the chimney and the metal liner.

Appliance Application Requirements

Appliance operation has a significant impact on the performance of the venting system. If the appliances are sized, installed, adjusted, and operated properly, the venting system and/or the appliances should not suffer from condensation and corrosion. The venting system and all appliances shall be installed in accordance with applicable listings, standards, and codes.

The furnace should be sized to provide 100 percent of the design heating load requirement plus any margin that occurs because of furnace model size capacity increments. Heating load estimates can be made using approved methods available from Air Conditioning Contractors of America (Manual J); American Society of Heating, Refrigerating, and Air-Conditioning Engineers; or other approved engineering methods. Excessive oversizing of the furnace could cause the furnace and/or vent to fail prematurely.

When a metal vent or metal liner is used, the vent must be in good condition and be installed in accordance with the vent manufacturer's instructions.

To prevent condensation in the furnace and vent system, the following precautions must be observed:

1. The return-air temperature must be at least 60°F db except for brief periods of time during warm-up from setback at no lower than 55°F (13°C) db or during initial start-up from a standby condition.
2. Adjust the gas input rate per the installation instructions. Low gas input rate causes low vent gas temperatures, causing condensation and corrosion in the furnace and/or venting system. Derating is permitted only for altitudes above 2000 ft. (610 M).
3. Adjust the air temperature rise to the midpoint of the rise range or slightly above. Low air temperature rise can cause low vent gas temperature and potential for condensation problems.
4. Set the thermostat heat anticipator or cycle rate to reduce short cycling.

⚠ CAUTION

BURN HAZARD

Failure to follow this caution may result in personal injury.

Hot vent pipe is within reach of small children when installed in downflow position.

See the following instruction.

Air for combustion must not be contaminated by halogen compounds which include chlorides, fluorides, bromides, and iodides. These compounds are found in many common home products such as detergent, paint, glue, aerosol spray, bleach, cleaning solvent, salt, and air freshener, and can cause corrosion of furnaces and vents. Avoid using such products in the combustion-air supply. Furnace use during construction of the building could cause the furnace to be exposed to halogen compounds, causing premature failure of the furnace or venting system due to corrosion.

Vent dampers on any appliance connected to the common vent can cause condensation and corrosion in the venting system. Do not use vent dampers on appliances common vented with this furnace.

Additional Venting Requirements

A 4-in. (102 mm) round vent elbow is supplied with the furnace. A 5-in. (127 mm) or 6- in. (152 mm) vent connector may be required for some model furnaces. A field-supplied 4-in. (102 mm) to 5-in. (127 mm) or 4-in. (102 mm) to 6-in. (152 mm) sheet metal increaser fitting is required when 5-in. (127 mm) or 6-in. (152 mm) vent connector is used. Refer to Table 9 to determine the minimum vertical vent height for various furnace and vent orientations. See Fig. 32 - Fig. 46 Venting Orientation for approved vent configurations.

NOTE: Vent connector length for connector sizing starts at furnace vent elbow. The 4-in. (102 mm) vent elbow is shipped for upflow configuration and may be rotated for other positions. Remove the three screws that secure vent elbow to furnace, rotate furnace vent elbow to position desired, reinstall screws. The factory-supplied vent elbow does NOT count as part of the number of vent connector elbows.

The vent connector can exit the furnace through one of five locations on the casing.

⚠ CAUTION

CUT HAZARD

Failure to follow this caution may result in personal injury.

Sheet metal parts may have sharp edges or burrs. Use care and wear appropriate protective clothing, safety glasses and gloves when handling parts, and servicing furnaces.

1. Attach the single wall vent connector to the furnace vent elbow, and fasten the vent connector to the vent elbow with at least two field-supplied, corrosion-resistant, sheet metal screws located 180° apart.

NOTE: An accessory flue extension is available to extend from the furnace elbow to outside the furnace casing. See Product Data Sheet for accessory listing. If flue extension is used, fasten the flue extension to the vent elbow with at least two field-supplied, corrosion-resistant, sheet metal screws located 180° apart. Fasten the vent connector to the flue extension with at least two field-supplied, corrosion resistant sheet metal screws located 180° apart.

2. Vent the furnace with the appropriate connector, see Fig. 32 - Fig. 44.
3. Determine the correct location of the knockout to be removed.
4. Use a hammer and screwdriver to strike a sharp blow between the tie points and work the slug back and forth until the slug breaks free.

An accessory Vent Guard Kit is REQUIRED for downflow applications for use where the vent exits through the lower portion of the furnace casing. Refer to the Vent Guard Kit Instructions for complete details. See Product Data Sheet for accessory listing.

The horizontal portion of the venting system shall slope upwards not less than 1/4-in. per linear ft. (21 mm/m) from the furnace to the vent and shall be rigidly supported every 5 ft. (1.5 M) or less with metal hangers or straps to ensure there is no movement after installation.

Sidewall Venting

This furnace is not approved for direct sidewall horizontal venting.

Per section 12.4.3 of the NFPA 54/ANSI Z223.1, any listed mechanical venter may be used, when approved by the authority having jurisdiction. Select the listed mechanical venter to match the BTUh input of the furnace being vented. Follow all manufacturer's installation requirements for venting and termination included with the listed mechanical venter.

Caution!! For the following applications, use the minimum vertical heights as specified below. For all other applications, follow exclusively the National Fuel Gas Code.

Table 9 – Recommended Minimum Vent Height Per Furnace and Vent Orientation

FURNACE ORIENTATION	VENT ORIENTATION	FURNACE INPUT (BTUH/HR)	MIN. VENT DIAMETER IN. (mm)*	MIN. VERTICAL VENT HEIGHT FT. (M)†
Downflow	Vent elbow up then left Fig. 34	110,000	5 (127)	10 (3.0)
Downflow	Vent elbow left, then up Fig. 36	110,000	5 (127)	12 (3.6)
Downflow	Vent elbow up, then right Fig. 37	110,000	5 (127)	10 (3.0)

*. 4-in. (102 mm) inside casing or vent guard
†. Including 4 in. (102 mm) vent sections

NOTE: All vent configurations must also meet National Fuel Gas Code venting requirements NFPA 54/ANSI Z223.

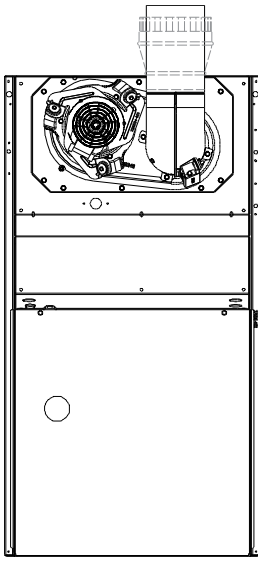

A03208

Fig. 32 – Upflow Application - Vent Elbow Up

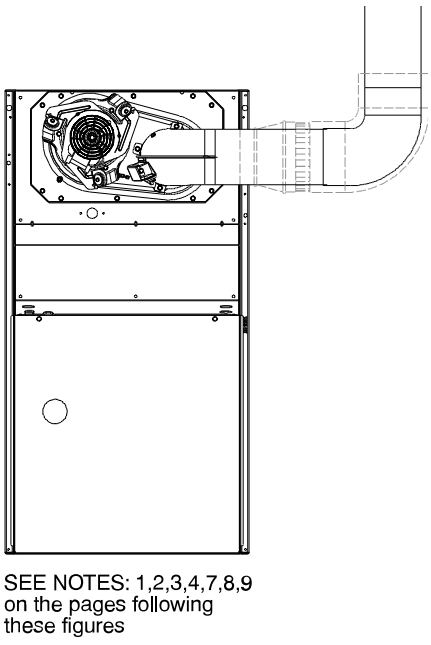

A03209

Fig. 33 – Upflow Application - Vent Elbow Right

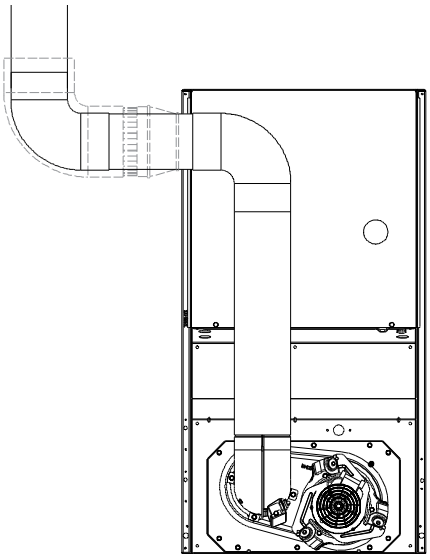

A03210

Fig. 34 – Downflow Application - Vent Elbow Up then Left

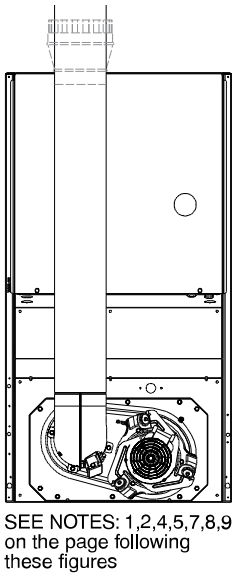

A03211

Fig. 35 – Downflow Application - Vent Elbow Up

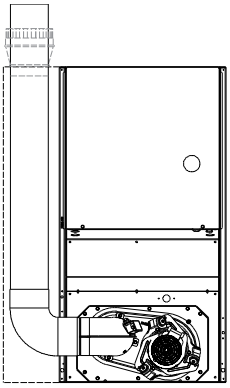

SEE NOTES: 1,2,4,5,6,7,8,9
on the page following these figures

Fig. 36 – Downflow Application - Vent Elbow Left then Up A03207

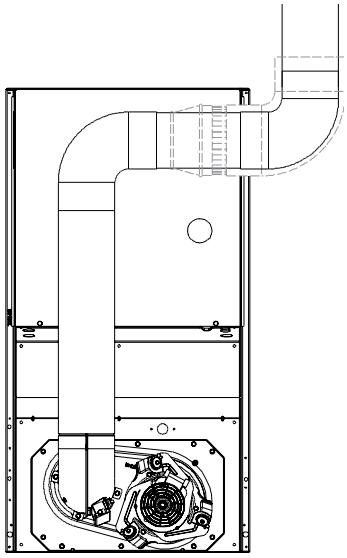

SEE NOTES:1,2,3,4,5,7,8,9
on the page following
these figures.

Fig. 37 – Downflow Application - Vent Elbow Up then Right A03212

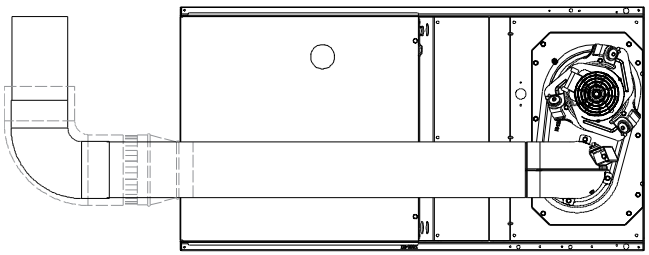

SEE NOTES: 1,2,4,5,7,8,9

Fig. 38 – Horizontal Right Application - Vent Elbow Left A02068

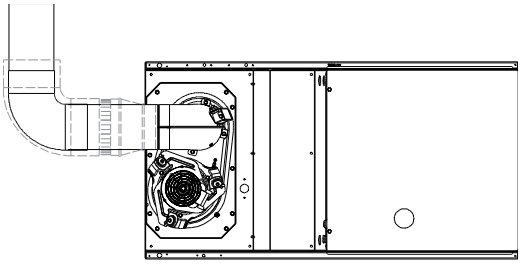

SEE NOTES: 1,2,4,7,8,9 on the page
following these figures

Fig. 39 – Horizontal Left Application - Vent Elbow Left A03213

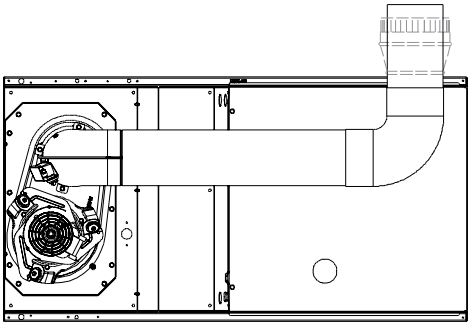

SEE NOTES: 1,2,4,5,7,8,9 on the page
following these figures

Fig. 40 – Horizontal Left Application - Vent Elbow Right then Up A03214

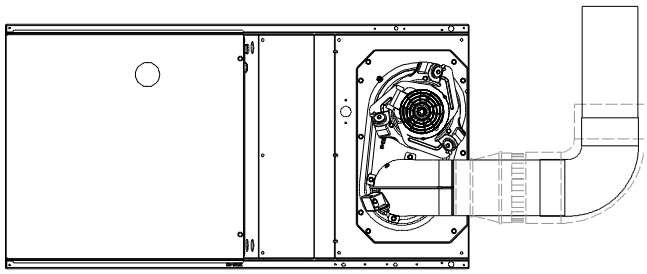

SEE NOTES: 1,2,4,7,8,9 on the page
following these figures

Fig. 41 – Horizontal Right Application-Vent Elbow Right A03218

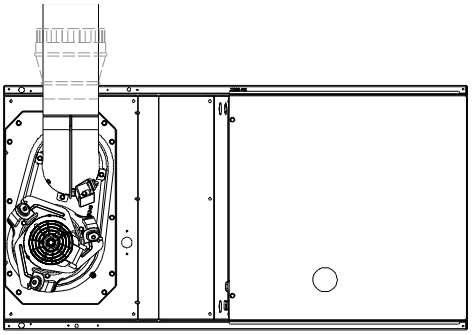

SEE NOTES: 1,2,4,5,7,8,9 on the page
following these figures

Fig. 42 – Horizontal Left Application - Vent Elbow Up A03215

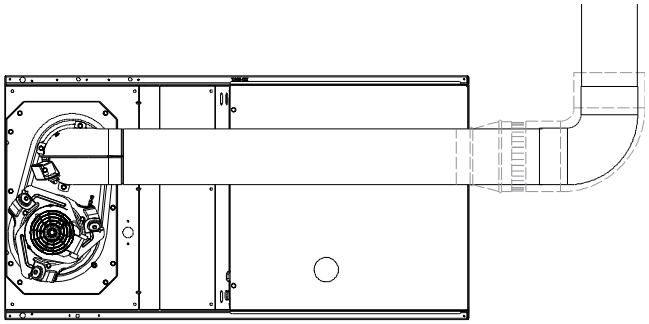

SEE NOTES: 1,2,4,5,7,8,9 on the page following these figures

Fig. 43 – Horizontal Left Application - Vent Elbow Right A03216

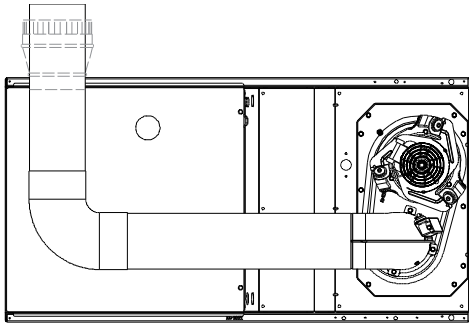

SEE NOTES: 1,2,4,5,7,8,9 on the page following these figures

Fig. 44 – Horizontal Right Application - Vent Elbow Left then Up A03219

Notes for Venting

1. For common vent, vent connector sizing and vent material: United States-use the NFPA 54/ANSI Z223.
2. Immediately increase to 5-in. (102 mm) or 6-in. (152 mm) vent connector outside furnace casing when 5-in. (127 mm) vent connector is required, refer to Note 1 above.
3. Side outlet vent for upflow and downflow installations must use Type B vent immediately after exiting the furnace, except when factory-approved Downflow Vent Guard Kit is used in the downflow position. See Product Data Sheet for accessory listing.
4. Type-B vent where required, refer to Note 1 above.
5. A 4-in.(102 mm) single-wall (26 ga. min.) vent must be used inside furnace casing and when the factory-approved Downflow Vent Guard Kit is used external to the furnace. See Product Data Sheet for accessory listing.
6. Accessory Downflow Vent Guard Kit required in downflow installations with lower vent configuration. See Product Data Sheet for accessory listing.
7. Chimney Adapter Kit may be required for exterior masonry chimney applications. Refer to Chimney Adapter Kit for sizing and complete application details. See Product Data Sheet for accessory listing.
8. Secure vent connector to furnace elbow with (2) corrosion-resistant sheet metal screws, spaced approximately 180° apart.
9. Secure all other single wall vent connector joints with (3) corrosion resistant screws spaced approximately 120° apart. Secure Type-B vent connectors per vent connector manufacturer's recommendations.

AIR DELIVERY - CFM

Table 10 – Air Delivery - CFM (with filter)*

Unit Size	Airflow Setting	Default Setting	External Static Pressure (in. w.c.)									
			0.1	0.2	0.3	0.4	0.5	0.6	0.7	0.8	0.9	1
045V14--12	1	Cont. Fan	455	390	325	255	185	115	-	-	-	-
	2		500	440	380	320	255	185	120	-	-	-
	3		565	510	450	395	340	285	220	145	-	-
	4		600	550	495	440	390	340	285	225	145	-
	5		655	605	555	505	455	410	365	310	255	190
	6		720	675	630	585	535	490	450	405	360	310
	7	Heating	770	725	680	640	595	550	505	465	425	380
	8		795	755	715	670	630	585	540	500	460	425
	9		825	785	745	705	660	620	575	535	500	460
	10		880	840	800	765	725	685	645	605	565	530
	11		910	875	835	800	760	725	685	645	605	570
	12		935	900	865	830	795	755	720	685	645	610
	13	Low Cooling	985	950	915	885	850	815	780	745	710	675
	14		1015	980	950	920	885	850	820	785	750	715
	15		1045	1010	980	945	915	885	850	815	785	750
	16		1075	1045	1015	980	950	920	890	855	825	790
	17		1110	1080	1045	1015	985	955	925	895	860	830
	18		1160	1130	1100	1070	1040	1015	985	955	920	890
	19		1190	1160	1130	1100	1075	1045	1015	990	960	930
	20		1220	1190	1160	1135	1105	1075	1050	1020	990	960
	21		1250	1225	1195	1165	1140	1115	1085	1060	1030	1000
	22		1280	1255	1225	1200	1175	1145	1120	1095	1065	1040
	23	High Cooling	1325	1295	1270	1245	1220	1190	1165	1140	1115	1085
	24		1400	1375	1350	1325	1300	1275	1250	1225	1180	1095
	25		1485	1460	1420	1380	1345	1305	1260	1225	1180	1100

Table 10 – Air Delivery - CFM (with filter)* (Continued)

Unit Size	Airflow Setting	Default Setting	External Static Pressure (in. w.c.)									
			0.1	0.2	0.3	0.4	0.5	0.6	0.7	0.8	0.9	1
070V14--12	1	Cont. Fan	480	420	355	285	220	160	115	-	-	-
	2		525	470	410	340	280	225	170	-	-	-
	3		565	510	455	395	340	275	225	175	135	-
	4		620	570	520	465	410	360	300	250	205	160
	5		650	605	560	510	460	405	355	300	250	210
	6		700	655	615	565	520	470	420	375	325	275
	7		715	675	630	585	540	495	440	395	345	300
	8		760	720	680	640	595	550	505	455	410	365
	9		815	780	740	700	660	620	580	535	490	450
	10		870	830	795	760	725	685	645	605	565	525
	11		920	885	850	815	780	745	710	675	635	595
	12		980	950	915	885	850	815	780	745	710	675
	13	Low Cooling	1035	1005	975	940	910	880	850	815	780	750
	14		1070	1040	1010	980	945	915	885	855	820	790
	15	Heating	1100	1070	1040	1010	980	950	920	890	860	830
	16		1130	1100	1070	1045	1015	985	955	925	895	865
	17		1160	1130	1105	1075	1045	1020	990	960	930	900
	18		1190	1160	1135	1105	1080	1050	1025	995	965	940
	19		1220	1190	1165	1135	1110	1080	1055	1025	1000	970
	20		1250	1225	1200	1170	1145	1115	1090	1065	1035	1010
	21		1285	1255	1230	1205	1180	1150	1125	1100	1070	1045
	22		1315	1290	1265	1235	1210	1185	1160	1135	1110	1085
	23	High Cooling	1345	1320	1295	1270	1245	1215	1190	1165	1140	1115
	24		1385	1360	1335	1310	1285	1260	1235	1215	1180	1140
	25		1470	1445	1415	1375	1340	1300	1260	1225	1180	1140
070V17--16	1	Cont. Fan	560	480	395	315	245	165	-	-	-	-
	2		615	540	465	385	320	255	175	-	-	-
	3		670	600	530	460	385	325	265	190	-	-
	4		745	680	615	550	485	415	360	305	245	165
	5		810	750	690	630	570	505	445	395	340	285
	6		875	815	760	705	645	590	530	470	420	375
	7		955	900	845	795	740	685	630	580	525	470
	8		1025	970	920	870	825	775	725	675	625	575
	9		1090	1045	995	945	900	855	805	760	715	665
	10		1170	1125	1080	1035	990	950	905	860	815	775
	11		1215	1170	1125	1080	1040	995	950	910	870	825
	12		1260	1220	1175	1135	1095	1055	1010	970	930	890
	13	Heating	1310	1270	1230	1190	1150	1110	1070	1030	990	955
	14	Low Cooling	1345	1305	1265	1225	1190	1150	1110	1070	1035	995
	15		1385	1345	1305	1265	1225	1185	1150	1110	1075	1040
	16		1420	1380	1345	1305	1270	1230	1195	1155	1120	1085
	17		1460	1420	1385	1345	1310	1275	1235	1205	1165	1135
	18		1495	1460	1425	1385	1350	1315	1280	1245	1210	1180
	19		1535	1500	1460	1425	1395	1355	1320	1290	1255	1225
	20		1575	1540	1505	1475	1440	1405	1370	1340	1305	1275
	21		1620	1585	1550	1515	1485	1450	1420	1390	1360	1330
	22		1655	1620	1585	1555	1525	1490	1460	1430	1400	1370
	23		1690	1655	1625	1595	1565	1535	1500	1475	1445	1420
	24		1750	1720	1690	1660	1630	1600	1570	1540	1500	1460
	25	High Cooling	1825	1795	1760	1720	1680	1635	1595	1555	1510	1470

Table 10 – Air Delivery - CFM (with filter)* (Continued)

Unit Size	Airflow Setting	Default Setting	External Static Pressure (in. w.c.)									
			0.1	0.2	0.3	0.4	0.5	0.6	0.7	0.8	0.9	1
090V17--16	1	Cont. Fan	660	580	480	410	340	265	210	150	-	-
	2		700	625	525	455	395	320	255	205	145	-
	3		750	685	585	520	460	395	325	270	220	165
	4		805	740	670	580	520	465	405	335	280	235
	5		855	795	730	640	580	520	465	405	345	295
	6		900	845	785	695	635	580	525	470	410	355
	7		945	890	835	770	685	630	575	530	475	415
	8		975	925	865	810	725	665	615	565	515	460
	9		1015	965	915	860	775	715	665	615	570	520
	10		1070	1020	970	920	865	785	730	680	630	590
	11		1130	1085	1040	990	945	865	805	755	710	665
	12		1170	1125	1080	1030	985	930	855	805	760	710
	13	Low Cooling	1200	1155	1115	1070	1020	975	900	845	800	755
	14	Heating	1240	1200	1160	1115	1070	1025	980	905	855	810
	15		1260	1220	1180	1140	1095	1050	1005	935	880	840
	16		1295	1255	1215	1175	1130	1090	1045	980	925	880
	17		1325	1285	1250	1210	1170	1125	1085	1035	965	920
	18		1360	1325	1285	1245	1210	1165	1125	1085	1015	960
	19		1395	1360	1320	1285	1245	1205	1165	1125	1075	1010
	20		1430	1390	1355	1320	1285	1245	1205	1165	1125	1060
	21		1460	1425	1390	1355	1320	1280	1245	1205	1165	1115
	22		1500	1465	1430	1395	1360	1320	1285	1245	1210	1170
	23		1535	1500	1465	1430	1400	1360	1325	1290	1255	1215
	24		1575	1540	1505	1475	1440	1405	1370	1335	1285	1225
	25	High Cooling	1615	1580	1545	1515	1480	1450	1410	1350	1285	1225
090V21--20	1	Cont. Fan	780	660	545	440	330	210	-	-	-	-
	2		860	740	645	535	440	340	220	-	-	-
	3		930	820	725	625	530	440	350	230	-	-
	4		1030	930	835	755	655	570	485	400	310	185
	5		1125	1035	935	860	785	690	610	530	450	370
	6		1210	1125	1035	955	880	805	725	645	570	495
	7		1285	1210	1125	1040	975	905	830	750	675	610
	8		1385	1310	1235	1150	1085	1020	955	885	815	745
	9		1475	1410	1340	1265	1190	1130	1065	1010	940	875
	10		1565	1500	1435	1365	1290	1230	1175	1115	1060	995
	11		1670	1605	1550	1485	1415	1350	1295	1240	1180	1130
	12	Heating/Low Cooling	1720	1660	1605	1540	1475	1410	1350	1300	1245	1195
	13		1765	1710	1655	1595	1530	1465	1405	1355	1305	1255
	14		1815	1760	1705	1650	1585	1525	1460	1410	1360	1310
	15		1860	1805	1755	1700	1640	1580	1515	1465	1415	1370
	16		1915	1865	1815	1760	1705	1645	1585	1530	1480	1435
	17		1970	1915	1865	1815	1760	1705	1645	1590	1540	1495
	18		2020	1965	1920	1870	1820	1765	1710	1650	1605	1560
	19		2070	2025	1975	1930	1880	1830	1775	1720	1670	1625
	20		2120	2075	2030	1985	1935	1885	1835	1785	1730	1685
	21		2170	2125	2080	2035	1990	1945	1895	1845	1795	1750
	22		2220	2175	2130	2090	2045	2000	1955	1910	1860	1815
	23	High Cooling	2270	2225	2185	2145	2100	2055	2015	1970	1920	1875
	24		2355	2315	2275	2240	2200	2160	2115	2075	2020	1965
	25		2470	2425	2385	2335	2285	2230	2175	2115	2050	1985

Table 10 – Air Delivery - CFM (with filter)* (Continued)

Unit Size	Airflow Setting	Default Setting	External Static Pressure (in. w.c.)									
			0.1	0.2	0.3	0.4	0.5	0.6	0.7	0.8	0.9	1
110V21--22	1	Cont. Fan	815	690	580	475	375	285	190	-	-	-
	2		890	780	670	570	475	385	300	215	135	-
	3		1000	900	800	700	615	525	440	360	285	210
	4		1100	1005	910	820	735	650	570	490	415	350
	5		1190	1105	1015	930	840	765	685	610	535	465
	6		1280	1195	1110	1025	945	865	795	725	645	575
	7		1385	1305	1225	1150	1070	995	920	860	790	720
	8		1480	1405	1335	1260	1190	1120	1045	975	920	850
	9		1575	1505	1435	1365	1295	1230	1165	1095	1030	975
	10		1685	1620	1555	1485	1420	1360	1295	1230	1165	1105
	11	Low Cooling	1785	1725	1660	1600	1535	1475	1415	1355	1300	1235
	12		1880	1825	1765	1705	1645	1590	1530	1470	1415	1365
	13	Heating	1935	1880	1825	1765	1710	1650	1595	1545	1490	1435
	14		1995	1940	1885	1825	1770	1715	1660	1605	1555	1505
	15		2010	1960	1905	1850	1790	1740	1685	1630	1580	1530
	16		2060	2005	1950	1900	1840	1790	1735	1685	1635	1585
	17		2095	2045	1990	1940	1885	1835	1780	1730	1680	1635
	18		2140	2090	2040	1990	1935	1885	1835	1790	1740	1695
	19		2190	2145	2095	2045	1995	1940	1895	1850	1805	1755
	20		2250	2205	2155	2105	2055	2010	1960	1915	1870	1830
	21	High Cooling	2305	2260	2215	2165	2120	2075	2030	1985	1940	1900
	22		2355	2305	2260	2220	2175	2130	2085	2040	2000	1960
	23		2400	2355	2315	2270	2230	2185	2145	2100	2060	2015
	24		2460	2420	2375	2335	2290	2250	2205	2150	2100	2045
	25		2515	2470	2430	2385	2345	2290	2230	2170	2110	2050
135V24--22	1	Cont. Fan	805	675	575	445	340	230	115	-	-	-
	2		875	765	660	555	440	340	230	120	-	-
	3		950	840	740	650	540	440	435	290	175	125
	4		1045	945	850	765	675	560	475	385	295	195
	5		1135	1045	950	865	785	700	595	515	430	350
	6		1220	1135	1045	960	885	810	725	630	550	475
	7		1320	1245	1165	1080	1010	940	865	790	690	620
	8		1415	1345	1270	1190	1120	1055	990	920	845	755
	9		1535	1465	1395	1325	1250	1185	1125	1065	1000	930
	10		1615	1555	1485	1420	1350	1285	1225	1170	1110	1050
	11	Low Cooling	1715	1660	1600	1535	1470	1400	1345	1290	1235	1180
	12		1770	1710	1650	1590	1525	1460	1400	1350	1295	1240
	13		1815	1760	1700	1640	1580	1515	1455	1405	1355	1300
	14		1860	1805	1750	1690	1630	1570	1510	1455	1405	1360
	15		1925	1870	1815	1760	1705	1645	1585	1530	1475	1430
	16	Heating	1980	1930	1875	1820	1765	1705	1650	1595	1545	1495
	17		2035	1980	1930	1875	1825	1770	1710	1655	1605	1560
	18		2085	2035	1985	1935	1880	1825	1775	1720	1670	1625
	19		2135	2090	2040	1990	1940	1885	1835	1785	1730	1685
	20		2185	2140	2090	2040	1995	1945	1895	1845	1795	1750
	21		2235	2190	2145	2095	2050	2000	1955	1905	1855	1810
	22	High Cooling	2285	2240	2195	2150	2105	2060	2010	1965	1920	1875
	23		2335	2290	2245	2200	2155	2115	2070	2025	1980	1935
	24		2415	2370	2330	2285	2245	2205	2160	2115	2065	2010
	25		2505	2460	2420	2380	2330	2275	2215	2155	2090	2020

NOTE:

1. A filter is required for each return-air inlet. Airflow performance included 3/4-in. (19 mm) washable filter media such as contained in a factory - authorized accessory filter rack. See accessory list. To determine airflow performance without this filter, assume an additional 0.1-in. w.c. available external static pressure.
2. **Adjust the blower airflow setting as necessary for the proper air temperature rise for each installation.**
3. Airflows over 1800 CFM require bottom return, two-side return, or bottom and side return. A minimum filter size of 20” x 25” (508 x 635 mm) is required.
4. For upflow applications, air entering from one side into both the side of the furnace and a return air base counts as a side and bottom return
5. The - entry indicates unstable operating conditions

Table 11 – Default Airflow Settings

	Default Airflow Settings*			Designated Airflow Settings	
Unit Size	Heating	High Cooling	Low Cooling	Heating	Constant Fan
045V14--12	7	23	13	(3 - 11)	(1 - 9)
070V14--12	15	23	13	(10 - 19)	(1 - 9)
070V17--16	13	25	14	(7 - 15)	(1 - 4)
090V17--16	14	25	13	(8 - 21)	(1 - 10)
090V21--20	12	23	12	(7 - 17)	(1 - 9)
110V21--22	13	21	11	(8 - 18)	(1 - 9)
135V24--22	16	22	11	(9 - 19)	(1 - 8)

*. Setting #1 is the default setting for Constant Fan

FURNACE CONTROL PROGRAMMING AND NAVIGATION

On-Board Control Method

⚠ WARNING

ELECTRICAL SHOCK HAZARD

Failure to follow this warning could result in personal injury, or death.

Blower access door switch removes 115-V power to control. No component operation can occur unless switch is closed. Caution must be taken when manually closing this switch for service purposes.

Do not tape or permanently allow the door switch to be bypassed. Temporarily depress the door switch with one hand while accessing the service buttons with your other hand. Do not touch uninsulated electrical components.

This furnace model is equipped with an on-board 3-digit LCD display with pushbutton navigation for the adjustment of operating parameters, diagnostics, and service. The control board must be powered to use the display and pushbuttons. Upon startup, the control will alternate displaying the Model Program Number (PrG) and Software Version (uEr). The control board has been programmed at the factory with a Model Program Number specific to the furnace product number. The correct Model Program Number is shown on the furnace rating plate.

The system's status is displayed after startup or after no control buttons have been pressed for 60 seconds. Status code LED will also be illuminated or blinking when displaying the system status. The codes which indicate the current operating mode of the system as shown in Table 12.

Table 12 – System Status Display Codes

Display	Operating Mode	Notes
idL	Idle/Standby Mode	No active demands
Ht	Heating Mode	Gas Heating active
CL2	High Cooling Mode	Cooling or Heat Pump active
CL 1	Low Cooling Mode	Cooling or Heat Pump active
HPd	Heat Pump Defrost Mode	Gas Heating cycle active during Heat Pump Defrost cycle
CFn, CF2, CF3	Continuous Fan Mode	Continuous Fan active
bLr	Secondary Unit Operating Blower	Only used when control is the secondary furnace of a twinned furnace system and primary furnace is active
##.#	Active Status Code	See Fig. 46 or Furnace Service Label for codes

Table 13 – Main Menu Options

Display	Menu Mode	Use
idL, HE, ...	Current System Status	Displays the current furnace operating mode or active fault code.
FLt	Last 7 faults that occurred	Faults code menu stores the 7 latest faults in memory. If no faults, None (non) will be displayed. To clear fault history, scroll to Clear (CLr) and press MENU/SELECT. See Fig. 46 or Furnace Service Label for codes.
tO	Temperature Display On/Off	Enable supply and return air temperature display on control.
HE	Heating blower speed	Heating Airflow Setting. Adjust higher to lower Temp. Rise; lower to increase Temp. Rise. See Start-Up Procedures. See Table 11 for allowable selections and Table 10 for airflows.
CL2, CL2	Cooling and Heat Pump blower speed	Cooling Airflow Setting. See Table 11 for allowable selections and Table 10 for airflows. Refer to cooling or heat pump equipment data for required airflow settings.
CFn	Constant Fan blower speed	Constant Fan Airflow Setting. See Table 11 for allowable selections and Table 10 for airflows.
Hod	Heat Blower-OFF Delay	Value shown in seconds. Shorter delays may leave unused heat in ducts. Longer delays may blow cold air at the end of heating demands.
Cod	Cool Blower-OFF Delay	Value shown in seconds. Shorter delays may leave unused energy in furnace coil. Longer delays may re-evaporate condensate.
CtE	Cooling thermostat type	Sets thermostat type.
d ir	Direction	Adjusts display orientation 180 degrees between up flow (UPF) and down flow (dnF).
tnn	Twinning	Primary (Pr 1) or Secondary (SEC) furnace selection. Adjust only if furnace is used in a twinned furnace system. Use of accessory kit required. See kit instructions.
inF	Program # and Software	Do NOT program the control board with a Model Program Number different than what is specified on the rating plate. Alternates displaying the saved Model Program Number (PrG) and Software Version (uEr).
Ct	Component Test	Use to validate components are functioning as intended. See Component Self-Test instructions in the Start-Up Procedures section.
rSt	Reset	Reset settings to Factory Default by selecting Yes (YES).

The Main Menu provides access to operating parameters of the furnace control including airflows as well as other diagnostics. See Fig. 29 for the location of the pushbuttons. Scroll through Main Menu by pressing MENU/SELECT button. Press NEXT/OPTION to display the current setting of the parameter (value will flash). Additional presses will scroll through setting options. Press MENU/SELECT button to save a new setting and return to the Main Menu. The display will flash three times to confirm a new setting selection has been saved. Fig. 45 shows the flow of the menu and settings. Table 13 provides additional information on parameter adjustment and applicability.

⚠ CAUTION

FURNACE OVERHEATING HAZARD

Failure to follow this caution could result in reduced furnace life.

Do NOT program the control board with a Model Program Number different than what is specified on the rating plate. Parameter options will not match design values.

NFC and Supported App Method

This furnace control board is also equipped with NFC (Near Field Communication) technology which allows the adjustment of operating parameters, diagnostics, and service via a field-supplied mobile device with NFC capability and supported mobile app. Remove 115-V power from the furnace control board to use this method. See Fig. 29 for the location of the NFC antenna. Additional instructions and help may be available through the supported mobile app.

Scan the mobile app QR Code on page 1 of this manual for more information and a link to download the mobile app.

Control Board Replacement

If the control board must be replaced, the new board must be programmed with the correct Model Program Number before the furnace will operate. Do NOT program the control board with a Model Program Number different than what is specified on the rating plate. The control may be programmed by either of these approved methods:

1. Use the supported mobile app to flash the model program onto the board using Near Field Communication (NFC). Scan the QR code on page 1 of this manual for more information and a link to download the mobile app.
2. Use the correct Super Plug (available from distributor / replacement component) for the control board to copy the correct model program onto the new board.

Further details and instructions for these programming methods are provided with the replacement control board.

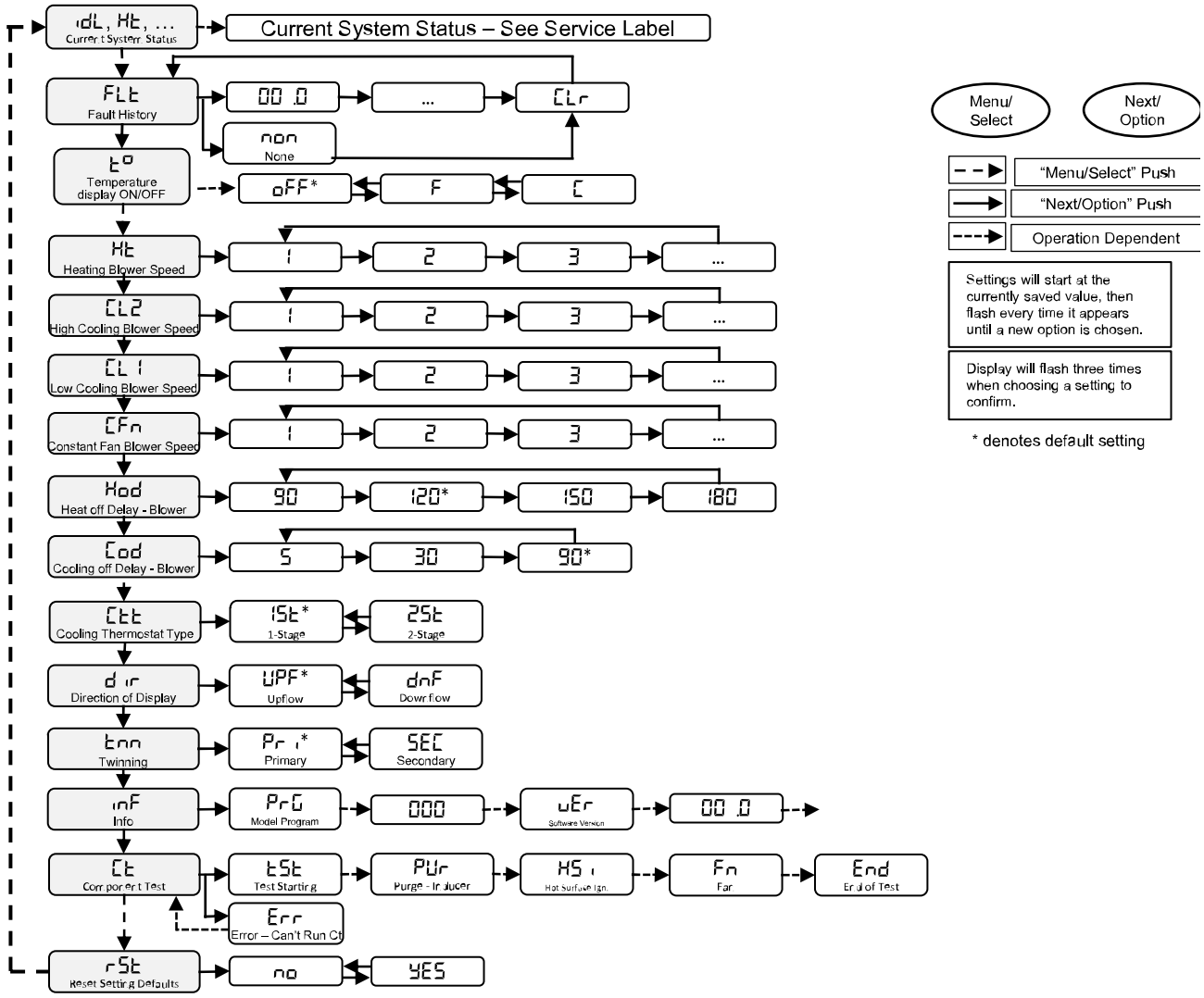

A221506

Fig. 45 – 3 Digit Display Flow Chart

SERVICE LABEL

STATUS CODE TABLE

← Scan QR code or reference troubleshooting guide in installation manual.

The major status code is displayed in the first 2 digits of the display. The minor status code is displayed in the third digit. The major status code is also displayed on the LED indicator through the door with the first digit being the number of short flashes and the second digit being the number of long flashes.

Major	Minor	Description
10	1	L1 polarity fault
Rapid flash LED		
12	1	W on at power up
13	1	Limit Lockout - switch open longer than 3 minutes in Main Limit circuit
14	1	Ignition Lockout after 4 consecutive ignition tries
	2	Flame lost 3 times after 70s of heating
	3	Lockout - 7 loss of flame events during a heat request
15	1	Lockout - no Blower rpms detected
19	1	InteliSense™ communications loss
21	1	24VAC sensed on gas valve when shouldn't be
22	1	False flame
23	1	PS stuck closed
24	1	Fuse fault
25	1	No program.
	2	Corrupted program file, reprogram control.
	3	Twinned units are not identical, program #'s do not match.
	4	Main program invalid, using backup program to operate.
	5	Installer settings corrupted.
25	6	Wrong program, reprogram control.
		If program in furnace control is missing, not recognized, or corrupted. Reprogram control with correct program # as listed on the rating plate.Replace control if issue remains.
27	1	Program in super plug is missing, not recognized, or corrupted. Remove super plug then retry. If still have 27 code, try a different super plug. If still fails, replace control.
	2	
	3	
31	1	Pressure switch open
33	1	Main Limit circuit open
34	1	Ignition fault - during four consecutive ignition trials.
	2	After successful ignition (flame proven) flame loss before heating blower on delay.
	3	After successful ignition (flame proven) flame loss after heating blower on delay.
41	1	No blower RPM at start up
	2	No RPM when blower motor is running
45	1	Internal control error
	2	GVR relay not closing
	3	Micro EEPROM error
	4	Micro loss of Comm
		For code 45, cycle power, if code 45 repeats, replace control.
46	1	Momentary loss of power
52	1	SAT - Open
	2	SAT - Short
53	1	RAT - Open
	2	RAT - Short

MENU NAVIGATION

Scroll through main menu by pressing the MENU/SELECT button. Press NEXT/OPTION button to view current setting (will flash on display) and to scroll through setting options. Press MENU/SELECT button to save new setting and return to main menu. The display will flash to confirm setting selection before returning to the main menu.

SYSTEM STATUS

DISPLAY	DESCRIPTION
idL	Idle / Standby Mode
Ht	Heating Mode
CL2	High Cooling Mode
CL1	Low Cooling Mode
HPd	Heat Pump Defrost Mode
CFn, CF2, CF3	Continuous Fan Mode
bLr	Secondary Unit Operating Blower during CFn, CL, or Ht
##.#	Active Status Code

COMPONENT TEST

To initiate the component test sequence, the control must be in (idL) mode. No thermostat demands (W, Y, G). Select component test (Ct) from menu select buttons to start the component test sequence.Once initiated the furnace control will perform the following sequence:
1. PUr- Inducer ON (remains ON for test).
2. HS1- After waiting 10s, HSI ON for 15 seconds.
3. Fn- After HSI, then Blower ON for 10 seconds.
4. End- After Blower, Inducer ON for 10 more seconds.
The test ends.

MAIN MENU

DISPLAY	DESCRIPTION
idL,Ht,...	Current System Status
FLt	Last 7 faults that occured
t°	Temperature Display On/Off
Ht	Heating Blower speed
CL	Cooling and Heat Pump Blower speed
CFn	Continuous Fan speed
Hod	Heat OFF delay
Cod	Cool OFF delay
Ctt	Cooling thermostat type
dir	Orientation upflow or downflow
tnn	Twinning Main or Secondary
inF	Program # and Software version
Ct	Component test
rSt	Reset All Installer Settings to Factory Defaults

All copyrighted materials used herein are the property of their respective owners.

SERVICE LABEL

348933-201 REV.A

A221528

Fig. 46 – Service Label

START-UP, ADJUSTMENT, AND SAFETY CHECK

General

⚠ WARNING

FIRE HAZARD

Failure to follow this warning could result in personal injury, death or property damage.

This furnace is equipped with manual reset limit switches in the gas control area. The switches open and shut off power to the gas valve, if a flame rollout or overheating condition occurs in the gas control area. DO NOT bypass the switches. Correct problem before resetting the switches.

1. Maintain 115-V wiring and ground. Improper polarity will result in rapid flashing control diagnostic light and status code (⁞0 .⁞) is displayed. The furnace will NOT operate.
2. Make thermostat wire connections at the 24-V terminal block on the furnace control. Failure to make proper connections will result in improper operation, see Fig. 24 - Fig. 29.
3. Gas supply pressure to the furnace must be greater than 4.5-in. w.c. (0.16 psig) but not exceed 14-in. w.c. (0.5 psig).
4. Check all manual-reset switches for continuity.
5. Replace blower compartment door. Door must be in place to operate furnace.

⚠ CAUTION

CUT HAZARD

Failure to follow this caution may result in personal injury.

Sheet metal parts may have sharp edges or burrs. Use care and wear appropriate protective clothing, safety glasses and gloves when handling parts, and servicing furnaces.

Start-Up Procedures

⚠ WARNING

FIRE OR EXPLOSION HAZARD

Failure to follow this warning could result in personal injury, death, and/or property damage.

Never purge a gas line into a combustion chamber. Never test for gas leaks with an open flame. Use a commercially available soap solution made specifically for the detection of leaks to check all connections. A fire or explosion may result causing property damage, personal injury or loss of life.

1. Purge gas lines after all connections have been made.
2. Check gas lines for leaks.

⚠ WARNING

ELECTRICAL SHOCK HAZARD

Failure to follow this warning could result in personal injury, or death.

Blower access door switch opens 115-V power to control. No component operation can occur unless switch is closed. Caution must be taken. Do not touch uninsulated electrical components when manually closing this switch. for service purposes.

3. To Begin Component Self-Test
   a. Remove thermostat wire connected to R terminal on control to ensure no thermostat demands are present.
   b. Temporarily depress blower door switch to power the control board.

⚠ CAUTION

SHOCK HAZARD

Failure to follow this caution could result in personal injury.

Do not tape or permanently allow the door switch to be bypassed. Temporarily depress the door switch with one hand while accessing the service buttons with your other hand. Do not touch uninsulated electrical components.

   c. To initiate the component test sequence, the control must be in (ıdL) mode. no thermostat demands (W, Y, G). Select component test (Ct) from menu select buttons to start the component test sequence. Once initiated the furnace control will perform the test sequence as shown in Table 14. Once complete, connect thermostat wire to R terminal on control board and re-install blower door.
4. Operate furnace per instruction on door.
5. Verify furnace shut down by lowering thermostat setting below room temperature.
6. Verify furnace restarts by raising thermostat setting above room temperature.

Table 14 – Test Sequence

Display	Operating Mode	Function
tSt	Test	Confirms start of Component Test mode.
Pur	Purge	Inducer ON Inducer remains ON for test duration.
HS ı	Hot Surface Igniter	Hot Surface Igniter ON for 15 seconds, then OFF.
Fn	Fan	Blower ON at 50% torque for 10 seconds, then OFF.
End	End Test	All component OFF except for Inducer ON for 10 seconds. Display returns to ıdL. If a thermostat input is detected or fault condition activates during the test sequence, control will abort and display End for 6 seconds.
Err	Error	Displayed if component test is not able start. Check for thermostat inputs or faults, and system status is Idle (ıdL).

WIRING DIAGRAM

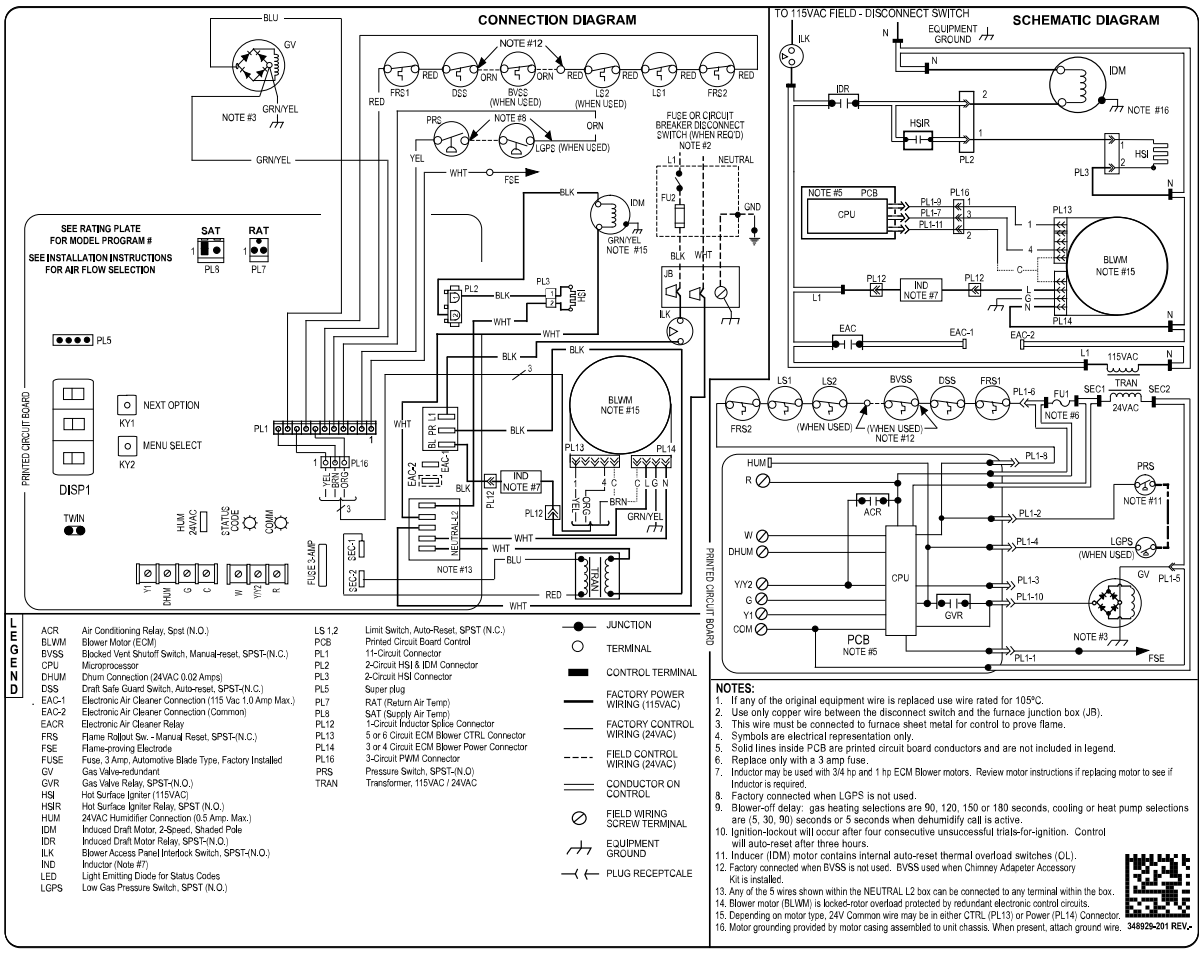

A221511

Fig. 47 – Wiring Diagram

ADJUSTMENTS

Furnace gas input rate on rating plate is for installations at altitudes up to 2000 Ft. (610 M). Furnace input rate must be within +/-2 percent of furnace rating plate input.

⚠ WARNING

FIRE HAZARD

Failure to follow this warning could result in personal injury, death and/or property damage.

DO NOT bottom out gas valve regulator adjusting screw. This can result in unregulated manifold pressure and result in excess overfire and heat exchanger failures.

1. Determine the correct gas input rate.
   The input rating for altitudes above 2,000 ft. (610 M) must be reduced by 4 percent for each 1,000 ft. (305 M) above sea level.
   For installations below 2000 Ft. (610 M), refer to the unit rating plate. For installations above 2000 Ft. (610 M), multiply the input on the rating plate by the de-rate multiplier in Table 15 for the correct input rate.

⚠ CAUTION

FURNACE DAMAGE HAZARD

Failure to follow this caution may result in reduced furnace life.

DO NOT redrill orifices. Improper drilling (burrs, out-of-round holes, etc.) can cause excessive burner noise and misdirection of burner flames. This can result in flame impingement of heat exchangers, causing failures, see Fig. 48.

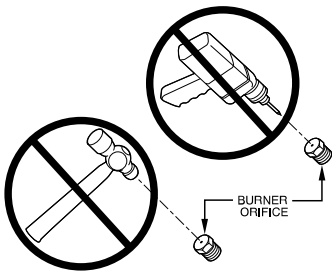

A93059

Fig. 48 – Orifice Hole

Table 15 – Altitude Derate Multiplier for U.S.A.

ALTITUDE FT. (M)	PERCENT OF DERATE	DERATE MULTIPLIER FACTOR*
0–2000 (0-610)	0	1.00
2001–3000 (610-914)	8–12	0.90
3001–4000 (914-1219)	12–16	0.86
4001–5000 (1219-1524)	16–20	0.82
5001–6000 1524-1829)	20–24	0.78
6001–7000 (1829-2134)	24–28	0.74
7001–8000 (2134-2438)	28–32	0.70
8001–9000 (2438-2743)	32–36	0.66
9001–10,000 (2743-3048)	36–40	0.62

2. Determine the correct orifice and manifold pressure adjustment. All models in all positions use Table 17 (22,000 BTUh per burner.) See input listed on rating plate. Low NOx models in the downflow or horizontal position must use Table 18 (21,000 BTUh/burner). See input listed on rating plate.
   a. Obtain average yearly gas heat value (at installed altitude) from local gas supplier.
   b. Obtain average yearly gas specific gravity from local gas supplier.
   c. Find installation altitude in Table 17.
   d. Find closest natural gas heat value and specific gravity in Table 17.
   e. Follow heat value and specific gravity lines to point of intersection to find orifice size and manifold pressure settings for proper operation.
   f. Check and verify burner orifice size in furnace. NEVER ASSUME ORIFICE SIZE. ALWAYS CHECK AND VERIFY.

NOTE: If orifice hole appears damaged or it is suspected to have been redrilled, check orifice hole with a numbered drill bit of correct size. Never redrill an orifice. A burr-free and squarely aligned orifice hole is essential for proper flame characteristics.

   g. Replace orifice with correct size, if required by Table 17. Use only factory-supplied orifices. See EXAMPLE 1.

EXAMPLE 1: 0–2000 ft. (0-610 M) altitude
For 22,000 BTUh per burner application use Table 17.
Heating value = 1000 BTUh/cu ft.
Specific gravity = 0.62
Therefore: Orifice No. 43*
Manifold pressure: 3.7-in. w.c.
* Furnace is shipped with No. 43 orifices. In this example all main burner orifices are the correct size and do not need to be changed to obtain proper input rate.

3. Adjust manifold pressure to obtain correct input rate, see Fig. 21.
   a. Turn gas valve ON/OFF switch to OFF.
   b. Remove manifold pressure tap plug from gas valve.
   c. Connect a water column manometer or similar device to manifold pressure tap.
   d. Turn gas valve ON/OFF switch to ON.
   e. Manually close blower door switch.
   f. Jumper R and W thermostat connections on control to start furnace, see Fig. 29.
   g. Remove regulator seal cap and turn regulator adjusting screw counterclockwise (out) to decrease input rate of clockwise (in) to increase input rate.

NOTE: DO NOT set manifold pressure less than 3.2-in. w.c. or more than 3.8-in. w.c. for natural gas at sea level. If manifold pressure is outside this range, change main burner orifices.

   h. Install regulator seal cap.
   i. Leave manometer or similar device connected and proceed to Step 4.

⚠ WARNING

ELECTRICAL SHOCK HAZARD

Failure to follow this warning could result in personal injury or death. Disconnect 115-V electrical power and install lockout tag before changing speed tap.

4. Verify natural gas input rate by clocking meter.

NOTE: Gas valve regulator adjustment cap must be in place for proper input to be clocked.

   a. Turn off all other gas appliances and pilots served by the meter.
   b. Jumper R to W.
   c. Run furnace for 3 minutes in heating operation.
   d. Measure time (in sec) for gas meter to complete 1 revolution and note reading. The 2 or 5 cubic feet dial provides a more accurate measurement of gas flow.
   e. Refer to Table 17 for cubic ft. of gas per hr.
   f. Multiply gas rate (cu ft./hr) by heating value (BTUh/cu ft.) to obtain input.
   g. If clocked rate does not match required input from Step 1, increase manifold pressure to increase input or decrease manifold pressure to decrease input. Repeat steps b through e until correct input is achieved. Reinstall regulator seal cap on gas valve.
   h. Remove jumper R to W.

Table 16 – Gas Rate (CU ft./hr)

SECONDS FOR 1 REV	SIZE OF TEST DIAL			SECONDS FOR 1 REV	SIZE OF TEST DIAL		
	1 Cu Ft.	2 Cu Ft.	5 Cu Ft.		1 Cu Ft.	2 Cu Ft.	5 Cu Ft.
10	360	720	1800	50	72	144	360
11	327	655	1636	51	71	141	355
12	300	600	1500	52	69	138	346
13	277	555	1385	53	68	136	340
14	257	514	1286	54	67	133	333
15	240	480	1200	55	65	131	327
16	225	450	1125	56	64	129	321
17	212	424	1059	57	63	126	316
18	200	400	1000	58	62	124	310
19	189	379	947	59	61	122	305
20	180	360	900	60	60	120	300
21	171	343	857	62	58	116	290
22	164	327	818	64	56	112	281
23	157	313	783	66	54	109	273
24	150	300	750	68	53	106	265
25	144	288	720	70	51	103	257
26	138	277	692	72	50	100	250
27	133	267	667	74	48	97	243
28	129	257	643	76	47	95	237

Table 16 – Gas Rate (CU ft./hr) (Continued)

29	124	248	621	78	46	92	231
30	120	240	600	80	45	90	225
31	116	232	581	82	44	88	220
32	113	225	563	84	43	86	214
33	109	218	545	86	42	84	209
34	106	212	529	88	41	82	205
35	103	206	514	90	40	80	200
36	100	200	500	92	39	78	196
37	97	195	486	94	38	76	192
38	95	189	474	96	38	75	188
39	92	185	462	98	37	74	184
40	90	180	450	100	36	72	180
41	88	176	439	102	35	71	178
42	86	172	429	104	35	69	173
43	84	167	419	106	34	68	170
44	82	164	409	108	33	67	167
45	80	160	400	110	33	65	164
46	78	157	391	112	32	64	161
47	76	153	383	116	31	62	155
48	75	150	375	120	30	60	150
49	73	147	367				

Table 17 – Orifice Size* and Manifold Pressure (in. w.c.) for Gas Input RateTabulated Data Based on 22,000 BTUh per burner

(TABULATED DATA BASED ON 22,000 BTUH PER BURNER, DERATED 4%/1000 FT (305M) ABOVE SEA LEVEL)

ALTITUDE RANGE ft (m)		AVG. GAS HEAT VALUE AT ALTITUDE (Btu/cu ft)	SPECIFIC GRAVITY OF NATURAL GAS 0.58 Orifice No.	0.58 Manifold Pressure	0.60 Orifice No.	0.60 Manifold Pressure	0.62 Orifice No.	0.62 Manifold Pressure	0.64 Orifice No.	0.64 Manifold Pressure
U.S.A.	0 (0) to 2000 (610)	900	42	3.5	42	3.6	42	3.7	41	3.5
		925	42	3.3	42	3.4	42	3.5	42	3.7
		950	**43**	**3.8**	42	3.3	42	3.4	42	3.5
		975	43	3.6	**43**	**3.8**	42	3.2	42	3.3
		1000	43	3.5	43	3.6	**43**	**3.7**	**43**	**3.8**
		1025	**43**	**3.3**	**43**	**3.4**	**43**	**3.5**	**43**	**3.6**
		1050	44	3.6	**43**	**3.2**	**43**	**3.4**	**43**	**3.5**
		1075	44	3.4	44	3.5	**43**	**3.2**	**43**	**3.3**
		1100	44	3.3	44	3.4	44	3.5	**43**	**3.2**
U.S.A.	2001 (611) to 3000 (914)	800	42	3.4	42	3.5	42	3.6	42	3.7
		825	42	3.2	42	3.3	42	3.4	42	3.5
		850	**43**	**3.7**	**43**	**3.8**	42	3.2	42	3.3
		875	43	3.5	43	3.6	**43**	**3.7**	**43**	**3.8**
		900	43	3.3	43	3.4	43	3.5	**43**	**3.6**
		925	43	3.1	43	3.2	43	3.3	43	3.4
		950	43	2.9	43	3.0	43	3.1	43	3.2
		975	43	2.8	43	2.9	43	3.0	43	3.1
		1000	**43**	**2.6**	**43**	**2.7**	**43**	**2.8**	**43**	**2.9**
U.S.A.	3001 (915) to 4000 (1219)	775	42	3.2	42	3.3	42	3.4	42	3.5
		800	43	3.6	43	3.8	42	3.2	42	3.3
		825	43	3.4	43	3.5	43	3.7	43	3.8
		850	43	3.2	43	3.3	43	3.4	43	3.6
		875	43	3.0	43	3.1	43	3.3	43	3.4
		900	43	2.9	43	3.0	43	3.1	43	3.2
		925	43	2.7	43	2.8	43	2.9	43	3.0
		950	**43**	**2.6**	**43**	**2.7**	**43**	**2.8**	**43**	**2.8**
U.S.A.	4001 (1220) to 5000 (1524)	750	43	3.6	43	3.8	42	3.2	42	3.3
		775	43	3.4	43	3.5	43	3.6	43	3.8
		800	43	3.2	43	3.3	43	3.4	43	3.5
		825	43	3.0	43	3.1	43	3.2	43	3.3
		850	43	2.8	43	2.9	43	3.0	43	3.1
		875	43	2.7	43	2.8	43	2.9	43	2.9
		900	43	2.5	43	2.6	43	2.7	43	2.8
		925	43	2.4	43	2.5	43	2.6	43	2.6
U.S.A.	5001 (1525) to 6000 (1829)	725	43	3.4	43	3.5	43	3.6	43	3.7
		750	43	3.2	43	3.3	43	3.4	43	3.5
		775	43	3.0	43	3.1	43	3.2	43	3.3
		800	43	2.8	43	2.9	43	3.0	43	3.1
		825	43	2.6	43	2.7	43	2.8	43	2.9
		850	43	2.5	43	2.5	43	2.6	43	2.7
		875	43	2.3	43	2.4	43	2.5	43	2.6
		900	43	2.2	43	2.3	43	2.3	43	2.4
U.S.A.	6001 (1830) to 7000 (2133)	675	43	3.4	43	3.5	43	3.6	43	3.7
		700	43	3.1	43	3.3	43	3.4	43	3.5
		725	43	2.9	43	3.0	43	3.1	43	3.2
		750	43	2.7	43	2.8	43	2.9	43	3.0
		775	43	2.6	43	2.7	43	2.7	43	2.8
		800	43	2.4	43	2.5	43	2.6	43	2.7
		825	43	2.3	43	2.3	43	2.4	43	2.5
		850	43	2.1	43	2.2	43	2.3	43	2.4

A10180

(TABULATED DATA BASED ON 22,000 BTUH PER BURNER, DERATED 4%/1000 FT (305M) ABOVE SEA LEVEL)

ALTITUDE RANGE ft (m)		AVG. GAS HEAT VALUE AT ALTITUDE (Btu/cu ft)	SPECIFIC GRAVITY OF NATURAL GAS 0.58 Orifice No.	0.58 Manifold Pressure	0.60 Orifice No.	0.60 Manifold Pressure	0.62 Orifice No.	0.62 Manifold Pressure	0.64 Orifice No.	0.64 Manifold Pressure
U.S.A.	7001 (2134) to 8000 (2438)	650	43	3.1	43	3.2	43	3.4	43	3.5
		675	43	2.9	43	3.0	43	3.1	43	3.2
		700	43	2.7	43	2.8	43	2.9	43	3.0
		725	43	2.5	43	2.6	43	2.7	43	2.8
		750	43	2.4	43	2.4	43	2.5	43	2.6
		775	43	2.2	43	2.3	43	2.4	43	2.4
		800	43	2.1	43	2.1	43	2.2	43	2.3
		825	48	3.7	**43**	**2.0**	**43**	**2.1**	**43**	**2.2**
U.S.A.	8001 (2439) to 9000 (2743)	625	43	2.9	43	3.0	43	3.1	43	3.2
		650	43	2.7	43	2.8	43	2.9	43	3.0
		675	43	2.5	43	2.6	43	2.7	43	2.8
		700	43	2.3	43	2.4	43	2.5	43	2.6
		725	43	2.2	43	2.2	43	2.3	43	2.4
		750	43	2.0	43	2.1	43	2.2	43	2.2
		775	48	3.6	48	3.7	**43**	**2.0**	**43**	**2.1**
U.S.A.	9001 (2744) to 10000 (3048)	600	43	2.7	43	2.8	43	2.9	43	3.0
		625	43	2.5	43	2.6	43	2.6	43	2.7
		650	43	2.3	43	2.4	43	2.4	43	2.5
		675	43	2.1	43	2.2	43	2.3	43	2.3
		700	48	3.7	**43**	**2.0**	**43**	**2.1**	**43**	**2.2**
		725	48	3.5	48	3.6	48	3.7	**43**	**2.0**

* Orifice numbers shown in **BOLD** are factory-installed.

A10180A

Table 18 – Orifice Size* and Manifold Pressure (in. w.c.) for Gas Input Rate Tabulated Data Based on 21,000 BTUh per burner

(TABULATED DATA BASED ON 21,000 BTUH PER BURNER, DERATED 4%/1000 FT (305M) ABOVE SEA LEVEL)

ALTITUDE RANGE ft (m)		AVG. GAS HEAT VALUE AT ALTITUDE (Btu/cu ft)	SPECIFIC GRAVITY OF NATURAL GAS 0.58 Orifice No.	0.58 Manifold Pressure	0.60 Orifice No.	0.60 Manifold Pressure	0.62 Orifice No.	0.62 Manifold Pressure	0.64 Orifice No.	0.64 Manifold Pressure
U.S.A.	0 (0) to 2000 (610)	900	42	3.2	42	3.3	42	3.4	42	3.5
		925	**43**	**3.7**	**43**	**3.8**	42	3.2	42	3.3
		950	43	3.5	43	3.6	**43**	**3.7**	**43**	**3.8**
		975	**43**	**3.3**	43	3.4	43	3.5	43	3.7
		1000	44	3.6	**43**	**3.3**	43	3.4	43	3.5
		1025	44	3.4	44	3.6	**43**	**3.2**	**43**	**3.3**
		1050	44	3.3	44	3.4	44	3.5	**43**	**3.2**
		1075	45	3.8	44	3.2	44	3.3	44	3.4
		1100	46	3.8	45	3.7	44	3.2	44	3.3
U.S.A.	2001 (611) to 3000 (914)	800	**43**	**3.8**	42	3.2	42	3.3	42	3.4
		825	43	3.5	**43**	**3.7**	**43**	**3.8**	42	3.2
		850	43	3.3	43	3.5	43	3.6	**43**	**3.7**
		875	43	3.2	43	3.3	43	3.4	43	3.5
		900	43	3.0	43	3.1	43	3.2	43	3.3
		925	43	2.8	43	2.9	43	3.0	43	3.1
		950	43	2.7	43	2.8	43	2.9	43	2.9
		975	43	2.5	43	2.6	43	2.7	43	2.8
		1000	**43**	**2.4**	**43**	**2.5**	**43**	**2.6**	**43**	**2.7**
U.S.A.	3001 (915) to 4000 (1219)	775	43	3.5	43	3.7	43	3.8	42	3.2
		800	43	3.3	43	3.4	43	3.5	**43**	**3.7**
		825	43	3.1	43	3.2	43	3.3	43	3.4
		850	43	2.9	43	3.0	43	3.1	43	3.2
		875	43	2.8	43	2.9	43	3.0	43	3.1
		900	43	2.6	43	2.7	43	2.8	43	2.9
		925	43	2.5	43	2.6	43	2.7	43	2.7
		950	**43**	**2.4**	**43**	**2.4**	**43**	**2.5**	**43**	**2.6**
U.S.A.	4001 (1220) to 5000 (1524)	750	43	3.3	43	3.4	43	3.5	43	3.6
		775	43	3.1	43	3.2	43	3.3	43	3.4
		800	43	2.9	43	3.0	43	3.1	43	3.2
		825	43	2.7	43	2.8	43	2.9	43	3.0
		850	43	2.6	43	2.7	43	2.8	43	2.8
		875	43	2.4	43	2.5	43	2.6	43	2.7
		900	43	2.3	43	2.4	43	2.5	43	2.5
		925	**43**	**2.2**	**43**	**2.2**	**43**	**2.3**	**43**	**2.4**
U.S.A.	5001 (1525) to 6000 (1829)	725	43	3.1	43	3.2	43	3.3	43	3.4
		750	43	2.9	43	3.0	43	3.1	43	3.2
		775	43	2.7	43	2.8	43	2.9	43	3.0
		800	43	2.5	43	2.6	43	2.7	43	2.8
		825	43	2.4	43	2.5	43	2.5	43	2.6
		850	43	2.2	43	2.3	43	2.4	43	2.5
		875	43	2.1	43	2.2	43	2.3	43	2.3
		900	**43**	**2.0**	**43**	**2.1**	**43**	**2.1**	**43**	**2.2**
U.S.A.	6001 (1830) to 7000 (2133)	675	43	3.1	43	3.2	43	3.3	43	3.4
		700	43	2.9	43	3.0	43	3.1	43	3.2
		725	43	2.7	43	2.8	43	2.9	43	2.9
		750	43	2.5	43	2.6	43	2.7	43	2.8
		775	43	2.3	43	2.4	43	2.5	43	2.6
		800	43	2.2	43	2.3	43	2.3	43	2.4
		825	43	2.1	43	2.1	43	2.2	43	2.3
		850	48	3.7	43	2.0	43	2.1	43	2.1

A10181

(TABULATED DATA BASED ON 21,000 BTUH PER BURNER, DERATED 4%/1000 FT (305M) ABOVE SEA LEVEL)

ALTITUDE RANGE ft (m)		AVG. GAS HEAT VALUE AT ALTITUDE (Btu/cu ft)	SPECIFIC GRAVITY OF NATURAL GAS 0.58 Orifice No.	0.58 Manifold Pressure	0.60 Orifice No.	0.60 Manifold Pressure	0.62 Orifice No.	0.62 Manifold Pressure	0.64 Orifice No.	0.64 Manifold Pressure
U.S.A.		**650**	**43**	**2.9**	**43**	**3.0**	**43**	**3.1**	**43**	**3.2**
	7001	675	**43**	**2.7**	**43**	**2.7**	**43**	**2.8**	**43**	**2.9**
	(2134)	700	**43**	**2.5**	**43**	**2.6**	**43**	**2.6**	**43**	**2.7**
	to	725	**43**	**2.3**	**43**	**2.4**	**43**	**2.5**	**43**	**2.5**
		750	**43**	**2.1**	**43**	**2.2**	**43**	**2.3**	**43**	**2.4**
	8000	775	**43**	**2.0**	**43**	**2.1**	**43**	**2.2**	**43**	**2.2**
	(2438)	800	48	3.6	48	3.7	**43**	**2.0**	**43**	**2.1**
		825	48	3.3	48	3.5	48	3.6	48	3.7
U.S.A.		**625**	**43**	**2.7**	**43**	**2.7**	**43**	**2.8**	**43**	**2.9**
	8001	650	**43**	**2.5**	**43**	**2.5**	**43**	**2.6**	**43**	**2.7**
	(2439)	675	**43**	**2.3**	**43**	**2.4**	**43**	**2.4**	**43**	**2.5**
	to	700	**43**	**2.1**	**43**	**2.2**	**43**	**2.3**	**43**	**2.3**
		725	48	3.7	**43**	**2.0**	**43**	**2.1**	**43**	**2.2**
	9000	750	48	3.5	48	3.6	48	3.7	**43**	**2.0**
	(2743)	775	49	3.8	48	3.4	48	3.5	48	3.6
U.S.A.		9001	600	**43**	**2.4**	**43**	**2.5**	**43**	**2.6**	**43**	**2.7**
	(2744)	625	**43**	**2.3**	**43**	**2.3**	**43**	**2.4**	**43**	**2.5**
	to	650	**43**	**2.1**	**43**	**2.2**	**43**	**2.2**	**43**	**2.3**
		675	48	3.6	48	3.8	**43**	**2.1**	**43**	**2.1**
	10000	700	48	3.4	48	3.5	48	3.6	48	3.7
	(3048)	725	49	3.7	49	3.8	48	3.4	48	3.5

* Orifice numbers shown in **BOLD** are factory-installed.

A10181B

Adjust Temperature Rise

NOTE: Blower door must be installed when taking temperature rise reading. Leaving blower door off will result in incorrect temperature measurements, due to possible changes in duct static pressure and airflow.

⚠ CAUTION

FURNACE DAMAGE HAZARD

Failure to follow this caution may result in:

- Overheating the heat exchangers or condensing flue gases in heat exchanger areas not designed for condensate.
- Shortened furnace life
- Component damage.

Temperature rise must be within limits specified on furnace rating plate. Recommended operation is at midpoint of rise range or slightly above.

The furnace must operate within the temperature rise ranges specified on the furnace rating plate. Do not exceed temperature rise range specified on unit rating plate. Determine the temperature rise as follows:

1. Place thermometers in return and supply ducts as close to furnace as possible. Be sure thermometers do not see radiant heat from heat exchangers. Radiant heat affects temperature rise readings. This practice is particularly important with straight-run ducts.
2. When thermometer readings stabilize, subtract return-air temperature from supply-air temperature to determine air temperature rise.

NOTE: The temperatures read by the RAT and SAT sensors connected to the control board can be displayed during heating and cooling operation by enabling this feature in the (ᵏ°) menu item. See Fig. 45. Select F for Fahrenheit or C for Celsius. When enabled, the display will cycle through the current operating mode, SAT, RAT, and temperature differential. If displayed SAT value does not agree with measured values, relocate SAT sensor farther away from furnace or after a bend in the ductwork.

3. If the temperature rise is outside this range, first check:
   a. Check gas input for heating operation.
   b. Check derate for altitude, if applicable.
   c. Check all return and supply ducts for excessive restrictions causing static pressures greater than 0.50-in. w.c.
4. Connect a jumper across R and W at the thermostat terminals at the furnace control.
5. Allow the burners to ignite and the blower to turn on.
6. Allow the supply temperature to stabilize and verify the proper rise range.

If the temperature rise is too high or too low.

1. Remove jumpers from R and W.
2. Wait until the blower off delay is completed.
3. Remove blower door.
4. Refer to the FURNACE CONTROL PROGRAMMING AND NAVIGATION section of this manual for instructions on adjusting the blower speed.
5. Replace blower door.
6. Re-check low heat temperature rise.

After the temperature rise has been verified:

1. Remove jumpers from thermostat terminals.
2. Allow the blower off delay to complete.

⚠ WARNING

FURNACE OVERHEATING HAZARD

Failure to follow this caution may result in reduced furnace life.

Recheck temperature rise. It must be within limits specified on the rating plate. Recommended operation is at the mid-point of rise range or slightly above.

⚠ WARNING

ELECTRICAL SHOCK HAZARD

Failure to follow this warning could result in personal injury or death.

Blower access door switch opens 115-V power to control. No component operation can occur unless switch is closed. Caution must be taken when manually closing this switch.

Check Safety Controls

The flame sensor, gas valve, and pressure switch were all checked in the Start-up procedure section as part of normal operation.

1. Check Main Limit Switch
   This control shuts off combustion system and energizes air-circulating blower motor, if furnace overheats. By using this method to check limit control, it can be established that limit is functioning properly and will operate if there is a restricted return-air supply or motor failure. If limit control does not function during this test, cause must be determined and corrected.
   a. Run furnace for at least 5 minutes.
   b. Gradually block off return air with a piece of cardboard or sheet metal until the limit trips.
   c. Unblock return air to permit normal circulation.
   d. Burners will re-light when furnace cools down.
2. Check draft safeguard switch. The purpose of this control is to cause the safe shutdown of the furnace during certain blocked vent conditions.
   a. Verify vent pipe is cool to the touch.
   b. Disconnect power to furnace and remove vent connector from furnace vent elbow.
   c. Restore power to furnace and set room thermostat above room temperature.
   d. After normal start-up, allow furnace to operate for 2 minutes, then block vent elbow in furnace 80 percent of vent area with a piece of flat sheet metal.

e. Furnace should cycle off within 2 minutes. If gas does not shut off within 2 minutes, determine reason draft safeguard switch did not function properly and correct condition.

NOTE: Should switch remain open longer than 3 minutes, furnace control board will lockout the furnace for 3 hours. To reset furnace control board, turn thermostat below room temperature or from HEAT to OFF and turn 115-V power OFF, then back ON.

f. Remove blockage from furnace vent elbow.

g. Switch will auto-reset when it cools.

h. Re-install vent connector.

3. Check Pressure Switch(es)
   This control proves operation of the draft inducer blower.
   a. Turn off 115-V power to furnace.
   b. Disconnect inducer motor lead wires from wire harness.
   c. Turn on 115-V power to furnace.
   d. Set thermostat to "call for heat" and wait 1 minute. When pressure switch is functioning properly, hot surface igniter should NOT glow and control diagnostic light flashes a status code (3 1 . 1). If hot surface igniter glows when inducer motor is disconnected, shut down furnace immediately, determine reason pressure switch did not function properly and correct condition.
   e. Turn off 115-V power to furnace.
   f. Reconnect inducer motor wires, replace outer door, and turn on 115-V power.
   g. Blower will run for 90 seconds before beginning the call for heat again.
   h. Furnace should ignite normally.

Checklist

- Put away tools and instruments. Clean up debris.
- Check Input/Output gas pressure
- Check heat rise per application static pressure
- Cooling CFM per application static pressure
- Verify that blower-OFF delay time is selected as desired.
- Verify that blower and burner access doors are properly installed.
- Cycle test furnace with room thermostat.
- Check operation of accessories per manufacturer's instructions.
- Review User's Guide with owner.
- Attach literature packet to furnace.

SERVICE AND MAINTENANCE PROCEDURES

Untrained personnel can perform basic maintenance functions such as cleaning and replacing air filters. All other operations must be performed by trained service personnel. A qualified service person should inspect the furnace once a year.

⚠ WARNING

FIRE, INJURY OR DEATH HAZARD

Failure to follow this warning could result in personal injury, death and/or property damage.

The ability to properly perform maintenance on this equipment requires certain knowledge, mechanical skills, tools, and equipment. If you do not possess these, do not attempt to perform any maintenance on this equipment other than those procedures recommended in the User's Manual.

⚠ CAUTION

ENVIRONMENTAL HAZARD

Failure to follow this caution may result in environmental pollution.

Remove and recycle all components or materials (i.e. oil, refrigerant, control board, etc.) before unit final disposal.

⚠ WARNING

ELECTRICAL SHOCK, FIRE OR EXPLOSION HAZARD

Failure to follow this warning could result in personal injury or death, or property damage.

Before installing, modifying, or servicing system, main electrical disconnect switch must be in the OFF position and install a lockout tag. There may be more than one disconnect switch. Lock out and tag switch with a suitable warning label. Verify proper operation after servicing.

⚠ CAUTION

ELECTRICAL OPERATION HAZARD

Failure to follow this caution may result in improper furnace operation or failure of furnace.

Label all wires prior to disconnection when servicing controls. Wiring errors can cause improper and dangerous operation.

GENERAL

These instructions are written as if the furnace is installed in an upflow application. An upflow furnace application is where the blower is located below the combustion and controls section of the furnace, and conditioned air is discharged upward. Since this furnace can be installed in any of the 4 positions (see Fig. 3), you must revise your orientation to component location accordingly.

ELECTRICAL CONTROLS AND WIRING

The electrical ground and polarity for 115-V wiring must be properly maintained. See Fig. 24 for field wiring information and Fig. 47 for furnace wiring information.

⚠ WARNING

ELECTRICAL SHOCK HAZARD

Failure to follow this warning could result in personal injury or death.

There may be more than one electrical supply to the furnace. Check accessories and cooling unit for additional electrical supplies that must be shut off during furnace servicing. Lock out and tag switch with a suitable warning label.

NOTE: If the polarity is not correct, the STATUS LED on the control will flash rapidly and status code (10 . 1) is displayed. This will prevent the furnace from heating. The control system also requires an earth ground for proper operation of the control and flame-sensing electrode.

The 24-V circuit contains an automotive-type, 3-amp. fuse located on the control, see Fig. 29. Any shorts of the 24-V wiring during installation, service, or maintenance will cause this fuse to blow. If fuse replacement is required, use ONLY a 3-amp. fuse. The control LED will display status code (24 . 1) when fuse needs to be replaced.

Proper instrumentation is required to service electrical controls. The control in this furnace is equipped with a status code LED (Light-Emitting Diode) and Major/Minor 3 digit codes to aid in installation, servicing, and troubleshooting. Status codes can be viewed at the sight glass in blower access door. The furnace control LED is

either ON continuously, rapid flashing, or a code composed of 2 digits. The major status code is displayed on the LED indicator through the door with the first digit being the number of short flashes and the second digit being the number of long flashes. The major status code is displayed in the first 2 digits of the display. The minor status code is displayed in the third digit.

For an explanation of status codes, refer to service label located on blower access door, or Fig. 46 and the troubleshooting guide by scanning the QR code or see Fig. 52 for a brief Troubleshooting Guide.

Retrieving Stored Fault Codes

The stored status code will not be erased from the control memory, if 115-V or 24-V power is interrupted. See the Service Label Fig. 46 for more information.

1. To retrieve the last 7 fault codes, proceed with the following:

NOTE: NO thermostat signal may be present at control, and all blower-OFF delays must be completed.

a. Leave 115-V power to furnace turned on.
b. Remove outer access door.
c. Remove the inner blower door.

⚠ CAUTION

SHOCK HAZARD

Failure to follow this caution could result in personal injury.

Do not tape or permanently allow the door switch to be bypassed. Temporarily press the door switch with one hand while accessing the service buttons with your other hand. Do not touch uninsulated electrical components.

d. Depress blower door switch to energize the control board.
e. Press menu/select button until (FLt) is displayed.
f. Press Next/Option button to cycle through the fault history. Faults remain in memory for 72 hours of powered operation after the last fault occurs. Faults may be manually cleared by selecting (CLr) with the menu/select button.

CARE AND MAINTENANCE

⚠ WARNING

FIRE OR EXPLOSION HAZARD

Failure to follow this warning could result in personal injury, death and/or property damage.

Never store anything on, near, or in contact with the furnace, such as:

1. Spray or aerosol cans, rags, brooms, dust mops, vacuum cleaners, or other cleaning tools.
2. Soap powders, bleaches, waxes or other cleaning compounds, plastic or plastic containers, gasoline, kerosene, cigarette lighter fluid, dry cleaning fluids, or other volatile fluids.
3. Paint thinners and other painting compounds, paper bags, or other paper products. Exposure to these materials could lead to corrosion of the heat exchangers.

For continuing high performance and to minimize possible furnace failure, periodic maintenance must be performed on this furnace. Consult your local dealer about proper frequency of maintenance and the availability of a maintenance contract.

⚠ WARNING

ELECTRICAL SHOCK AND FIRE HAZARD

Failure to follow this warning could result in personal injury, death, and/or property damage.

Turn off the gas and electrical supplies to the furnace and install lockout tag before performing any maintenance or service. Follow the operating instructions on the label attached to the furnace.

⚠ WARNING

CARBON MONOXIDE POISONING AND FIRE HAZARD

Failure to follow this warning could result in personal injury, death and/or property damage.

Never operate furnace without a filter or with filter access door removed.

⚠ CAUTION

CUT HAZARD

Failure to follow this caution may result in personal injury.

Sheet metal parts may have sharp edges or burrs. Use care and wear appropriate protective clothing, safety glasses and gloves when handling parts, and servicing furnaces.

The minimum maintenance on this furnace is as follows:

1. Check and clean air filter each month or more frequently if required. Replace if torn.
2. Check blower motor and wheel for cleanliness each heating and cooling season. Clean as necessary.
3. Check electrical connections for tightness and controls for proper operation each heating season. Service as necessary.
4. Inspect burner compartment before each heating season for rust, corrosion, soot or excessive dust. If necessary, have furnace and burner serviced by a qualified service agency.
5. Inspect the vent pipe/vent system before each heating season for rust, corrosion, water leakage, sagging pipes or broken fittings. Have vent pipes/vent system serviced by a qualified service agency.
6. Inspect any accessories attached to the furnace such as a humidifier or electronic air cleaner. Perform any service or maintenance to the accessories as recommended in the accessory instructions.

Cleaning and/or Replacing Air Filter

The air filter arrangement will vary depending on the application. The filter is exterior to the furnace casing.

NOTE: If the filter has an airflow direction arrow, the arrow must point towards the blower.

To clean or replace filters, proceed as follows:

⚠ WARNING

ELECTRICAL SHOCK, FIRE OR EXPLOSION HAZARD

Failure to follow this warning could result in personal injury or death, or property damage.

Before installing, modifying, or servicing system, main electrical disconnect switch must be in the OFF position and install a lockout tag. There may be more than one disconnect switch. Lock out and tag switch with a suitable warning label. Verify proper operation after servicing. Always reinstall access doors after completing service and maintenance.

1. Turn off electrical supply to furnace before removing filter access door.
2. Remove filter cabinet door.
3. Slide filter out of cabinet.
4. If equipped with permanent, washable 3/4-in. (19 mm) filter, clean filter by spraying cold tap water through filter in opposite direction of airflow. Rinse filter and let dry. Oiling or coating of the filter is not recommended. See Table 19 for size information.
5. If equipped with factory-specified disposable media filter, replace only with media filter having the same part number and size. For expandable replacement media, refer to the instructions included with the replacement media.
6. Slide filter into cabinet.
7. Replace filter cabinet door.
8. Turn on electrical supply to furnace.

Table 19 – Filter Size Information - In. (mm)

FURNACE CASING WIDTH	FILTER SIZE		FILTER TYPE
	SIDE RETURN	BOTTOM RETURN	
14-1/2 (368)	16 X 25 X 3/4 (406 X 635 X 19)	14 X 25 X 3/4 (356 X 635 X 19)	Washable*
17-1/2 (445)	16 X 25 X 3/4 (406 X 635 X 19)	16 X 25 X 3/4 (406 X 635 X 19)	Washable*
21 (533)	16 X 25 X 3/4 (406 X 635 X 19)	20 X 25 X 3/4 (508 X 635 X 19)	Washable*
24 (610)	16 X 25 X 3/4 (406 X 635 X 19)	24 X 25 X 3/4 (610 X 635 X 19)	Washable*

* Recommended

Blower Motor and Wheel Maintenance

The following steps should be performed by a qualified service agency.

To ensure long life and high efficiency, clean accumulated dirt and grease from blower wheel and motor annually.

The inducer and blower motors are pre-lubricated and require no additional lubrication. These motors can be identified by the absence of oil ports on each end of the motor.

⚠ WARNING

ELECTRICAL SHOCK HAZARD

Failure to follow this warning could result in personal injury or death.

Blower access door switch opens 115-V power to control. No component operation can occur unless switch is closed. Caution must be taken when manually closing this switch for service purposes.

NOTE: The blower wheel should not be dropped or bent as balance will be affected.

Clean blower motor and wheel as follows:

1. Turn off electrical supply to furnace.
2. Remove outer door.
3. For downflow or horizontal furnaces having vent pipes within the furnace that pass in front of the blower access door:
   a. Disconnect vent connector from furnace vent elbow.
   b. Disconnect and remove short piece of vent pipe from within furnace.
4. Remove screws from blower access door and remove blower access door.
5. All factory wires can be left connected, but field thermostat connections may need to be disconnected depending on their length and routing.
6. Remove 2 screws holding blower assembly to blower deck and slide blower assembly out of furnace.
7. Clean blower wheel and motor using a vacuum with soft brush attachment. Blower wheel blades may be cleaned with a small paint or flux brush. Do not remove or disturb balance weights (clips) on blower wheel blades.
8. Vacuum any loose dust from blower housing, wheel and motor.
9. If a greasy residue is present on blower wheel, remove wheel from the blower housing and wash it with an appropriate degreaser.

NOTE: Before disassembly, mark blower mounting arms, motor, and blower housing so motor and each arm is positioned at the same location during reassembly.

To remove wheel:

   a. Disconnect ground wire attached to blower housing.
   b. Remove screws securing cutoff plate and remove cutoff plate from housing.
   c. Loosen set screw holding blower wheel on motor shaft (160+/-20 in.-lb. when assembling).
   d. Remove bolts holding motor to blower housing and slide motor out of wheel (40+/-10 in.-lb. when reassembling).
   e. Remove blower wheel from housing.
   f. Clean wheel and housing.

10. Reassemble motor and blower by reversing steps 9a, through 9e. Be sure to reattach ground wire to the blower housing.
11. Verify that blower wheel is centered in blower housing and set screw contacts the flat portion of the motor shaft. Loosen set screw on blower wheel and reposition if necessary.
12. Spin the blower wheel by hand to verify that the wheel does not rub on the housing.
13. Reinstall blower assembly in furnace.
14. Reinstall 2 screws securing blower assembly to blower deck.
15. Reconnect blower leads to furnace control. Refer to furnace wiring diagram, and connect thermostat leads if previously disconnected.
16. To check blower for proper rotation:
    a. Turn on electrical supply.

⚠ WARNING

ELECTRICAL SHOCK HAZARD

Failure to follow this warning could result in personal injury, or death.

Blower access door switch opens 115-V power to furnace control. No component operation can occur unless switch is closed. Exercise caution to avoid electrical shock from exposed electrical components when manually closing this switch for service purposes.

   b. Manually close blower access door switch.

NOTE: If R-W thermostat terminals are jumpered at the time blower access door switch is closed, blower will run for 90 sec before beginning a heating cycle.

   c. Perform component self-test as shown at the bottom of the SERVICE label, located on the front of blower access door.
   d. Verify blower is rotating in the correct direction

17. If furnace is operating properly, RELEASE BLOWER ACCESS DOOR SWITCH. Remove any jumpers or reconnect any disconnected thermostat leads. Replace blower access door.
18. Downflow or horizontal furnaces with vent pipe through furnace only:
    a. Install and connect short piece of vent pipe inside furnace to existing vent.
    b. Connect vent connector to vent elbow.
19. Reinstall outer door.

20. Turn on gas supply and cycle furnace through one complete heating and cooling cycle. Verify the furnace temperature rise as shown in Adjustments Section. Adjust temperature rise as shown in Adjustments Section. If outdoor temperature is below 70°F, turn off circuit breaker to outdoor unit before running furnace in the cooling cycle. Turn outdoor circuit breaker on after completing cooling cycle.

Cleaning Heat Exchanger

The following steps should be performed by a qualified service agency.

NOTE: If the heat exchangers get a heavy accumulation of soot and carbon, they should be replaced rather than trying to clean them thoroughly. A build-up of soot and carbon indicates that a problem exists which needs to be corrected, such as improper adjustment of manifold pressure, insufficient or poor quality combustion air, incorrect size or damaged manifold orifice(s), improper gas, or a restricted heat exchanger. Action must be taken to correct the problem.

If it becomes necessary to clean the heat exchangers because of dust or corrosion, proceed as follows:

1. Turn OFF gas and electrical power to furnace.
2. Remove outer access door.
3. Disconnect vent connector from furnace vent elbow.
4. For downflow or horizontal furnace having an internal vent pipe, remove internal vent pipe within the casing.
5. Disconnect wires to the following components. Mark wires to aid in reconnection (be careful when disconnecting wires from switches because damage may occur):
   a. Draft safeguard switch.
   b. Inducer motor.
   c. Pressure switches.
   d. Limit over temperature switch.
   e. Gas valve.
   f. Hot surface igniter.
   g. Flame-sensing electrode.
   h. Flame rollout switches.
6. Remove screws that fasten the collector box assembly to the cell panel. Be careful not to damage the collector box. Inducer assembly and elbow need not be removed from collector box.
7. Disconnect gas line from gas manifold.
8. Remove the four screws that attach the burner assembly to the cell panel. The gas valve and individual burners need not be removed from support assembly. Remove NOx baffles, if installed.

NOTE: Be very careful when removing burner assembly to avoid breaking igniter. See Fig. 49 and Fig. 50 for correct igniter location.

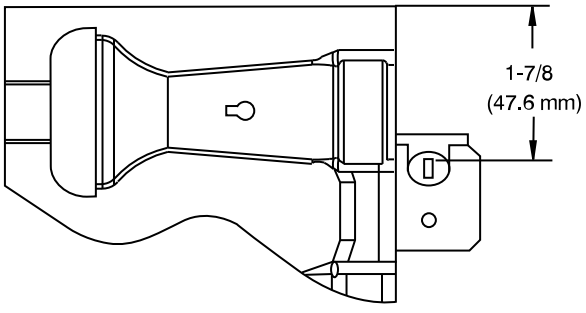

A05026

Fig. 49 – Igniter Position - Top View

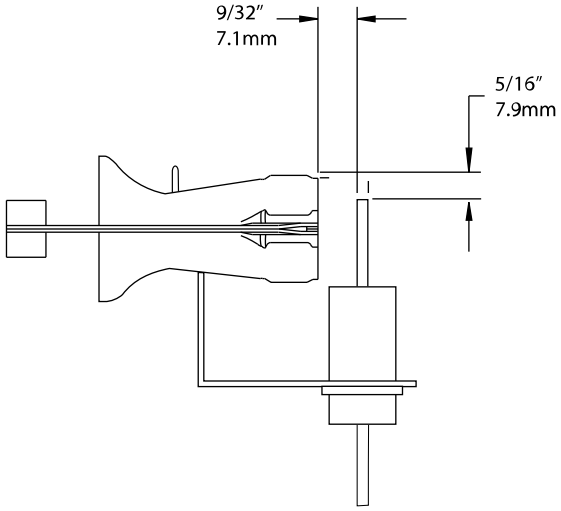

A05025

Fig. 50 – Igniter Position - Side View

NOTE: The materials needed in item 9 can usually be purchased at local hardware stores.

9. Using field-provided 25-caliber rifle cleaning brush; a 36-in. (914 mm) long, 1/4-in. (6 mm) diameter steel spring cable; and a variable speed drill, do the following:
   a. Remove metal screw fitting from wire brush to allow insertion into cable.
   b. Insert the twisted wire end of brush into end of spring cable, and crimp tight with crimping tool or crimp by striking with ball-peen hammer. TIGHTNESS IS VERY IMPORTANT.
      (1.) Attach variable-speed, reversible drill to the end of spring cable (end opposite brush).
      (2.) Insert brush end of cable into the outlet opening of cell and slowly rotate with drill. DO NOT force cable. Gradually insert cable into upper pass of cell, see Fig. 51.

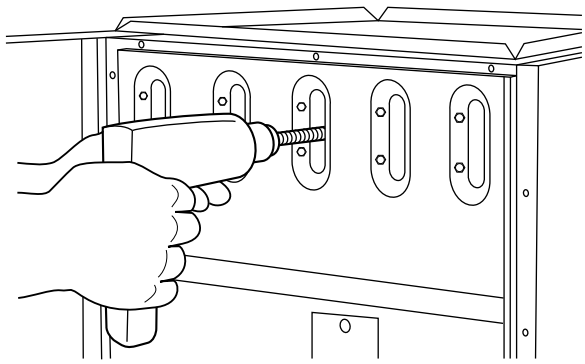

A91252

Fig. 51 – Cleaning Heat Exchanger Cell

      (3.) Work cable in and out of cell 3 or 4 times to obtain sufficient cleaning. DO NOT pull cable with great force. Reverse drill and gradually work cable out.
      (4.) Insert brush end of cable in burner inlet opening of cell, and proceed to clean 2 lower passes of cell in same manner as upper pass.
      (5.) Repeat foregoing procedures until each cell in furnace has been cleaned.
      (6.) Using vacuum cleaner, remove residue from each cell.
      (7.) Using vacuum cleaner with soft brush attachment, clean burner assembly.
      (8.) Clean flame sensor with fine steel wool.
      (9.) Reinstall burner assembly. Center burners in cell openings.
10. Remove old sealant from cell panel and collector box flange.

11. Spray releasing agent on the heat exchanger cell panel where collector box assembly contacts cell panel.

NOTE: A releasing agent such as cooking spray or equivalent (must not contain corn or canola oil, aromatic or halogenated hydrocarbons or inadequate seal may occur) and RTV sealant (G.E. 162, 6702, or Dow-Corning 738) are needed before starting installation. DO NOT substitute any other type of RTV sealant. G.E. 162 (P771-9003) is available through RCD in 3-oz tubes.

12. Apply new sealant to flange of collector box and attach to cell panel using existing screws, making sure all screws are secure.
13. Reconnect wires to the following components (Use connection diagram on wiring label, if wires were not marked for reconnection locations.):
    a. Draft safeguard switch.
    b. Inducer motor.
    c. Pressure switches.
    d. Limit over temperature switch.
    e. Gas valve.
    f. Hot surface igniter.
    g. Flame-sensing electrode.
    h. Flame rollout switches.
14. Reinstall internal vent pipe, if applicable.
15. Reinstall vent connector on furnace vent elbow. Securely fasten vent connector to vent elbow with 2 field-supplied, corrosion-resistant, sheet metal screws located 180° apart.
16. Replace blower access door only if it was removed.
17. Set thermostat above room temperature and check furnace for proper operation.
18. Verify blower airflow and speed changes between heating and cooling.
19. Check for gas leaks.

⚠ WARNING

FIRE OR EXPLOSION HAZARD

Failure to follow this warning could result in personal injury, death, and/or property damage.

Never purge a gas line into a combustion chamber. Never test for gas leaks with an open flame. Use a commercially available soap solution made specifically for the detection of leaks to check all connections. A fire or explosion may result causing property damage, personal injury or loss of life.

SEQUENCE OF OPERATION

NOTE: Furnace control must be grounded for proper operation or control will lock out. Control is grounded through green/yellow wire routed to gas valve and manifold bracket screw. Using the schematic diagram, follow the sequence of operation through the different modes. Read and follow the wiring diagram very carefully.

NOTE: If a power interruption occurs during a call for heat (W), the control will start a 90-sec blower-only ON period two seconds after power is restored, if the thermostat is still calling for gas heating. The amber LED light will flash code 12 and display will show (12 .) during the 90-sec period, after which the LED will be ON continuous, as long as no faults are detected. After the 90-sec period, the furnace will respond to the thermostat normally.

The blower door must be installed for power to be conducted through the blower door interlock switch ILK to the furnace control CPU, transformer TRAN, inducer motor IDM, blower motor BLWM, hot-surface igniter HSI, and gas valve GV.

1. **Heating**

   The wall thermostat “calls for heat,” closing the R-to-W circuit. The furnace control performs a self-check, verifies the pressure switch contacts PRS are open, and starts the inducer motor IDM.

   a. **Inducer Prepurge Period**- As the inducer motor IDM comes up to speed, the pressure switch contacts PRS close, 24 VAC power is supplied for a field installed humidifier at the HUM terminal and the control begins a 15-sec prepurge period.
   b. **Igniter Warm-Up**- At the end of the prepurge period, the Hot-Surface igniter HSI is energized for a 17-second igniter warm-up period.
   c. **Trial-for-Ignition Sequence**- When the igniter warm-up period is completed, the main gas valve relay contacts GVR close to energize the gas valve GV, the gas valve opens, The gas valve GV permits gas flow to the burners where it is ignited by the HSI. Five seconds after the GVR closes, a 2-second flame proving period begins. The HSI igniter will remain energized until the flame is sensed or until the 2-second flame proving period begins.
   d. **Flame-Proving** – When the burner flame is proved at the flame-proving sensor electrode FSE, the furnace control CPU begins the blower-ON delay period and continues to hold the gas valve GV open. If the burner flame is not proved within two seconds, the control CPU will close the gas valve GV, and the control CPU will repeat the ignition sequence for up to three more Trials-For-Ignition before going to Ignition-Lockout. **Lockout will be reset** automatically after three hours or by momentarily interrupting 115 VAC power to the furnace, or by interrupting 24 VAC power at SEC1 or SEC2 to the furnace control CPU (not at W, G, R, etc.) If flame is proved when flame should not be present, the furnace control CPU will lock out of Gas-Heating mode and operate the inducer motor IDM until flame is no longer proved.
   e. **Blower-ON Delay**- If the burner flame is proven, the blower motor is turned on at HEAT speed 25 sec after the gas valve GV is energized.
      Simultaneously, the electronic air cleaner terminal EAC-1 is energized and remains energized as long as the blower motor BLWM is energized.
   f. **Heat-OFF Delay**- When the thermostat is satisfied, the R-to-W circuit is opened, de-energizing the gas valve GV, stopping gas flow to the burners. The inducer motor IDM will remain energized for a 5-second post-purge period, after which the inducer motor IDM will stop and de-energize the humidifier terminal. The blower motor BLWM and air cleaner terminal EAC-1 will remain energized for 90, 120, 150, or 180 seconds (depending on the HEAT-OFF delay selection). The furnace control CPU is factory-set for a 120-second Heat-OFF Delay.

2. **Cooling mode**

   The thermostat “calls for cooling”.

   a. **Single-Speed Cooling**-
      The thermostat closes the R-to-G-and-Y circuits. The R-to- Y circuit starts the outdoor unit, and the R-to-G-and-Y/Y2 circuits start the furnace blower motor BLWM on high cooling airflow. High cooling airflow is based on the high cooling speed (CL2) selection. The electronic air cleaner terminal EAC-1 is energized with 115 VAC when the blower motor BLWM is operating. When the thermostat is satisfied, the R-to-G-and-Y circuits are opened. The outdoor unit will stop, and the furnace blower motor BLWM will continue operating at cooling airflow for an additional 5, 30, or 90 seconds (depending on the cooling blower-OFF delay (Cod) setting). The furnace CPU is factory set for a 90 second cooling blower-OFF delay. See Fig. 45.
   b. **Single-Stage Thermostat and Two-Speed Cooling**
      This furnace can operate a two-speed cooling unit with a single-stage thermostat because the furnace control CPU includes a programmed adaptive sequence of controlled

operation, which selects low-cooling or high-cooling operation. This selection is based upon the stored history of the length of previous cooling period of the single-stage thermostat.

NOTE: (CtE) is set to (15t) to enable the adaptive cooling mode in response to a call for cooling, see Fig. 45. When (CtE) is set to (15t) the furnace control CPU can turn on the air conditioning relay ACR to energize the Y/Y2 terminal and switch the outdoor unit to high-cooling.

The furnace control CPU can start up the cooling unit in either low- or high-cooling. If starting up in low-cooling, the furnace control CPU determines the low-cooling on-time (from 0 to 20 minutes) which is permitted before switching to high-cooling. If the power is interrupted, the stored history is erased and the furnace control CPU will select low-cooling for up to 20 minutes and then energize the air conditioning relay ACR to energize the Y/Y2 terminal and switch the outdoor unit to high-cooling, as long as the thermostat continues to call for cooling. Subsequent selection is based on stored history of the thermostat cycle times.

The wall thermostat "calls for cooling", closing the R-to-G-and-Y circuits. The R-to-Y1 circuit starts the outdoor unit on low-cooling speed, and the R-to-G-and-Y1 circuits starts the furnace blower motor BLWM at low-cooling airflow. Low cooling airflow is based on cooling blower speed (CL 1) selection, see Fig. 45.

If the furnace control CPU switches from low-cooling to high-cooling, the furnace control CPU will energize the air conditioning relay ACR. When the air conditioning relay ACR is energized the R-to-Y1-and-Y2 circuits switch the outdoor unit to high-cooling speed, and the R-to-G-and-Y1-and-Y/Y2 circuits transition the furnace blower motor BLWM to high-cooling airflow. High cooling airflow is based on cooling blower speed (CL2) selection, see Fig. 45.

The electronic air cleaner terminal EAC-1 is energized with 115 VAC whenever the blower motor BLWM is operating.

When the thermostat is satisfied, the R-to-G-and-Y circuit are opened. The outdoor unit stops, and the furnace blower BLWM and electronic air cleaner terminal EAC-1 will remain energized for an additional 5, 30, or 90 seconds (depending on the cooling blower-OFF delay (Cod) setting). The furnace CPU is factory set for a 90 second cooling blower-OFF delay. See Fig. 45.

c. **Two-Stage Thermostat and Two-Speed Cooling**

See Fig. 30 for thermostat connections

NOTE: (CtE) is set to (25t) to allow thermostat control of the outdoor unit staging, see Fig. 45.

The thermostat closes the R-to-G-and-Y1 circuits for low-cooling or closes the R-to-G-and-Y1-and-Y2 circuits for high-cooling. The R-to-Y1 circuit starts the outdoor unit on low-cooling speed, and the R-to-G-and-Y1 circuit starts the furnace blower motor BLWM at low-cooling airflow based on low cooling blower speed (CL 1) selection. The R-to-Y1-and-Y2 circuits start the outdoor unit on high-cooling speed, and the R-to- G-and-Y/Y2 circuits start the furnace blower motor BLWM at high-cooling airflow. High-cooling airflow is based on high cooling blower speed (CL2) selection, see Fig. 45.

The electronic air cleaner terminal EAC-1 is energized with 115 VAC whenever the blower motor BLWM is operating.

When the thermostat is satisfied, the R-to-G-and-Y1 or R-to-G-and-Y1-and-Y2 circuits are opened. The outdoor unit stops, and the furnace blower BLWM and electronic air cleaner terminal EAC-1 will remain energized for an additional 90 seconds. See Fig. 45.

3. **Dehumidification Mode**

See Fig. 30 for thermostat connections.

The dehumidification output, DHUM on the thermostat should be connected to the furnace control thermostat terminal DHUM. When there is a dehumidify demand, the DHUM input is activated, which means 24 VAC signal is removed from the DHUM input terminal. In other words, the DHUM input logic is reversed. The DHUM input is turned ON when no dehumidify demand exists. Once 24 VAC is detected by the furnace control on the DHUM input, dehumidification capability is activated. If the DHUM input is low for more than 48 hours, the furnace control reverts back to non-dehumidification.

The cooling operation described in item 3. above also applies to operation with a thermostat with humidity control. The exceptions are listed below:

a. **Low cooling**-When the R-to-G-and-Y1 circuit is closed and there is a demand for dehumidification, the low cooling airflow demand is reduced by 10 percent.

b. **High cooling**-When the R-to-G-and Y/Y2 circuit is closed and there is a demand for dehumidification, the high cooling airflow demand is reduced by 10 percent.

c. **Cooling OFF-delay**-When the "call for cooling" is satisfied and there is a demand for dehumidification, the cooling blower-off delay is decreased from its normal setting based on (Cod) to 5 seconds.

4. **Continuous Fan Mode**

When the R-to-G circuit is closed by the thermostat, the blower motor BLWM will operate at continuous fan airflow. Continuous fan airflow selection is initially based on the CF (continuous fan) selection shown in Fig. 45. Factory default is shown in Table 11. Terminal EAC-1 is energized as long as the blower motor BLWM is energized.

During a call for heat, the furnace control CPU will transition the blower motor BLWM to continuous fan airflow or heat airflow whichever is lowest. The blower motor BLWM will remain ON until the main burners ignite then shut OFF and remain OFF for the blower-ON delay (25 seconds in heat), allowing the furnace heat exchangers to heat up more quickly, then restarts at the end of the blower-ON delay period at heat.

The blower motor BLWM will revert to continuous fan airflow after the heating cycle is completed.

When the thermostat "calls for low-cooling", the blower motor BLWM will switch to operate at low-cooling airflow. When the thermostat is satisfied, the blower motor BLWM will operate an additional 90 seconds at low-cooling airflow before transitioning back to continuous fan airflow.

When the thermostat "calls for high-cooling", the blower motor BLWM will operate at high cooling airflow. When the thermostat is satisfied, the blower motor BLWM will operate an additional 90 seconds at high-cooling airflow before transitioning back to continuous-blower airflow. When the R-to-G circuit is opened, the blower motor BLWM will continue operating for an additional 5 seconds, if no other function requires blower motor BLWM operation.

If the blower-off delay is set to the maximum, the adjustable continuous-fan feature is locked (i.e., fan speed cannot be changed from its current setting).

The primary continuous fan airflow (CFn) can be selected using the 3-digit display/pushbuttons or via the service tech app. Refer to the FURNACE CONTROL PROGRAMMING AND NAVIGATION section of this manual for instructions on adjusting the continuous fan speed via the control board interface. Alternate continuous fan airflows, (CF2 and CF3), can only be modified via the service tech app.

Setting Active Continuous Fan Speed.

Method 1: If the G input (or FAN switch/setting at the thermostat) is turned OFF for 1 to 3 seconds and then back ON, the active continuous fan speed will cycle to the next speed (CFn→CF2). Repeating will change the active continuous fan speed to the next speed (CF2→CF3). Repeating again will set the active continuous fan back to the primary speed (CFn). This method is intended as a way for home owners to adjust the continuous fan speed setting from the thermostat depending on their needs.

Method 2: The active continuous fan speed (CFn, CF2 or CF3) can be selected via the service tech app.

5. **Heat pump**
   See Fig. 24 for thermostat connections.
   When installed with a heat pump, the furnace control automatically changes the timing sequence to avoid long blower off times during demand defrost cycles. Whenever W is energized along with Y1 or Y/Y2, the furnace control CPU will transition to or bring on the blower motor BLWM at cooling airflow or low-heat airflow, whichever is lowest. The blower motor BLWM will remain on until the main burners ignite then shut OFF and remain OFF for 25 seconds before coming back on at heating airflow. When the W input signal disappears, the furnace control begins a normal inducer post-purge period while changing the blower airflow. If Y/Y2 input is still energized the furnace control CPU will transition the blower motor BLWM airflow to cooling airflow. If Y/Y2 input signal disappears and the Y1 input is still energized the furnace control CPU will transition the blower motor BLWM to low-cooling airflow. If both the Y1 and Y/Y2 signals disappear at the same time, the blower motor BLWM will remain on at low-heat airflow for the selected blower-OFF delay period. At the end of the blower-OFF delay, the blower motor BLWM will shut OFF unless G is still energized, in which case the blower motor BLWM will operate at continuous fan airflow.

Wiring Diagram

Refer to Fig. 47 for wiring diagram.

Troubleshooting

Refer to the service label (see Fig. 46). The Troubleshooting Guide (see Fig. 52) can be a useful tool in isolating furnace operation problems. Beginning with the word “Start,” answer each question and follow the appropriate arrow to the next item. The Guide will help to identify the problem or failed component. After replacing any component, verify correct operation sequence.

TROUBLESHOOTING GUIDE

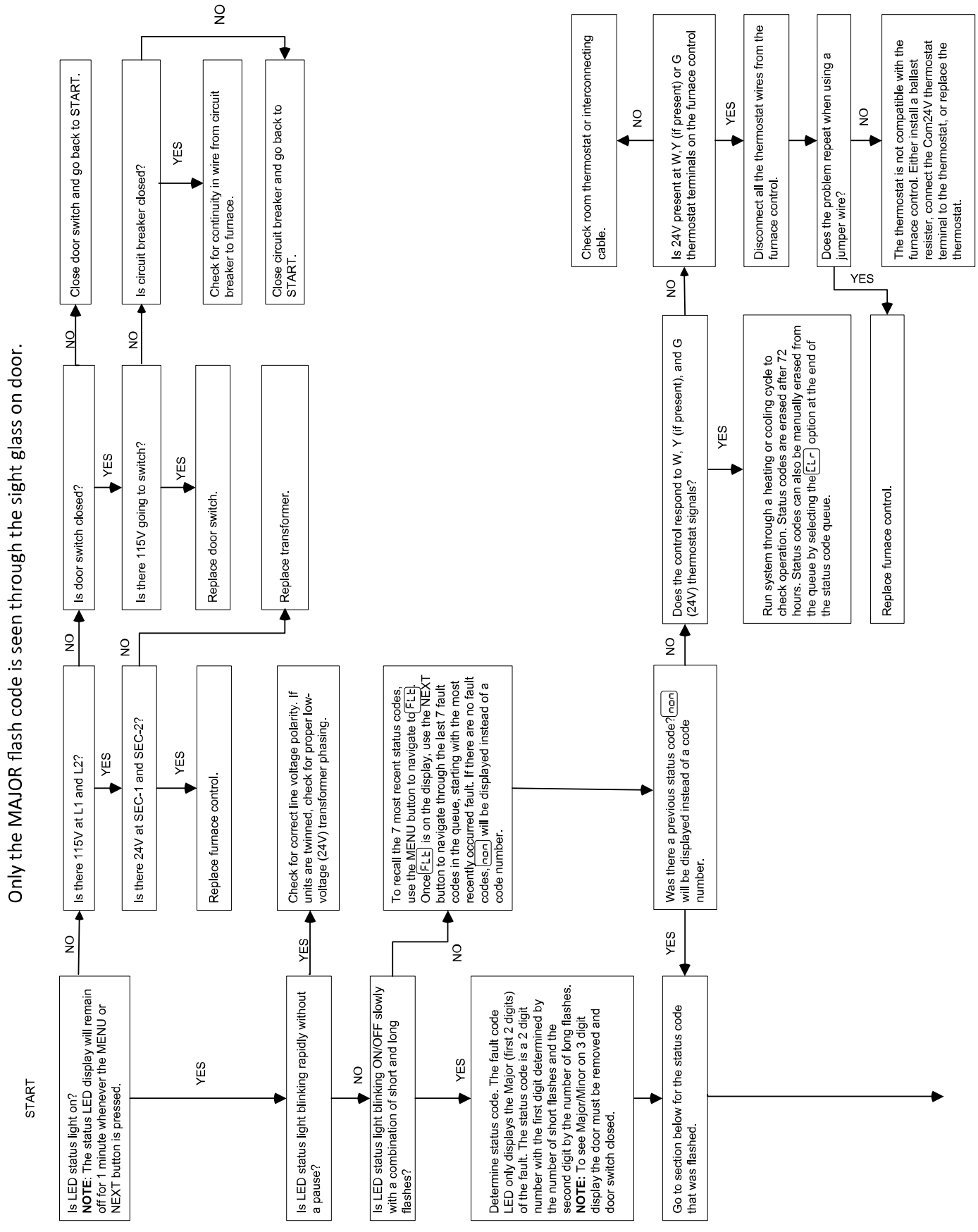

A221554

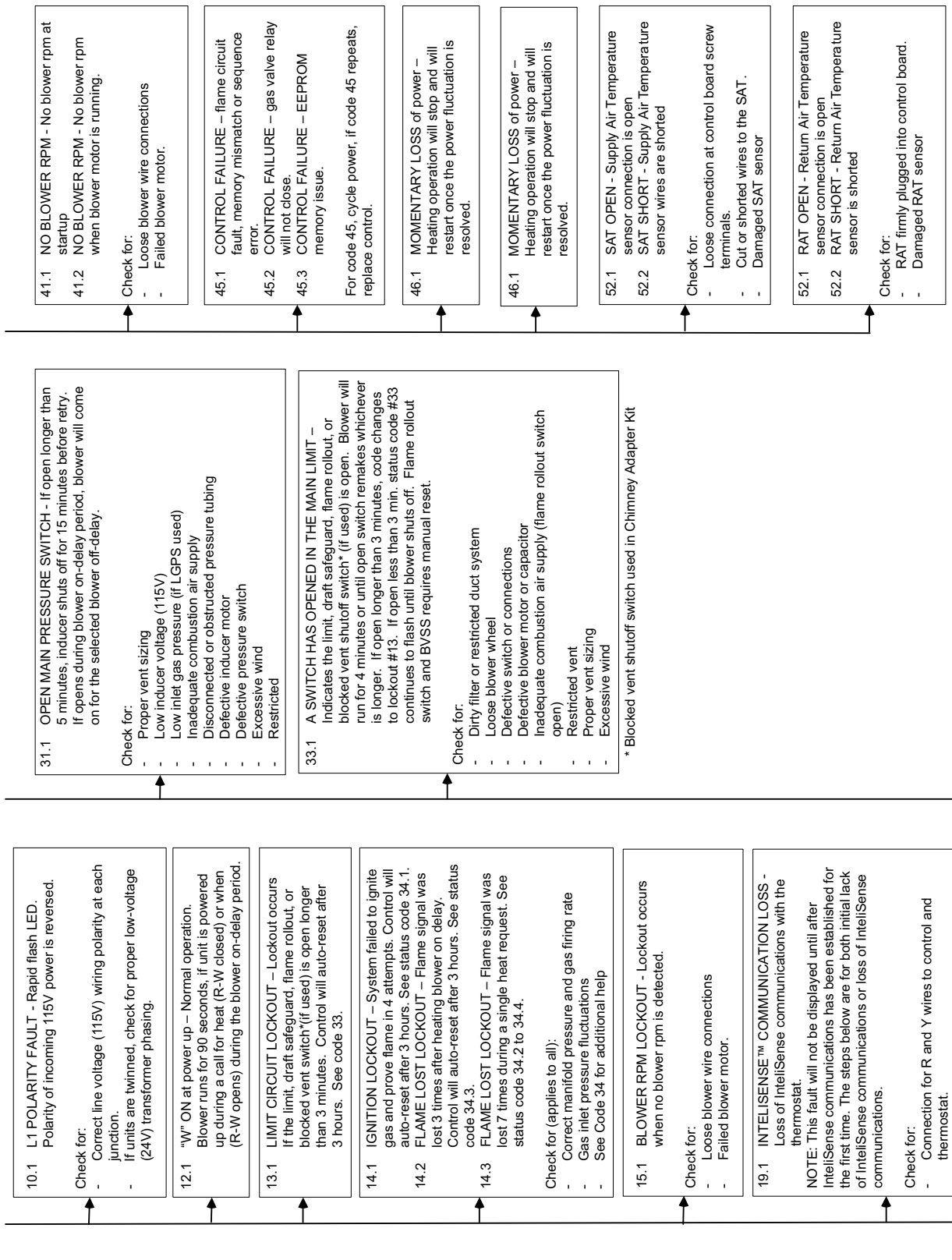
Only the MAJOR flash code is seen through the sight glass on door.
10.1 L1 POLARITY FAULT - Rapid flash LED. Polarity of incoming 115V power is reversed.
Check for:
- Correct line voltage (115V) wiring polarity at each junction.
- If units are twinned, check for proper low-voltage (24V) transformer phasing.
12.1 "W" ON at power up – Normal operation. Blower runs for 90 seconds, if unit is powered up during a call for heat (R-W closed) or when (R-W opens) during the blower on-delay period.
13.1 LIMIT CIRCUIT LOCKOUT – Lockout occurs If the limit, draft safeguard, flame rollout, or blocked vent switch*(if used) is open longer than 3 minutes. Control will auto-reset after 3 hours. See code 33.
14.1 IGNITION LOCKOUT – System failed to ignite gas and prove flame in 4 attempts. Control will auto-reset after 3 hours. See status code 34.1.
14.2 FLAME LOST LOCKOUT – Flame signal was lost 3 times after heating blower on delay. Control will auto-reset after 3 hours. See status code 34.3.
14.3 FLAME LOST LOCKOUT – Flame signal was lost 7 times during a single heat request. See status code 34.2 to 34.4.
Check for (applies to all):
- Correct manifold pressure and gas firing rate
- Gas inlet pressure fluctuations
- See Code 34 for additional help
15.1 BLOWER RPM LOCKOUT - Lockout occurs when no blower rpm is detected.
Check for:
- Loose blower wire connections
- Failed blower motor.
19.1 INTELISENSE™ COMMUNICATION LOSS - Loss of InteliSense communications with the thermostat.
NOTE: This fault will not be displayed until after InteliSense communications has been established for the first time. The steps below are for both initial lack of InteliSense communications or loss of InteliSense communications.
Check for:
- Connection for R and Y wires to control and thermostat.
- Refer to thermostat advanced installation and configuration instructions found at Carrier.hvacpartners.com/InteliSense for system setup and troubleshooting tips.
31.1 OPEN MAIN PRESSURE SWITCH - If open longer than 5 minutes, inducer shuts off for 15 minutes before retry. If opens during blower on-delay period, blower will come on for the selected blower off-delay.
Check for:
- Proper vent sizing
- Low inducer voltage (115V)
- Low inlet gas pressure (if LGPS used)
- Inadequate combustion air supply
- Disconnected or obstructed pressure tubing
- Defective inducer motor
- Defective pressure switch
- Excessive wind
- Restricted
33.1 A SWITCH HAS OPENED IN THE MAIN LIMIT – Indicates the limit, draft safeguard, flame rollout, or blocked vent shutoff switch* (if used) is open. Blower will run for 4 minutes or until open switch remakes whichever is longer. If open longer than 3 minutes, code changes to lockout #13. If open less than 3 min. status code #33 continues to flash until blower shuts off. Flame rollout switch and BVSS requires manual reset.
Check for:
- Dirty filter or restricted duct system
- Loose blower wheel
- Defective switch or connections
- Defective blower motor or capacitor
- Inadequate combustion air supply (flame rollout switch open)
- Restricted vent
- Proper vent sizing
- Excessive wind
* Blocked vent shutoff switch used in Chimney Adapter Kit
41.1 NO BLOWER RPM - No blower rpm at startup
41.2 NO BLOWER RPM - No blower rpm when blower motor is running.
Check for:
- Loose blower wire connections
- Failed blower motor.
45.1 CONTROL FAILURE – flame circuit fault, memory mismatch or sequence error.
45.2 CONTROL FAILURE – gas valve relay will not close.
45.3 CONTROL FAILURE – EEPROM memory issue.
For code 45, cycle power, if code 45 repeats, replace control.
46.1 MOMENTARY LOSS of power – Heating operation will stop and will restart once the power fluctuation is resolved.
46.1 MOMENTARY LOSS of power – Heating operation will stop and will restart once the power fluctuation is resolved.
52.1 SAT OPEN - Supply Air Temperature sensor connection is open
52.2 SAT SHORT - Supply Air Temperature sensor wires are shorted
Check for:
- Loose connection at control board screw terminals.
- Cut or shorted wires to the SAT.
- Damaged SAT sensor
52.1 RAT OPEN - Return Air Temperature sensor connection is open
52.2 RAT SHORT - Return Air Temperature sensor is shorted
Check for:
- RAT firmly plugged into control board.
- Damaged RAT sensor

A221555

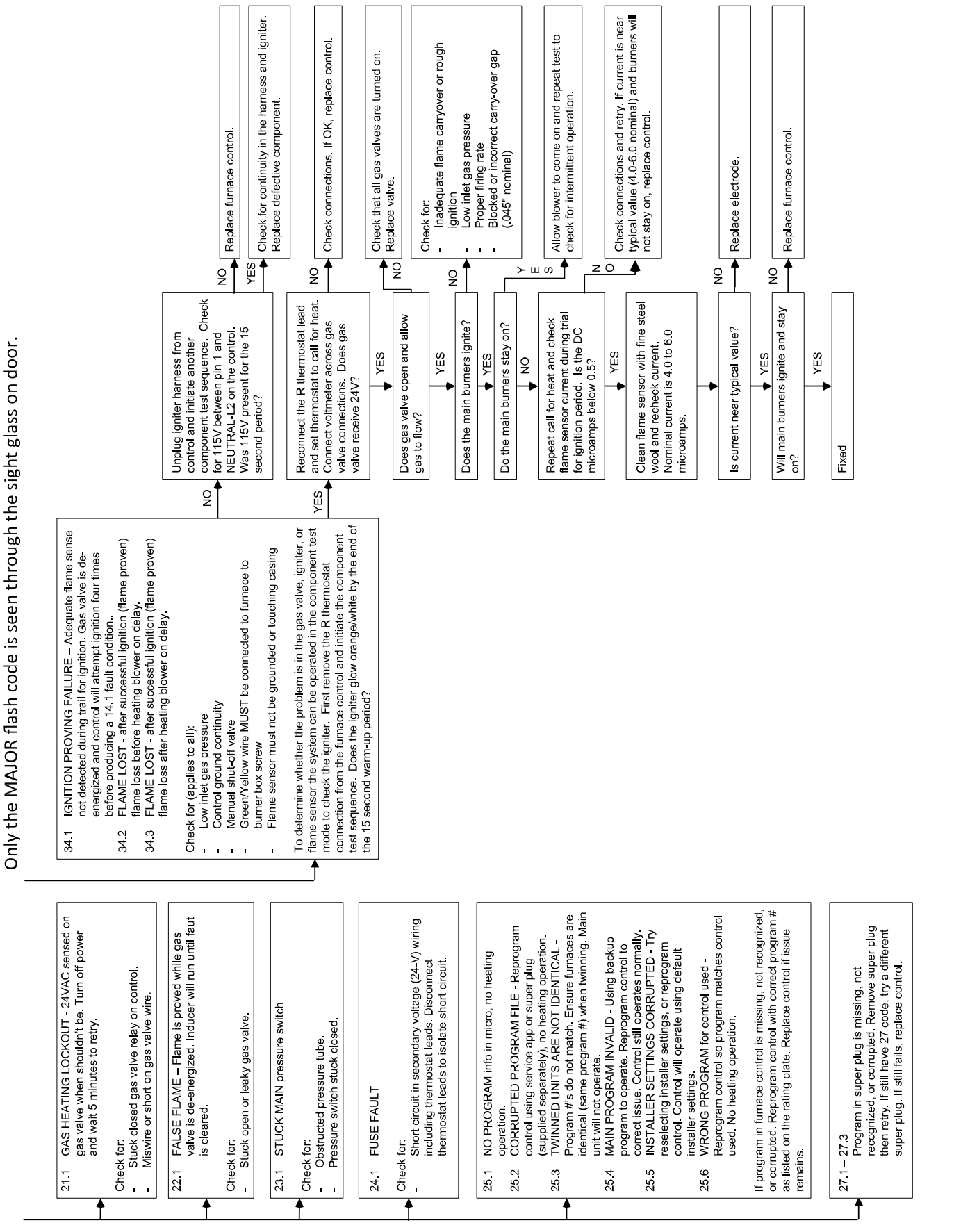

A221605

Fig. 52 – Troubleshooting Guide

GAS FURNACE CHECKLIST

GAS FURNACE CHECKLIST

Installation Date: _____

Equipment		
	Model	Serial #
Furnace		
Thermostat		
Humidifier		
Indoor Coil		
Outdoor Unit		

Furnace Location_____ Installed altitude _____

Furnace Orientation: ____Upflow ___Downflow ___Horizontal Right ___Horizontal Left

Inspect unit to ensure that all unused casing openings have knockouts or casing plugs.

Gas Adjustment

LOCAL GAS HEAT CONTENT_____(btu/cu. ft.) SPECIFIC GRAVITY_____/cu. ft.
(contact your local gas utility-not required for propane)

INLET SUPPLY PRESSURE** _____ in. w.c. ORIFICE #_____
MANIFOLD PRESSURE: High fire_____ in. w.c. Low fire_____ in. w.c.
**Supply pressure should be checked with furnace and all other gas appliances running

FIRING RATE: (CLOCKED METER FOR NAT. GAS – assure only furnace is running)
Firing rate = heat content (btu/cu. ft.) X size of the dial (cu. ft/rev) X # of rev. per 60 sec (rev/sec) X 3600 (sec/hr)
Example- (1050 btu/cu. ft.) X (0.5 cu. ft./rev.) X (2 revs./60sec) X (3600 sec/hr)= 63,000 btu/hr
OR use the "Gas Rate" chart in the startup and adjustment section of the installation manual

HIGH HEAT_____ btu/hr LOW HEAT _____ btu/hr

LEAVING AIR TEMPERATURE _____(F) high _____ (F) low

RETURN AIR TEMPERATURE _____(F) high _____ (F) low

TEMPERATURE RISE _____(F) high _____ (F) low

Temperature rise is equal to the supply air temp minus the return air temp @ steady state operation.
The supply temperature should be measured away from the line of sight of the Heat Exchanger

+90 % VENTING SYSTEM

Pipe Dia_____ # of Elbows_____ Total Length _____ft.

Termination Type: (circle one) Concentric 2 pipe (std)

Termination Location: (circle one) Roof Sidewall

MID-EFFICIENCY VENTING SYSTEM

METAL: (circle one) B vent Chimney Liner

Vent Dia_____Total Ht._____ft. Vent Conn. Dia_____ Conn. Length _____ft. # of Elbows_____

Connector Type: Single Wall B Vent Connector Rise Above Furnace _____ft.

A230014

Fig. 53 – Gas Furnace Checklist

PARTS REPLACEMENT INFORMATION GUIDE

CASING GROUP

Outer door and Blower door
Top filler plate
Bottom filler plate
Bottom enclosure

ELECTRICAL GROUP

Control bracket
Junction box
Limit switch(es)
Circuit board
Super plug
Door switch
Transformer
Wiring harness 115v
Wiring harness 24v

BLOWER GROUP

Blower cutoff and Blower motor
Blower housing
Blower wheel
Grommet and Power choke (where used)

GAS CONTROL GROUP

Manifold
Burner assembly
Orifice
Flame sensor
Hot surface igniter
Gas valve
Manual reset limit switches
Burner support assembly

HEAT EXCHANGER GROUP

Heat exchanger cell
Cell panel
Lox NOx baffle (California models only)

INDUCER GROUP

Inducer motor and Inducer wheel
Pressure switch
Housing assembly
Vent elbow assembly
Draft safeguard switch

TO OBTAIN INFORMATION ON PARTS: Consult your installing dealer or classified section of your local telephone directory under “Heating Equipment” or “Air Conditioning Contractors and Systems” headings for dealer listing by brand name or contact:

CARRIER CORPORATION
Consumer Relations Department
P.O. Box 4808
Syracuse, New York 13221-4808
1-800-CARRIER

Have available the model number, series number, and serial number located on the unit rating plate to ensure correct replacement part.

MODEL NOMENCLATURE

MODEL	AFUE NOX	MAJOR SERIES	HTG INPUT	MOTOR TYPE	WIDTH	VOLTAGE	MINOR SERIES	CLG CAPACITY
58SP	0	B	070	V	17	-	-	16

TRAINING

My Learning Center is your central location for professional residential HVAC training resources that help strengthen careers and businesses. We believe in providing high quality learning experiences both online and in the classroom.

Access My Learning Center with your HVACpartners credentials at www.mlctraining.com.
Please contact us a mylearning@carrier.com with questions.

⚠ WARNING

FIRE, EXPLOSION, ELECTRICAL SHOCK AND CARBON MONOXIDE POISONING HAZARD

Failure to follow this warning could result in dangerous operation, personal injury, death or property damage.

Improper installation, adjustment, alteration, service, or maintenance can cause personal injury, property damage, or death. Consult a qualified installer, service agency, or your local gas supplier for information or assistance. The qualified installer or service agency must use only factory-authorized replacement parts, kits, or accessories when modifying this product.

© 2023 Carrier. All rights reserved.
Edition Date: 03/23

Catalog No: 58SP0B-01SI

Replaces: NEW

Manufacturer reserves the right to change, at any time, specifications and designs without notice and without obligations.