27TPA8
Performance™ Series 2-Stage Heat Pump with Puron Advance™ (R-454B) Refrigerant and InteliSense™ Technology 2 - 5 Tons

Carrier®
Turn to the experts

Installation Instructions

NOTE: For use with R-454B indoor units only. Read the entire instruction manual before starting the installation.

Table of Contents

SAFETY CONSIDERATIONS 1
GENERAL 2
INSTALLATION 2
- Check Equipment and Job Site 2
- Install on a Solid, Level Mounting Pad 2
- Clearance Requirements 3
- Operating Ambient 3
- Check Defrost Thermostat 3
- Elevate Unit 3
- Make Piping Connections 4

MANDATORY PIPING REQUIREMENTS 6
- Make Electrical Connections 6
- Compressor Crankcase Heater 8
- Install Electrical Accessories 8
- Airflow Selections (ECM Furnaces) 8
- Airflow Selection for Variable Speed Furnaces (non-communicating) 8
- Airflow Selection for FT5A Fan Coils (non-communicating) 8
- Start-Up 8
- Check Charge 10
- Final Checks 11

TROUBLESHOOTING 12
MAJOR COMPONENTS 12
Repairing Refrigerant Circuit 12
Care and Maintenance 12
TRAINING 12

SAFETY CONSIDERATIONS

The following considerations are critical to upholding safety during installation:

IMPORTANT: This appliance shall only be installed by EPA qualified personnel having appropriate certification. This appliance is not intended for use by persons (including children) with reduced physical, sensory or mental capabilities or lack of experience and knowledge, unless they have been given supervision or instruction concerning use of the appliance by a person responsible for their safety.

Improper installation, adjustment, alteration, service, maintenance, or use can cause explosion, fire, electrical shock, or other conditions which may cause death, personal injury, or property damage. Consult a qualified installer, service agency, or your distributor or branch for information or assistance. The qualified installer or agency must use factory-authorized kits or accessories when modifying this product. Refer to the individual instructions packaged with the kits or accessories when installing.

Follow all safety codes. Wear safety glasses, protective clothing, and work gloves. Use quenching cloth for brazing operations. Have a dry powder or CO_2 fire extinguisher available. Read these instructions thoroughly and follow all warnings or cautions included in literature and attached to the unit. Consult local building codes and current editions of the National Electrical Code (NEC) NFPA 70. In Canada, refer to current editions of the Canadian Electrical Code CSA 22.1.

Proper tools should be used that are designed for the refrigerant of the unit being installed. For A2L refrigerants, non-sparking tools are required. A refrigerant detector should be used prior to and during the installation process to check for leaks. Open flames or other ignition sources should not be present except during brazing. Brazing should only take place on refrigerant tubes open to the atmosphere or have been properly evacuated.

Recognize safety information. This is the safety-alert symbol ⚠ When you see this symbol on the unit and in instructions or manuals, be alert to the potential for personal injury. Understand these signal words; DANGER, WARNING, and CAUTION. These words are used with the safety-alert symbol. **DANGER** identifies the most serious hazards which will result in severe personal injury or death. **WARNING** signifies hazards which could result in personal injury or death. **CAUTION** is used to identify unsafe practices which would result in minor personal injury or product and property damage. **NOTE** is used to highlight suggestions which will result in enhanced installation, reliability, or operation.

⚠ WARNING

ELECTRICAL SHOCK HAZARD

Failure to follow this warning could result in personal injury or death.

Before installing, modifying, or servicing system, main electrical disconnect switch must be in the OFF position. There may be more than 1 disconnect switch. Lock out and tag switch with a suitable warning label.

⚠ WARNING

EXPLOSION HAZARD



Failure to follow this warning could result in death, serious personal injury, death, and/or property damage.

Never use air or any gas containing oxygen for leak testing or operating refrigerant compressors. Never allow compressor suction pressure to operate in a vacuum with service valves closed. See Service Manual for pump-down instructions.

GENERAL

The following are general installation recommendations/NOTES to be observed throughout the installation process:

1. Locate unit away from windows, patios, decks, etc. where unit operation sound may disturb customer.
2. Ensure that vapor and liquid tube diameters are appropriate for unit capacity.
3. Run refrigerant tubes as directly as possible by avoiding unnecessary turns and bends. Tube bends shall be greater than 2.5 times the external pipe diameter.
4. Leave some slack between structure and unit to absorb vibration.
5. When passing refrigerant tubes through the wall, seal opening with RTV or other pliable silicon-based caulk. (See Fig. 1)
6. Avoid direct tubing contact with water pipes, duct work, floor joists, wall studs, floors, and walls.
7. Do not suspend refrigerant tubing from joists and studs with a rigid wire or strap which comes in direct contact with tubing.(See Fig. 1)
8. Ensure that tubing insulation is pliable and completely surrounds vapor tube.
9. When necessary, use hanger straps which are 1 in. (25.4 mm) wide and conform to shape of tubing insulation. (See Fig. 1)
10. Isolate hanger straps from insulation by using metal sleeves bent to conform to shape of insulation.
11. Maximum allowed elevation is 10,000 feet (3,000 meters) above sea level.
12. Roof mounted units exposed to winds may require baffles.
13. Provision shall be made for expansion and contraction of long runs of piping.
14. Piping and fittings shall be protected as far as possible against adverse environmental effects. For example, the accumulation of dirt and debris.
15. Piping should be installed in a manner which reduces the likelihood of hydraulic shock damaging the system.
16. Certified piping and components must be used to protect against corrosion.
17. Flexible pipe elements shall be protected against mechanical damage, excessive stress by torsion, or other forces and should be checked for mechanical damage annually.
18. Piping material, routing, and installation shall include protection from physical damage in operation and service, and be in compliance with national and local codes and standards of installation site.
19. When setting up refrigeration piping, precautions shall be taken to avoid excessive vibration or pulsations.
20. Take care to conduct proper installation of equipment, because improper installation could lead to gas pulsations, which cause excessive noise in the living area.

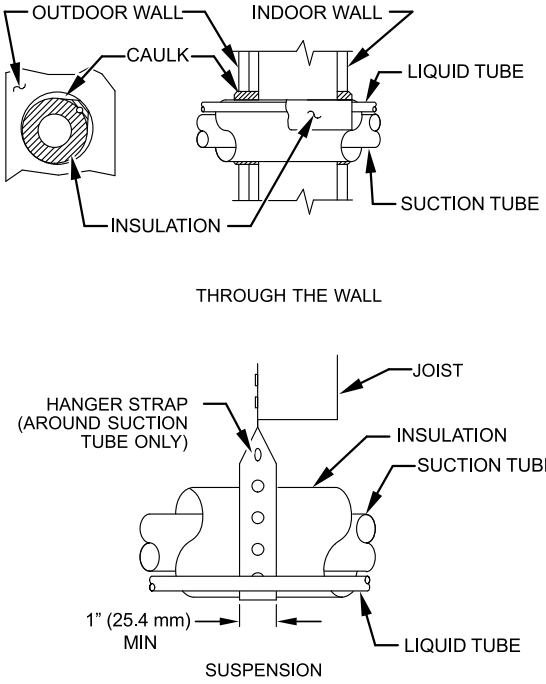

Fig. 1 – Connecting Tubing Installation

Refrigerant Tubing Connection Outdoor

IMPORTANT: Maximum liquid-line size is 3/8-in. OD for all residential applications including liquid line. Refer to Residential Piping and Long Line Guideline for further information.

IMPORTANT: Always install the factory-supplied liquid-line filter drier. If replacing the filter drier, refer to Product Replacement Parts List for appropriate part number. Obtain replacement filter driers from your distributor or branch.

INSTALLATION

IMPORTANT: All split system and packaged heat pumps must be installed pursuant to applicable regional efficiency standards issued by the Department of Energy.

⚠ CAUTION

CUT HAZARD

Failure to follow this caution may result in personal injury.

Sheet metal parts may have sharp edges or burrs. Use care and wear appropriate protective clothing and gloves when handling parts.

Check Equipment and Job Site

Unpack Unit

Move to final location. Remove carton taking care not to damage unit.

Inspect Equipment

File claim with shipping company prior to installation if shipment is damaged or incomplete. Locate unit rating plate on unit corner panel. It contains information needed to properly install unit. Check rating plate to be sure unit matches job specifications.

Install on a Solid, Level Mounting Pad

If conditions or local codes require the unit be attached to pad, tie down bolts should be used and fastened through knockouts provided in unit base pan. Refer to unit mounting pattern in Fig. 2 to determine base pan size and knockout hole location.

For hurricane tie downs, contact distributor for details and PE Certification (Professional Engineer), if required.

On rooftop applications, mount on level platform or frame. Place unit above a load-bearing wall and isolate unit and tubing set from structure. Arrange supporting members to adequately support unit and minimize transmission of vibration to building. Consult local codes governing rooftop applications.

Roof mounted units exposed to winds above 5 mph (8.05 km/h) may require wind baffles. Consult the Service Manual - Residential Split System Air Conditioners and Heat Pumps for wind baffle construction.

Unit must be level to within ±2°(±3/8 in./ft,±9.5 mm/m.) per compressor manufacturer specifications.

⚠ CAUTION

UNIT OPERATION HAZARD

Failure to follow this caution may result in equipment damage or improper operation.

Locate the unit in such a way that it is stable in all circumstances including adverse weather conditions.

Clearance Requirements

When installing, allow sufficient space for airflow clearance, wiring, refrigerant piping, and service. Allow 24 in. (609.6 mm) clearance to service end of unit and 48 in. (1219.2 mm) (above unit. For proper airflow, a 6-in. (152.4 mm) clearance on 1 side of unit and 12-in. (304.8 mm) on all remaining sides must be maintained. Maintain a distance of 24 in. (609.6 mm) between units or 18 in. (457.2 mm) if no overhang within 12 ft. (4 m). Position so water, snow, or ice from roof or eaves cannot fall directly on unit.

NOTE: 18" (457 mm) clearance option described above is approved for outdoor units with wire grille coil guard only. Units with louver panels require 24" (610 mm) between units.

On rooftop applications, locate unit at least 6 in. (152.4 mm) above roof surface.

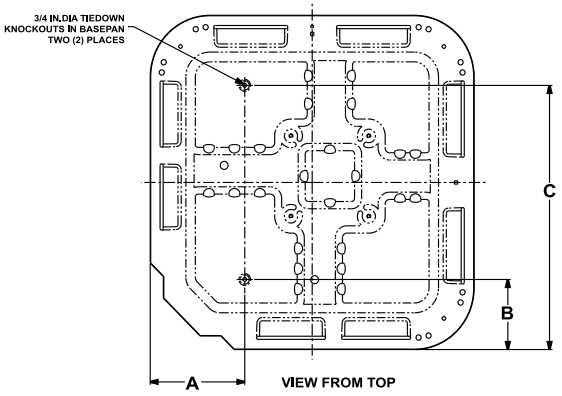

UNIT BASE PAN Dimension in. (mm)	TIEDOWN KNOCKOUT LOCATIONS in. (mm)		
	A	B	C
35 X 35 (889 X 889)	9–1/8 (231.8)	6–9/16 (166.7)	28–7/16 (722.3)

A05177

Fig. 2 – Tiedown Knockout Locations

Operating Ambient

The minimum outdoor operating ambient in cooling mode without accessory is 55°F (13°C).

Check Defrost Thermostat

Check defrost thermostat to ensure it is properly located and securely attached. There is a liquid header with a distributor and feeder tube going into outdoor coil. At the end of the one of the feeder tubes, there is a 3/8 in. O.D. stub tube approximately 2 in. long. (See Fig. 3.) The defrost thermostat should be located on stub tube. Note that there is only one stub tube used with liquid header, and on most units it is the bottom circuit.

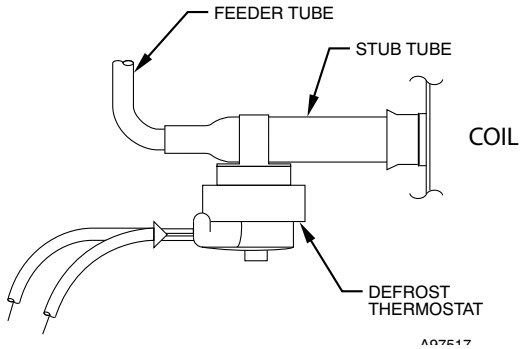

A97517

Fig. 3 – Defrost Thermostat Location

Elevate Unit

⚠ CAUTION

UNIT OPERATION HAZARD

Failure to follow this caution may result in equipment damage or improper operation.

Do not allow water and/or ice to build up in base pan.

Elevate unit per local climate and code requirements to provide clearance above estimated snowfall level and ensure adequate drainage of unit.

Table 1 – Accessory Usage

Accessory	Required for Low Ambient Cooling Applications (Below 55°F / 12.8°C)	Required for Long Line Applications*	Required for Sea Coast Applications (within 2 miles/3.2 km)
Compressor Start Assist Capacitor and Relay	Yes	Yes	No
Crankcase Heater	Yes (standard)	Yes (standard)	No
Evaporator Freeze Thermostat	Yes	No	No
Hard Shutoff TXV	Yes	Yes	No
Isolation Relay	Yes	No	No
Liquid Line Solenoid Valve	No	See Residential Piping and Long Line Guideline	No
Low-Ambient Pressure Switch	Yes	No	No
Support Feet	Recommended	No	Recommended

*. For tubing line sets between 80 and 200 ft. (24.38 and 60.96 m) and/or 20 ft. (6.09 m) vertical differential, refer to Residential Piping and Long Line Guideline.

Make Piping Connections

⚠ WARNING

PERSONAL INJURY AND ENVIRONMENTAL HAZARD

Failure to follow this warning could result in personal injury or death.

Relieve pressure and recover all refrigerant before system repair or final unit disposal.

Use all service ports and open all flow-control devices, including solenoid valves.

Federal regulations require that you do not vent refrigerant into the atmosphere. Recover refrigerant during system repair or final unit disposal.

⚠ CAUTION

UNIT DAMAGE HAZARD

Failure to follow this caution may result in equipment damage or improper operation.

If ANY refrigerant tubing is buried, provide a 6-in (152.4 mm). vertical rise at service valve. Refrigerant tubing lengths up to 36-in (914.4 mm). may be buried without further special consideration. Do not bury lines longer than 36 in (914.4 mm).

Outdoor units may be connected to indoor section using accessory tubing package or field-supplied refrigerant grade tubing of correct size and condition. Rated tubing diameters shown in Table 2 are recommended up to 80 ft (24.4 m). See Product data for acceptable alternate vapor diameters and associated capacity losses. For tubing requirements beyond 80 ft (24.4 m), substantial capacity and performance losses can occur. Following the recommendations in the Residential Piping and Long Line Guideline will reduce these losses. Refer to Table 1 for accessory requirements.

There are no buried-line applications greater than 36 in. (914.4 mm)

If refrigerant tubes or indoor coil are exposed to atmosphere, they must be evacuated to 500 microns to eliminate contamination and moisture in the system.

Refrigerant pipe should be installed with the minimum length possible and practical for the application. Piping should be protected from physical damage in operation and in service and be in compliance with national and local codes such as ASHRAE 15, ASHRAE 15.2, IAPMO Uniform Mechanical Code, ICC International Mechanical Code, or CSA B52. When piping is installed through studs in a wall, steel plates should be used for protection with a minimum thickness of 16 gage.

All field joints shall be accessible for inspection prior to being covered or enclosed.

Outdoor Unit Connected to Factory Approved R-454B Indoor Unit:

When outdoor unit is connected to factory-approved R-454B indoor unit, outdoor unit contains the approximate system refrigerant charge for operation with AHRI rated indoor unit when connected by 15 ft (4.57 m) of field-supplied or factory accessory tubing and factory-supplied filter drier. For all sizes, adjust charge by adding or removing 0.6 oz/ft of 3/8 liquid line above or below 15 ft., respectively.

Some indoor units require additional subcooling to achieve optimal heating performance. Connect vapor and liquid tubes to fittings on vapor and liquid service valves (see Table 2). Use refrigerant grade tubing.

Table 2 – Refrigerant Connections and Recommended Liquid and Vapor Tube Diameters (in.)

Unit Size	Liquid		Rated Vapor*	
	Connection Diameter	Tube Diameter	Connection Diameter	Tube Diameter
24	3/8	3/8	3/4	3/4
36	3/8	3/8	7/8	7/8
48, 60	3/8	3/8	7/8	1-1/8

*. Units are rated with 25 ft. (7.6m) of lineset. See Product Data for performance data when using different size and length linesets.

Notes:
1. Do not apply capillary tube indoor coils to these units.
2. For Tubing Set lengths between 80 and 200ft (24.38 m and 60.96 m) horizontal or 20 ft (6.09m) vertical differential 250 ft (76.2 m) Total Equivalent Length, refer to the Residential Piping and Long Line Guideline - Air Conditioners and Heat Pumps using R-454B refrigerant
3. For alternate liquid line options, see Product Data or Residential Piping and Long Line Application Guideline

Service Valves

Service valves are closed and plugged from the factory. Outdoor units are shipped with a refrigerant charge sealed in the unit. Leave the service valves closed until all other refrigerant system work is complete or the charge will be lost. Leave the plugs in place until line set tubing is ready to be inserted.

Heat pumps require a piston metering device in the liquid service valve for proper heating operation. Piston is shipped in the piston body of the liquid service valve, temporarily held in place with a plastic cap. Do not remove the plastic cap until line set tubing is ready to be installed.

Refer to Fig. 4 and follow these steps for piston installation:

1. Remove plastic cap holding piston in piston body of liquid service valve.
2. Check that piston size (stamped on side of piston) matches with number listed on unit rating plate. Return piston to piston body of liquid service valve (either direction).
3. Find plastic bag taped to unit containing copper adapter tube, brass nut, and plastic washer.
4. Install plastic washer in the seat inside piston body.
5. Fit brass nut onto adapter tube and install tube onto liquid service valve. Tighten nut finger tight, then wrench additional ½ turn only [15-ft lbs (20.3 N-m)]. Over tightening may damage the plastic washer and service valve's piston body.

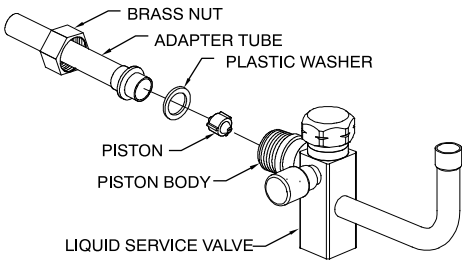

A14235

Fig. 4 – Liquid Service Valve with Heating Piston and Adapter Tube

Brazing Connections

⚠ WARNING

FIRE HAZARD

Failure to following this warning could result in personal injury, death and/or property damage.

Refrigerant and oil mixture could ignite and burn as it escapes and contacts brazing torch. Make sure the refrigerant charge is properly removed from both the high and low sides of the system before brazing any component or lines.

⚠ CAUTION

BURN HAZARD

Failure to follow this Caution may result in personal injury.

Components will be HOT after brazing. Wear appropriate personal protective equipment and allow to cool before handling parts and equipment.

For brazing connections, use a properly sized swedge tool to create a swedge (bell) on one of the two copper tubes being connected. Alternatively, a copper coupling can be used which will require two braze joints instead of one.

Clean line set tube ends with emery cloth or steel brush. Remove any grit or debris.

Connect vapor tube to fitting on outdoor unit vapor service valves (see Table 2). Connect liquid tubing to adapter tube on liquid service valve. Use refrigerant grade tubing.

⚠ CAUTION

UNIT DAMAGE HAZARD

Failure to follow this caution may result in equipment damage or improper operation.

Service valves must be wrapped in a heat–sinking material such as a wet cloth while brazing.

Apply heat absorbing paste or heat sink product between service valve and joint. Wrap service valves with a heat sinking material such as a wet cloth.

After wrapping service valve with a wet cloth, tubing set can be brazed to service valve using either silver bearing or non–silver bearing brazing material. Do not use soft solder (materials which melt below 800°F/427°C). Braze joints using a Sil-Fos or Phos-copper alloy. Consult local code requirements.

NOTE: Some outdoor units contain a mechanical fitting at the liquid distributor. This connection is not field serviceable and should not be disturbed.

NOTE: For Liquid Service Valve - Braze lineset to adapter tube BEFORE bolting adapter to valve. This helps prevent overheating and damage to plastic washer or o-ring.

For Vapor Service Valve - remove valve core from schrader port on Service Valve BEFORE brazing. This helps prevent overheating and damage to valve seals (refer to Fig. 5). Replace valve core when brazing is completed.

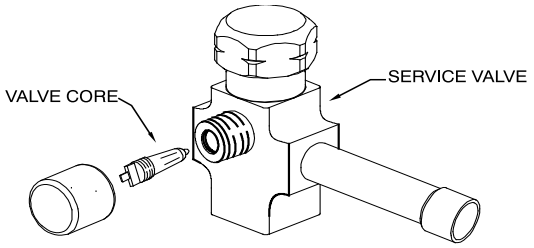

A14236

Fig. 5 – Vapor Service Valve

Mechanical Line Set Connections

If using mechanical or crimp-type line set connections, follow crimp tool manufacturer's instructions.

NOTE: Should use of the mechanical fittings cause failure of the fittings or failure of the equipment, such would not be covered under the equipment limited warranty.

Install Liquid Line Filter Drier Indoor

⚠ CAUTION

UNIT DAMAGE HAZARD

Failure to follow this caution may result in equipment damage or improper operation.

1. Installation of filter drier in liquid line is required.
2. Filter drier must be wrapped in a heat-sinking material such as a wet cloth while brazing.

Refer to Fig. 6 and install filter drier as follows:

1. Braze 5 in. (127 mm) liquid tube to the indoor coil.
2. Wrap filter drier with damp cloth.
3. Braze filter drier to 5 in. (127 mm) long liquid tube from step 1.
4. Connect and braze liquid refrigerant tube to the filter drier.

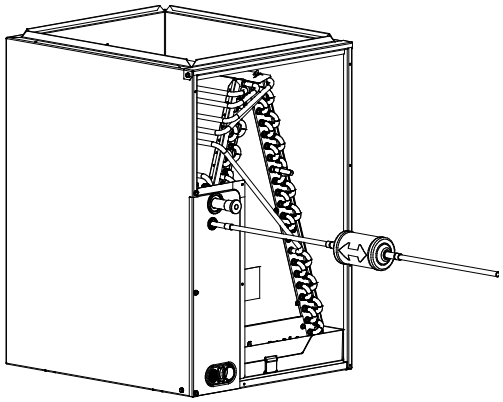

A05227

Fig. 6 – Liquid Line Filter Drier

MANDATORY PIPING REQUIREMENTS

Pressure Proof Check

Refrigerant tubes and indoor coil should be pressure tested with an inert gas such as nitrogen. Pressurize the system with the inert gas to the Low Side Test Pressure listed on the outdoor unit rating plate.

1. Perform a pressure check of the unit with a nitrogen charge of about 200 psi
2. The nitrogen holding charge must NOT decrease in pressure for 1 hour, as indicated by the test gage. The test gage resolution must not exceed 5% of the holding charge.

Final Tubing Check

IMPORTANT: Check to be certain factory tubing on both indoor and outdoor unit has not shifted during shipment. Ensure tubes are not rubbing against each other or any sheet metal. Pay close attention to feeder tubes, making sure wire ties on feeder tubes are secure and tight.

Leak Check

⚠ WARNING



EXPLOSION HAZARD

Failure to follow this warning could result in death, serious personal injury, death, and/or property damage.

Never exceed test pressures listed on the rating plate when pressure testing an outdoor unit.

⚠ WARNING

FIRE HAZARD

Failure to follow this warning could result in personal injury or death and/or property damage.

DO NOT USE FLAMES OR IGNITION SOURCES TO LEAK CHECK.

Vacuum unit to 500 microns. When isolating the unit from the pump, the pressure shall not rise above 1500 microns in 10 minutes.

The deep vacuum method requires a vacuum pump capable of pulling a vacuum of 500 microns and a vacuum gage capable of accurately measuring this vacuum depth. The deep vacuum method is the most positive way of assuring a system is free of air and liquid water. A tight dry system will hold a vacuum of 1000 microns after approximately 7 minutes. (See Fig. 7.)

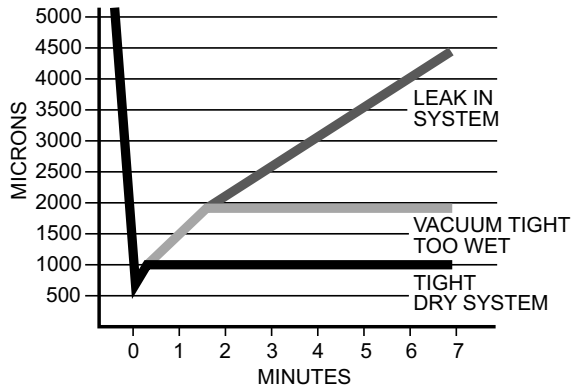

A95424

Fig. 7 – Deep Vacuum Graph

Evacuate Refrigerant Tubing and Indoor Coil

⚠ CAUTION

UNIT DAMAGE HAZARD

Failure to follow this caution may result in equipment damage or improper operation.

Never use the system compressor as a vacuum pump.

Refrigerant tubes and indoor coil should be evacuated using the recommended deep vacuum method of 500 microns. The alternate triple evacuation method may be used (see triple evacuation procedure in service manual). Always break a vacuum with dry nitrogen.

Make Electrical Connections

⚠ WARNING

ELECTRICAL SHOCK HAZARD

Failure to follow this warning could result in personal injury or death.

Do not supply power to unit with compressor terminal box cover removed.

Be sure field wiring complies with local and national fire, safety, and electrical codes, and voltage to system is within limits shown on unit rating plate. Contact local power company for correction of improper voltage. See unit rating plate for recommended circuit protection device.

NOTE: Operation of unit on improper line voltage constitutes abuse and could affect unit reliability. See unit rating plate. Do not install unit in system where voltage may fluctuate above or below permissible limits.

NOTE: Use copper wire only between disconnect switch and unit.

NOTE: Install branch circuit disconnect of adequate size per NEC to handle unit starting current. Locate disconnect within sight from and readily accessible from unit, per Section 440-14 of NEC. Refer to Product Data for breaker sizing.

Route Ground and Power Wires

Remove access panel to gain access to unit wiring. Extend wires from disconnect through power wiring hole provided and into unit control box.

Connect Ground and Power Wires

⚠ WARNING

ELECTRICAL SHOCK HAZARD

Failure to follow this warning could result in personal injury or death.

The unit cabinet must have an uninterrupted or unbroken ground to minimize personal injury if an electrical fault should occur. The ground may consist of electrical wire or metal conduit when installed in accordance with existing electrical codes.

This appliance incorporates an earth connection for safety purposes only. Connect ground wire to ground connection in control box for safety. Connect power wiring to contactor as shown in Fig. 8.

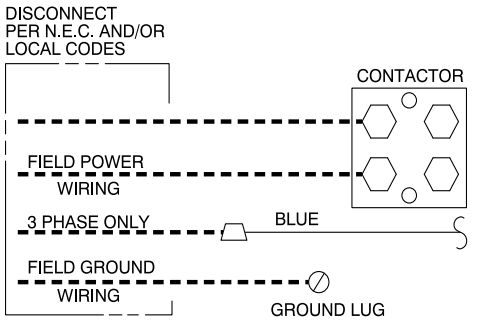

A94025

Fig. 8 – Line Connections

Connect Control Wiring

Route 24v control wires through control wiring grommet and connect leads to control wiring. See Thermostat Installation Instructions for wiring specific unit combinations. (See Fig. 9 and Fig. 10.)

Use No. 18 AWG color-coded, insulated (35°C minimum) wire. If thermostat is located more than 100 ft (30.5 m) from unit, as measured along the control voltage wires, use No. 16 AWG color-coded wire to avoid excessive voltage drop.

All wiring must be NEC Class 2 and must be separated from incoming power leads.

Use furnace transformer, fan coil transformer, or accessory transformer for control power, 24v/40va minimum.

NOTE: Use of available 24v accessories may exceed the minimum 40va power requirement. Determine total transformer loading and increase the transformer capacity or split the load with an accessory transformer as required.

NOTE: Factory Authorized Dissipation System must be installed with the indoor unit.

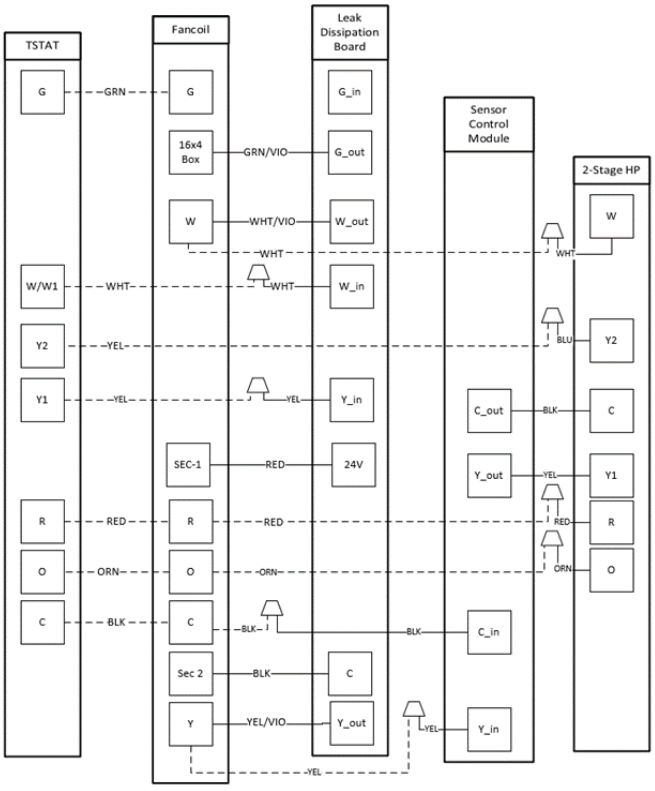

A240421

Fig. 9 – 2-Stage Heat Pump Tstat Wiring with Fan Coil Control, Sensor Control Module, and Leak Dissipation Board

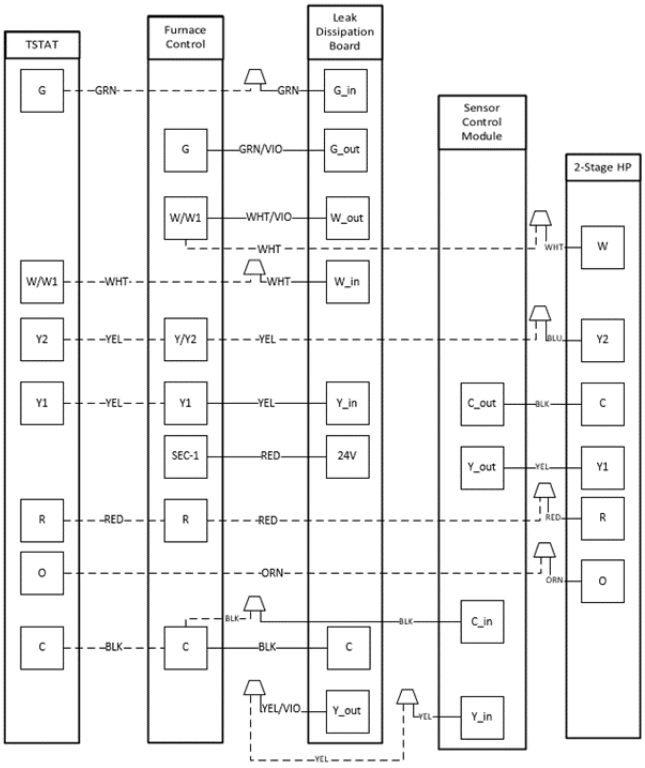

a240422

Fig. 10 – 2-Stage Heat Pump Tstat Wiring with Furnace Coil Control, Sensor Control Module, and Leak Dissipation Board

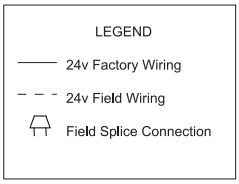

InteliSense™ Technology

This unit is InteliSense™ capable when used with an Ecobee for Carrier smart thermostat with InteliSense™ technology.

InteliSense™ technology allows for the collection of performance data to be sent to the cloud. Utilizing Carrier's digital tools, dealers can gather system settings and equipment data, with homeowner opt-in, to provide quicker and more efficient service. The unit comes with the following sensors installed on the control board:

- Liquid Service Valve Pressure (LSVP)
- Liquid Service Valve Temperature (LSVT)
- Outside Air Temperature (OAT)
- Vapor Service Valve Pressure (VSVP)
- Vapor Service Valve Temperature (VSVT)

The amber LED is illuminated solid when there is power to the product. The green LED is illuminated solid when there is communication between the control board and the InteliSense™-enabled thermostat.

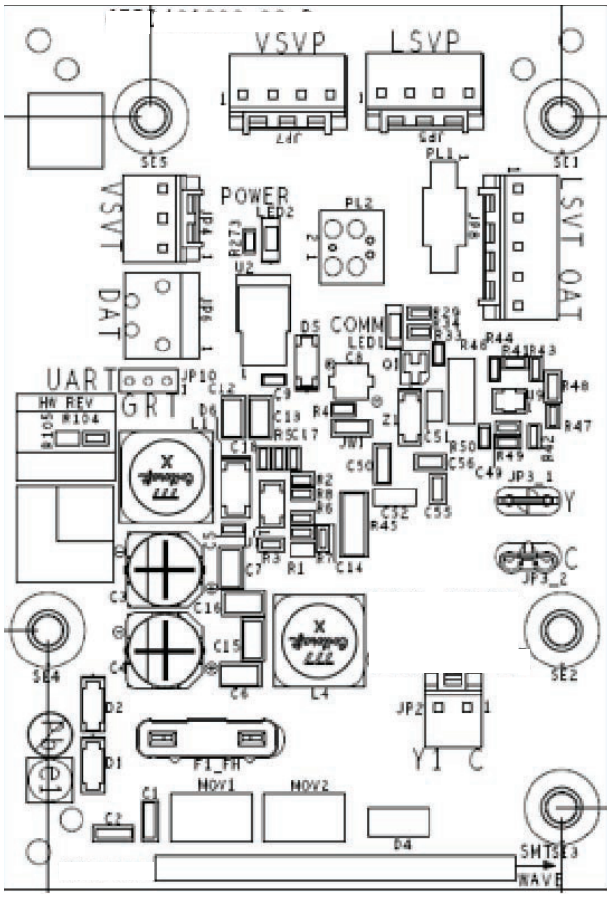

HK32EA013

Fig. 11 – Intelisense™ Control Board

For more information, refer to the thermostat advanced installation and configuration instructions found at: Carrier.HVACPartners.com/InteliSense™ Or, by scanning this QR Code:

NOTE: A new thermostat will show up in connected portal 24 hours after field installation so field gages are needed for install.

NOTE: The outdoor temperature sensor does not show up on this new thermostat display so it should not be used for troubleshooting or charging.

NOTE: HP units with InteliSense™ technology do not come with factory installed high pressure switch. Only loss of charge pressure switch is factory installed.

Final Wiring Check

IMPORTANT: Check factory wiring and field wire connections to ensure terminations are secured properly. Check wire routing to ensure wires are not in contact with tubing, sheet metal, etc.

Compressor Crankcase Heater

Furnish power to heater a minimum of 24 hours before starting unit. To furnish power to heater only, set thermostat to OFF and close electrical disconnect to outdoor unit.

A crankcase heater is required if refrigerant tubing is longer than 80 ft. (24.4 m), or when outdoor unit is 20 ft. (6.1 m) below the indoor unit. Refer to the Residential Piping and Long Line Guideline.

Install Electrical Accessories

Refer to the individual instructions packaged with kits or accessories when installing.

Airflow Selections (ECM Furnaces)

The ECM Furnaces provide blower operation to match the capacities of the compressor during high and low stage cooling operation. Tap selections on the furnace control board enable the installing technician to select the proper airflows for each stage of cooling. Refer to the literature for the furnace for further details.

Airflow Selection for Variable Speed Furnaces (non-communicating)

The variable speed furnaces provide blower operation to match the capacities of the compressor during high and low stage cooling operation. The furnace control board allows the installing technician to select the proper airflows for each stage of cooling. See furnace installation instructions for more details.

Airflow Selection for FT5A Fan Coils (non-communicating)

The FT5A provides high- and low-stage blower operation to match the capacities of the compressor at high- and low-stage.

To select recommended airflow, refer to the FT5A Installation Instructions. The FT5A utilizes a control board that allows the installing technician to select proper airflows. This fan coil has an adjustable blower-off delay factory set at 90 sec. for high- and low-stage blower operation. See fan coil installation instructions for more details.

Start-Up

⚠ CAUTION

PERSONAL INJURY HAZARD

Failure to follow this caution may result in personal injury.

Wear safety glasses, protective clothing, and gloves when handling refrigerant and observe the following:

- Front seating service valves are equipped with Schrader valves.

⚠ CAUTION

ENVIRONMENTAL HAZARD

Failure to follow this caution may result in environmental damage.

Federal regulations require that you do not vent refrigerant to the atmosphere. Recover during system repair or final unit disposal.

⚠ CAUTION

UNIT OPERATION AND SAFETY HAZARD

Failure to follow this caution may result in personal injury, equipment damage or improper operation.

- Do not overcharge system with refrigerant.
- Do not operate unit in a vacuum or at negative pressure.
- Do not disable low pressure switch in scroll compressor applications.
- Compressor dome temperatures may be hot.

Follow these steps to properly start up system:

⚠ WARNING

PERSONAL INJURY HAZARD

Failure to follow this warning could result in personal injury or death.

Do not use power tools to open and close service valves.

Power tools can cause valve stem to suddenly be ejected fro the valve body followed by a high pressure refrigerant leak.

1. After system is evacuated, fully open liquid and vapor service valves.
2. Unit is shipped with valve stem(s) front seated (closed) and caps installed. Replace stem caps after system is opened to refrigerant flow (back seated). Replace caps finger-tight and tighten with wrench an additional 1/12 turn.
3. Close electrical disconnects to energize system.
4. Set room thermostat at desired temperature. Be sure set point is below indoor ambient temperature for cooling mode operation.
5. Set room thermostat to HEAT or COOL and fan control to ON or AUTO mode, as desired.
6. Operate unit for 15 minutes. Check system refrigerant charge.

Sequence of Operation

NOTE: Defrost control board is equipped with 5 minute lockout timer that is initiated upon any interruption of power.

Turn on power to indoor and outdoor units. Transformer is energized.

These models utilize a 2-stage indoor thermostat. With a call for first (low) stage cooling or heating, the outdoor fan and low-stage compressor are energized. If low-stage cannot satisfy cooling or heating demand, high-stage is energized by the second (high) stage of the indoor thermostat. After the second stage is satisfied, the unit returns to low-stage operation until second stage is required again. When both, first and second stage cooling or heating are satisfied, the compressor will shut off.

Cooling

With first stage cooling, Y1 and O are powered on; and with second stage cooling, Y2, Y1 and O are powered on. The O energizes the reversing valve, switching it to cooling position. The Y1 signal sends low voltage through the safeties and energizes the T1 terminal on the circuit board. If the compressor has been off for 5 minutes, or power has not been cycled for 5 minutes, the ODF terminal and T2 terminal will energize. This will close the contactor and start the outdoor fan motor and compressor. When the cycle is complete, Y1 is turned off, stopping the compressor and outdoor fan. The 5 minute time guard begins counting. Compressor will not come on until this delay expires. In the event of a power interruption, the time guard will not allow another cycle for 5 minutes.

Heating

With first stage heating, Y1 is powered on; with second stage heating, Y2 and Y1 are powered on. The Y1 signal sends low voltage through the safeties and energizes the T1 terminal on the circuit board. If the compressor has been off for 5 minutes or power has not been cycled for 5 minutes, the ODF terminal and T2 terminal will energize. This will close the contactor and start the outdoor fan motor and compressor. When the cycle is complete, Y1 is turned off, stopping the compressor and outdoor fan. The 5 minute time guard begins counting. Compressor will not come on until this delay expires. In the event of a power interruption, the time guard will not allow another cycle for 5 minutes.

Compressor Operation

The basic scroll design has been modified with the addition of an internal unloading mechanism that opens a by-pass port in the first compression pocket, effectively reducing the displacement of the scroll. The opening and closing of the by-pass port is controlled by an internal electrically operated solenoid. The modulated scroll uses a single step of unloading to go from full capacity to approximately 67% capacity.

A single speed, high efficiency motor continues to run while the scroll modulates between the two capacity steps. Modulation is achieved by venting a portion of the gas in the first suction pocket back to the low side of the compressor, thereby reducing the effective displacement of the compressor.

Full capacity is achieved by blocking these vents, thus increasing the displacement to 100%. A DC solenoid in the compressor controlled by a rectified 24 volt AC signal in the external solenoid plug moves the slider ring that covers and uncovers these vents.

The vent covers are arranged in such a manner that the compressor operates at approximately 67% capacity when the solenoid is not energized and 100% capacity when the solenoid is energized. The loading and unloading of the two step scroll is done ”on the fly” without shutting off the motor between steps.

NOTE: 67% compressor capacity translates to approximately 75% cooling or heating capacity at the indoor coil.

The compressor will always start unloaded and stay unloaded for five seconds even when the thermostat is calling for high stage capacity.

Quiet Shift-2

Quiet shift- 2 is a field selectable defrost mode (factory set to OFF), which will reduce the occasional noise that could be heard at the start of defrost cycle and restarting of heating cycle. It is selected by placing DIP switch 3 on defrost board in the ON position. When Quiet Shift- 2 switch is placed in ON position, and defrost is initiated, the following sequence of operation will occur: The compressor will be de- energized for approximately 1 minute, then the reversing valve will be energized. A few seconds later, the compressor will be re- energized and the normal defrost cycle starts.

Once defrost termination conditions have been met, the following sequence will occur: The compressor will be de- energized for approximately 1 minute, then the reversing valve will be de- energized. A few seconds later, the compressor will be re- energized and the normal heating cycle starts.

Defrost

The defrost control is a time/temperature control which has field selectable settings of 30, 60, 90, or 120 minutes. The default defrost interval is set to 60 minutes. To meet AHRI rating, adjust defrost length to Rated Defrost Interval Length per Table 3.

Table 3 – Rated Defrost Lengths for Each Size

Unit Size	Rated Defrost Length
24	90
36	90
48	60
60	60

These settings represent the initial time period that must pass after closure of the defrost thermostat before the defrost sequence begins, after which the defrost period varies with defrost length. If Quiet Shift 2 is enabled, the variable defrost intervals will be disabled to provide options where using a specific setting is desired. In this case the 30, 60, 90, or 120 minutes setting will not change unless the dipswitch is changed and power is cycled.

The defrost thermostat senses coil temperature throughout the heating cycle. When the coil temperature reaches the defrost thermostat setting of approximately 32°F (0°C), it will close, which energizes the DFT terminal and begins the defrost timing sequence. When the DFT has been energized for the selected time, the defrost cycle begins. Defrost cycle is terminated when defrost thermostat opens, or automatically after 10 minutes.

Defrost Speedup

To initiate a forced defrost, speedup pins (J1) must be shorted with a flat head screwdriver for 5 seconds and RELEASED. If the defrost thermostat is open, a short defrost cycle will be observed (actual length depends on Quiet Shift- 2 switch position). When Quiet Shift- 2 is off, only a short 30 second defrost cycle is observed. With Quiet Shift- 2 ON, the speedup sequence is approximately 3 minutes; 1 minute compressor off period followed by 30 seconds of defrost with compressor operation. When returning to heating mode, the compressor will turn off for an additional 1 minute.

If the defrost thermostat is closed, a complete defrost cycle is initiated. If the Quiet Shift- 2 switch is turned on, the compressor will be turned off for two 1 minute intervals as explained previously.

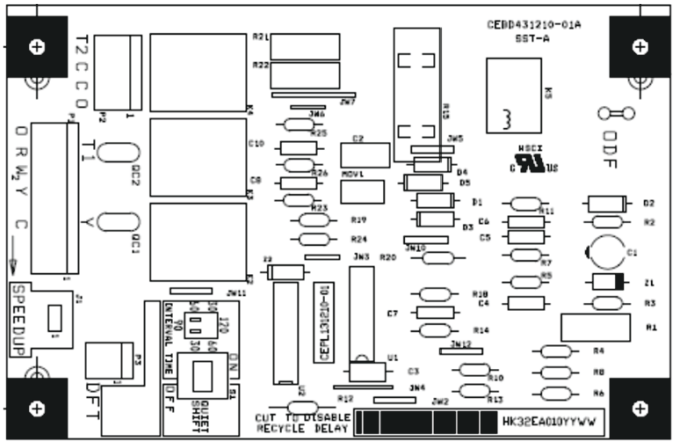

HK32EA010YYWW

Fig. 12 – Defrost Control

Check Charge

NOTE: CHARGE IN HIGH STAGE ONLY.

Factory charge amount and desired subcooling are shown on unit rating plate. Care should be taken to ensure proper refrigerant is used for charging.

Refer to outdoor unit rating plate to determine proper refrigerant. Refrigerant cylinders used for charging should be kept in an appropriate position and grounded to earth before charging. Hose length should be kept to a minimum. Care should be taken to not overcharge the system.Charging method is shown on information plate inside unit. To properly check or adjust charge, conditions must be favorable for subcooling charging. Favorable conditions exist when the outdoor temperature is between 70°F and 100°F (21.11°C and 37.78°C), and the indoor temperature is between 70°F and 80°F (21.11°C and 26.67°C). Follow the procedure below:

Unit is factory charged for 15ft (4.57 m) of lineset. Adjust charge by adding or removing 0.6 oz/ft (.018 kg/m) of 3/8 liquid line above or below 15ft (4.57 m) respectively.

For standard refrigerant line lengths (80 ft/24.38 m or less), allow system to operate in cooling mode at least 15 minutes. If conditions are favorable, check system charge by subcooling method. If any adjustment is necessary, adjust charge slowly and allow system to operate for 15 minutes to stabilize before declaring a properly charged system.

If the indoor temperature is above 80°F (26.67°C), and the outdoor temperature is in the favorable range, adjust system charge by weight based on line length and allow the indoor temperature to drop to 80°F (26.67°C) before attempting to check system charge by subcooling method as described above.

If the indoor temperature is below 70°F (21.11°C), or the outdoor temperature is not in the favorable range, adjust charge for line set length above or below 15ft (4.57 m) only. Charge level should then be appropriate for the system to achieve rated capacity. The charge level could then be checked at another time when the both indoor and outdoor temperatures are in a more favorable range.

NOTE: If line length is beyond 80 ft (24.38 m) or greater than 20 ft (6.10 m) vertical separation, See Long Line Guideline for special charging requirements.

Final charge should be recorded on the outdoor unit charging label with permanent and legible writing. Total refrigerant charge is factory charge plus any added charge. Verify that the indoor space served by the indoor unit, including spaces connected by ductwork, exceed the minimum room size as listed on the outdoor unit charging label. Refer to Table 4.

Table 4 – Minimum Room Area Charging Table

Total System Charge (lbs.)	Minimum Floor Area (sq. ft.)
4	61
5	76
6	91
7	106
8	122
9	137
10	152
11	167
12	182
13	196
14	213
15	226
16	243
17	256
18	274
19	289
20	304
21	319
22	335
23	350
24	365
25	380

Units with Cooling Mode TXV

Units installed with cooling mode TXV require charging by the subcooling method.

1. Operate unit a minimum of 15 minutes before checking charge.
2. Measure liquid service valve pressure by attaching an accurate gage to service port.
3. Measure liquid line temperature by attaching an accurate thermistor type or electronic thermometer to liquid line near outdoor coil.
4. Refer to unit rating plate for required subcooling temperature.
5. Refer to Table 5. Find the point where required subcooling temperature intersects measured liquid service valve pressure.
6. To obtain required subcooling temperature at a specific liquid line pressure, add refrigerant if liquid line temperature is higher than indicated or reclaim refrigerant if temperature is lower. Allow a tolerance of ±3°F (±1.7°C).

Heating Check Chart Procedure

To check system operation during heating cycle, refer to the Heating Check Chart on outdoor unit. This chart indicates whether a correct relationship exists between system operating pressure and air temperature entering indoor and outdoor units. If pressure and temperature do not match on chart, system refrigerant charge may not be correct. Do not use chart to adjust refrigerant charge. If charge is believed not to be correct evacuate unit and weigh in correct amount. Return to installation should be done when conditions are correct to utilize subcooling measurement to verify correct charging.

Table 5 – Required Liquid Line Temperature

Liquid (PSIG) Pressure at Service Valve	R-454B Required Subcooling Temperature (°F)					
	6	8	10	12	14	16
238	78	76	74	72	70	68
245	80	78	76	74	72	70
252	82	80	78	76	74	72
260	84	82	80	78	76	74
268	86	84	82	80	78	76
276	88	86	84	82	80	78
284	90	88	86	84	82	80
292	92	90	88	86	84	82
301	94	92	90	88	86	84
309	96	94	92	90	88	86
318	98	96	94	92	90	88
327	100	98	96	94	92	90
336	102	100	98	96	94	92
346	104	102	100	98	96	94
355	106	104	102	100	98	96
365	108	106	104	102	100	98
375	110	108	106	104	102	100
385	112	110	108	106	104	102
396	114	112	110	108	106	104
406	116	114	112	110	108	106
417	118	116	114	112	110	108
428	120	118	116	114	112	110
439	122	120	118	116	114	112
450	124	122	120	118	116	114

Verify units for proper switching between low & high stages

Check the suction pressures at the service valves. Suction pressure should be reduced by 3-10% when switching from low to high capacity.

Compressor current should increase 20-45% when switching from low to high stage. The compressor solenoid when energized in high stage, should measure 24vac at leads inside control box.

When the compressor is operating in low stage the 24v DC compressor solenoid coil is de-energized. When the compressor is operating in high stage, the 24v DC solenoid coil is energized. The solenoid plug harness that is connected to the compressor HAS an internal rectifier that converts the 24v AC signal to 24v DC. **DO NOT INSTALL A PLUG WITHOUT AN INTERNAL RECTIFIER**.

Unloader Test Procedure

The unloader is the compressor internal mechanism, controlled by the DC solenoid, that modulates between high and low stage. If it is suspected that the unloader is not working, the following methods may be used to verify operation.

1. Operate the system and measure compressor amperage. Cycle the unloader on and off at 30 second plus intervals at the thermostat (from low to high stage and back to low stage). Wait 5 seconds after staging to high before taking a reading. The compressor amperage should go up or down at least 20 percent.
2. If the expected result is not achieved, remove the solenoid plug from the compressor and with the unit running and the thermostat calling for high stage, test the voltage output at the plug with a DC voltmeter. The reading should be 24 volts DC.
3. If the correct DC voltage is at the control circuit molded plug, measure the compressor unloader coil resistance. The resistance should be approximately 1640 ohms. If the coil resistance is infinite or is grounded, the compressor must be replaced.

Final Checks

IMPORTANT: Before leaving job, be sure to do the following:

1. Ensure that all wiring is routed away from tubing and sheet metal edges to prevent rub-through or wire pinching.
2. Ensure that all wiring and tubing is secure in unit before adding panels and covers. Securely fasten all panels and covers.
3. Tighten service valve stem caps to 1/12-turn past finger tight.
4. Leave Owner's Manual with owner. Explain system operation and periodic maintenance requirements outlined in manual.
5. Fill out Dealer Installation Checklist and place in customer file.

TROUBLESHOOTING

If the compressor fails to operate with a cooling call, the table below (Resistance table) can be used to verify if there is any damage to the compressor windings causing system malfunction.

Table 6 – Winding Resistance

Winding	Winding resistance at 70°F +/- 20°F (21.11°C +/- 11.11°C)			
	Unit Size			
	024	036	048	060
Start (S-C)	1.652	1.471	1.660	1.203
Run (R-C)	1.065	0.728	0.436	0.383

MAJOR COMPONENTS

2-Stage Compressor

The 2-stage compressor contains motor windings that provide 2-pole (3500 RPM) operation.

Compressor Internal Relief

The compressor is protected by an internal pressure relief (IPR) which relieves discharge gas into compressor shell when differential between suction and discharge pressures exceeds and 550 - 625 psi. The compressor is also protected by an internal overload attached to motor windings.

Compressor Control Contactor

The contactor has a 24 volt coil and is controlled by Y1 input from the thermostat

Low Pressure Switch

Low pressure switch is provided in line with the Y1 signal to the contactor for protection.

Repairing Refrigerant Circuit

When breaking into the refrigerant circuit to make repairs, or for any other purpose, the following procedures shall be used.

1. Safely remove the refrigerant using a recovery pump certified for flammable refrigerants.
2. Purge the refrigerant circuit with nitrogen gas.
3. Evacuate the refrigerant circuit to 1500 microns.
4. Break vacuum with a nitrogen purge of the refrigerant circuit ensuring that the outlet of the vacuum pump is not near a potential ignition source.
5. Open the circuit by cutting or brazing.

Care and Maintenance

For continuing high performance and to minimize possible equipment failure, periodic maintenance must be performed on this equipment.

Frequency of maintenance may vary depending upon geographic areas, such as coastal applications. See Users Manual for information.

Puron ADVANCE™

AHRI CERTIFIED www.ahridirectory.org
Use of the AHRI Certified TM Mark indicates a manufacturer's participation in the program For verification of certification for individual products, go to www.ahridirectory.org.

Certified System Quality ISO 9001 SAI GLOBAL

UL C US

ENERGY STAR

TRAINING

My Learning Center is your central location for professional residential HVAC training resources that help strengthen careers and businesses. We believe in providing high quality learning experiences both online and in the classroom.

Access My Learning Center with your HVACpartners credentials at www.mlctraining.com. Please contact us a mylearning@carrier.com with questions.

© 2024 Carrier. All rights reserved.

Edition Date: 10/24

Catalog No: 27TPA8-01SI

Replaces:New

Manufacturer reserves the right to change, at any time, specifications and designs without notice and without obligations.