27SPA6
Single-Stage Heat Pumps
with Puron Advance™ Refrigerant
1.5 To 5 Nominal Tons

Carrier

Installation Instructions

NOTE: For use with R-454B indoor units only. Read the entire instruction manual before starting the installation.

SAFETY CONSIDERATIONS 1
GENERAL 1
INSTALLATION 2
- Check Equipment and Job Site 2
- Install on a Solid, Level Mounting Pad 2
- Clearance Requirements 2
- Operating Ambient. 3
- Check Defrost Thermostat 3
- Elevate Unit 3
- Make Piping Connections 4
- Mandatory Requirements 6
- Make Electrical Connections 7
- Compressor Crankcase Heater 8
- Liquid Line Solenoid Valve 8
- Install Electrical Accessories 8
- Start–Up 8
- Check Charge 10

Final Checks 11
Repairing Refrigerant Circuit 11
Care and Maintenance 11

SAFETY CONSIDERATIONS

IMPORTANT: This appliance shall only be installed by EPA qualified personnel having appropriate certification. This appliance is not intended for use by persons (including children) with reduced physical, sensory or mental capabilities or lack of experience and knowledge, unless they have been given supervision or instruction concerning use of the appliance by a person responsible for their safety

Improper installation, adjustment, alteration, service, maintenance, or use can cause explosion, fire, electrical shock, or other conditions which may cause death, personal injury, or property damage. Consult a qualified installer, service agency, or your distributor or branch for information or assistance. The qualified installer or agency must use factory–authorized kits or accessories when modifying this product. Refer to the individual instructions packaged with the kits or accessories when installing.

Follow all safety codes. Wear safety glasses, protective clothing, and work gloves. Use quenching cloth for brazing operations. Have a dry powder or CO2 fire extinguisher available. Read these instructions thoroughly and follow all warnings or cautions included in literature and attached to the unit. Consult local building codes and current editions of the National Electrical Code (NEC) NFPA 70. In Canada, refer to current editions of the Canadian electrical code CSA 22.1.

Proper tools should be used that are designed for the refrigerant of the unit being installed. For A2L refrigerants, non-sparking tools are required. A refrigerant detector should be used prior to and during the installation process to check for leaks. Open flames or other ignition sources should not be present except during brazing. Brazing should only take place on refrigerant tubes that are open to the atmosphere or have been properly evacuated

Recognize safety information. This is the safety–alert symbol ⚠. When you see this symbol on the unit and in instructions or manuals, be alert to the potential for personal injury.

Understand these signal words; DANGER, WARNING, and CAUTION. These words are used with the safety–alert symbol. DANGER identifies the most serious hazards which will result in severe personal injury or death. WARNING signifies hazards which could result in personal injury or death. CAUTION is used to identify unsafe practices which may result in minor personal injury or product and property damage. NOTE is used to highlight suggestions which will result in enhanced installation, reliability, or operation.

⚠ WARNING

ELECTRICAL SHOCK HAZARD

Failure to follow this warning could result in personal injury or death.

Before installing, modifying, or servicing system, main electrical disconnect switch must be in the OFF position. There may be more than one disconnect switch. Lock out and tag switch with a suitable warning label.

⚠ WARNING

EXPLOSION HAZARD



Failure to follow this warning could result in death, serious personal injury, and/or property damage.

Never use air or any gas containing oxygen for leak testing or operating refrigerant compressors. Never allow compressor suction pressure to operate in a vacuum with service valves closed. See service manual for pump-down instructions.

GENERAL

NOTE: In some cases noise in the living area has been traced to gas pulsations from improper installation of equipment.

1. Maximum allowed elevation is 10,000 feet (3000 meters) above sea level.
2. Locate unit away from windows, patios, decks, etc. where unit operation sound may disturb customer.
3. Ensure that vapor and liquid tube diameters are appropriate for unit capacity.
4. Run refrigerant tubes with no bends with centerline bend radius less than 2.5 times the external pipe diameter..
5. Leave some slack between structure and unit to absorb vibration.
6. When passing refrigerant tubes through the wall, seal opening with RTV or other pliable silicon–based caulk (see Fig. 1).
7. Avoid direct tubing contact with water pipes, duct work, floor joists, wall studs, floors, and walls.

8. Do not suspend refrigerant tubing from joists and studs with a rigid wire or strap which comes in direct contact with tubing (see Fig. 1).
9. Ensure that tubing insulation is pliable and completely surrounds vapor tube.
10. When necessary, use hanger straps which are 1 in. (25 mm) wide and conform to shape of tubing insulation (see Fig. 1).
11. Isolate hanger straps from insulation by using metal sleeves bent to conform to shape of insulation.
12. Provision shall be made for expansion and contraction of long runs of piping.
13. Piping and fittings shall be protected as far as possible against adverse environmental effects. For example, the accumulation of dirt and debris.
14. Piping should be installed to reduce the likelihood of hydraulic shock damaging the system.
15. Certified piping and components must be used in order to protect against corrosion.
16. Flexible pipe elements shall be protected against mechanical damage, excessive stress by torsion, or other forces. They should be checked for mechanical damage annually.
17. Piping material, routing, and installation shall include protection from physical damage in operation and service, and be in compliance with the national and local codes and standards of the installation site.
18. When setting up refrigerant piping, precautions shall be taken to avoid excessive vibration or pulsation.

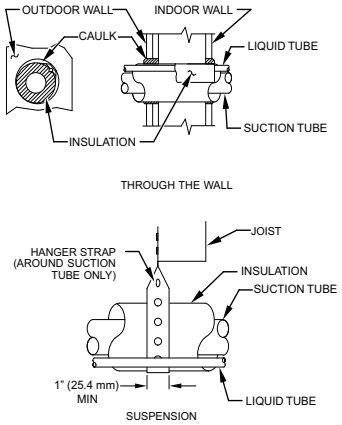

Fig. 1 – Connecting Tubing Installation

Refrigerant Tubing Connection Outdoor

IMPORTANT: Maximum liquid–line size is 3/8–in. OD for all residential applications including long line. Refer to Residential Piping and Long Line Guideline for further information

IMPORTANT: Always install the factory–supplied liquid–line filter drier.

If replacing the filter drier, refer to Product Replacement Parts List for appropriate part number. Obtain replacement filter driers from your distributor or branch.

INSTALLATION

IMPORTANT: Effective January 1, 2023, all split system and packaged heat pumps must be installed pursuant to applicable regional efficiency standards issued by the Department of Energy.

⚠ CAUTION

CUT HAZARD

Failure to follow this caution may result in personal injury.

Sheet metal parts may have sharp edges or burrs. Use care and wear appropriate protective clothing and gloves when handling parts.

Check Equipment and Job Site

Unpack Unit

Move to final location. Remove carton taking care not to damage unit.

Inspect Equipment

File claim with shipping company prior to installation if shipment is damaged or incomplete. Locate unit rating plate on unit corner panel. It contains information needed to properly install unit. Check rating plate to be sure unit matches job specifications.

Install on a Solid, Level Mounting Pad

If conditions or local codes require the unit be attached to pad, tie down bolts should be used and fastened through knockouts provided in unit base pan. Refer to unit mounting pattern in Fig. 2 to determine base pan size and knockout hole location.

For hurricane tie downs, contact distributor for details and PE Certification (Professional Engineer), if required.

On rooftop applications, mount on level platform or frame. Place unit above a load–bearing wall and isolate unit and tubing set from structure. Arrange supporting members to adequately support unit and minimize transmission of vibration to building. Consult local codes governing rooftop applications.

Roof mounted units exposed to winds above 5 mph may require wind baffles. Consult the Application Guideline and Service Manual – Residential Split System Air Conditioners and Heat Pumps for wind baffle construction.

Unit must be level to within ±2° (±3/8 in/ft,±9.5 mm/m) per compressor manufacturer specifications.

Clearance Requirements

When installing, allow sufficient space for airflow clearance, wiring, refrigerant piping, and service. Allow 24 in. (610 mm) clearance to service end of unit and 48 in. (1219 mm) above unit. For proper airflow, a 6–in. (152 mm) clearance on 1 side of unit and 12–in. (305 mm) on all remaining sides must be maintained. Maintain a distance of 24 in. (610 mm) between units or 18 in. (457 mm) if no overhang within 12 ft. (4 m). Position so water, snow, or ice from roof or eaves cannot fall directly on unit.

NOTE: 18” (457 mm) clearance option described above is approved for outdoor units with wire grille coil guard only. Units with louver panels require 24” (610 mm) between units.

On rooftop applications, locate unit at least 6 in. (152 mm) above roof surface.

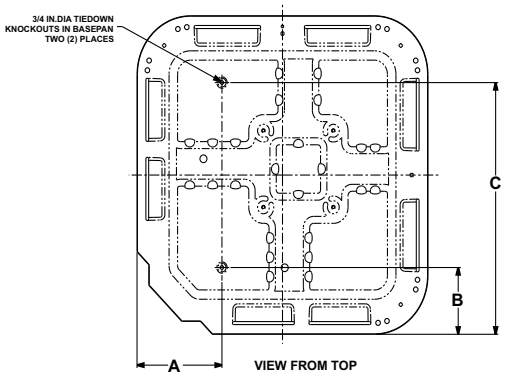

UNIT BASE PAN Dimension in. (mm)	TIEDOWN KNOCKOUT LOCATIONS in. (mm)		
	A	B	C
31–1/2 X 31–1/2 (800 X 800)	9–1/8 (231.8)	6–9/16 (166.7)	24–11/16 (627.1)
35 X 35 (889 X 889)	9–1/8 (231.8)	6–9/16 (166.7)	28–7/16 (722.3)

Fig. 2 – Tiedown Knockout Locations

Operating Ambient

The minimum outdoor operating ambient in cooling mode without accessory is 55°F (13°C).

Check Defrost Thermostat

⚠ WARNING

PERSONAL INJURY AND ENVIRONMENTAL HAZARD

Failure to follow this warning could result in personal injury or death.

Do not use means to accelerate the defrosting process or to clean, other than those recommended by the manufacturer.

The appliance shall be stored in a room without continuously operating ignition sources (for example:

open flames, an operating gas appliance or an operating electric heater.

Do not pierce or burn.

Be aware that refrigerants do not contain an odor.

Check defrost thermostat to ensure it is properly located and securely attached. There is a liquid header with a distributor and feeder tube going into outdoor coil. At the end of the one of the feeder tubes, there is a 3/8 in. O.D. stub tube approximately 2 in. (50.8 mm) long (see Fig. 3). The defrost thermostat should be located on stub tube. Note that there is only one stub tube used with liquid header, and on most units it is the bottom circuit.

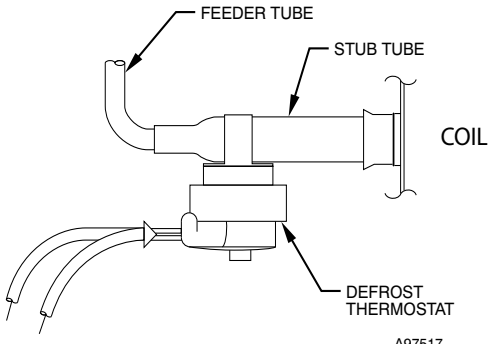

Fig. 3 – Defrost Thermostat Location

Elevate Unit

⚠ CAUTION

UNIT OPERATION HAZARD

Failure to follow this caution may result in equipment damage or improper operation.

Do not allow water and/or ice to build up in base pan.

Elevate unit per local climate and code requirements to provide clearance above estimated snowfall level and ensure adequate drainage of unit.

Table 1 – Accessory Usage

Accessory	REQUIRED FOR LOW–AMBIENT COOLING APPLICATIONS (Below 55°F / 12.8°C)	REQUIRED FOR LONG LINE APPLICATIONS*	REQUIRED FOR SEA COAST APPLICATIONS (Within 2 miles / 3.22 km)
Accumulator	Standard	Standard	Standard
Ball Bearing Fan Motor	Yes†	No	No
Compressor Start Assist Capacitor and Relay	Yes	Yes	No
Crankcase Heater	Yes	Yes	No
Evaporator Freeze Thermostat	Yes	No	No
Isolation Relay	Yes	No	No
Liquid Line Solenoid Valve	No	See Long–Line Application Guideline	No
Motor Master® Control or Low Ambient Switch	Yes‡	No	No
Support Feet	Recommended	No	Recommended

*. For tubing line sets between 80 and 200 ft. (24.38 and 60.96 m), refer to Residential Piping and Long Line Guideline.
†. Additional requirement for Low–Ambient Controller (full modulation feature) MotorMaster® Control.
‡. In units equipped with ECM OD motor, motor needs to be replaced per unit accessory guide to work properly. This motor kit comes with a new defrost board that also needs to be installed. Unit will not meet AHRI rated efficiency once motor and control board are replaced to use this accessory.

Make Piping Connections

⚠ WARNING

PERSONAL INJURY AND ENVIRONMENTAL HAZARD

Failure to follow this warning could result in personal injury or death.

Relieve pressure and recover all refrigerant before system repair or final unit disposal.

Use all service ports and open all flow–control devices, including solenoid valves.

Federal regulations require that refrigerant is not vented into the atmosphere. Recover during system repair or final unit disposal.

⚠ CAUTION

UNIT DAMAGE HAZARD

Failure to follow this caution may result in equipment damage or improper operation.

If ANY refrigerant tubing is buried, provide a 6–in (152 mm) vertical rise at service valve. Refrigerant tubing lengths up to 36–in (914 mm). may be buried without further special consideration. Do not bury lines longer than 36 in (914 mm).

Outdoor units may be connected to indoor section using accessory tubing package or field–supplied refrigerant grade tubing of correct size and condition.

Rated tubing diameters shown in Table 2 are recommended up to 80 ft. (24 m). See Product Data for acceptable alternate vapor diameters and associated capacity losses.

For tubing requirements beyond 80 ft, substantial capacity and performance losses can occur. Following the recommendations in the Residential Piping and Long Line Guideline will reduce these losses. Refer to Table 1 for accessory requirements.

There are no buried–line applications greater than 36 in. (914 mm)

If refrigerant tubes or indoor coil are exposed to atmosphere, they must be evacuated to 500 microns to eliminate contamination and moisture in the system.

Refrigerant pipe should be installed with the minimum length possible and practical for the application. Piping should be protected from physical damage in operation and in service and be in compliance with national and local codes such as ASRHAE 15, ASHRAE 15.2, IAPMO Uniform Mechanical Code, ICC International Mechanical Code, or CSA B52. When piping is installed through studs in a wall, steel plates should be used for protection with a minimum thickness of 16 gage.

All field joints shall be accessible for inspection prior to being covered or enclosed.

Outdoor Unit Connected To Factory Approved R-454B Indoor Unit

When outdoor unit is connected to factory–approved R-454B indoor unit, outdoor unit contains approximate system refrigerant charge for operation with AHRI rated indoor unit when connected by 15 ft. (5 m) of field–supplied or factory accessory tubing and factory supplied filter drier. For all sizes, adjust charge by adding or removing 0.6 oz/ft of 3/8 liquid line above or below 15 ft. (5 m) respectively..

Some indoor units require additional subcooling to achieve optimal heating performance.

Connect vapor and liquid tubes to fittings on vapor and liquid service valves (see Table 2). Use refrigerant grade tubing.

Table 2 – Refrigerant Connections and Recommended Liquid and Vapor Tube Diameters (In.)

UNIT SIZE	LIQUID		RATED VAPOR*	
	Connection Diameter	Tube Diameter	Connection Diameter	Tube Diameter
18, 19, 24	3/8	3/8	5/8	5/8
30, 31, 36	3/8	3/8	3/4	3/4
42, 48	3/8	3/8	7/8	7/8
60	3/8	3/8	7/8	1–1/8

*. Units are rated with 25 ft. (7.6 m) of lineset. See Product Data sheet for performance data when using different size and length linesets.
Notes:

1. Do not apply capillary tube indoor coils to these units.
2. For Tubing Set lengths between 80 and 200 ft. (24.38 and 60.96 m) horizontal or 20 ft. (6.09 m) vertical differential 250 ft. (76.2 m) Total Equivalent Length, refer to the Residential Piping and Long Line Guideline – Air Conditioners and Heat Pumps using Puron Advance refrigerant.
3. For alternate liquid line options, see Product Data or Residential Piping and Long Line Application Guideline

Service Valves

Service valves are closed and plugged from the factory. Outdoor units are shipped with a refrigerant charge sealed in the unit. Leave the service valves closed until all other refrigerant system work is complete or the charge will be lost. Leave the plugs in place until line set tubing is ready to be inserted.

Heat pumps require a piston metering device in the liquid service valve for proper heating operation. Piston is shipped in the piston body of the liquid service valve, temporarily held in place with a plastic cap. Do not remove the plastic cap until line set tubing is ready to be installed.

Refer to Fig. 4 and follow these steps for piston installation:

1. Remove plastic cap holding piston in piston body of liquid service valve.
2. Check that piston size (stamped on side of piston) matches with number listed on unit rating plate. Return piston to piston body of liquid service valve (either direction).
3. Find plastic bag taped to unit containing copper adapter tube, brass nut, and plastic washer.
4. Install plastic washer in the seat inside piston body.
5. Fit brass nut onto adapter tube and install tube onto liquid service valve. Tighten nut finger tight, then wrench additional ½ turn only [15-ft lbs (20.3 N-m)]. Over tightening may damage the plastic washer and service valve's piston body.

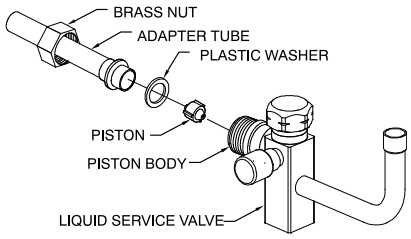

Fig. 4 – Liquid Service Valve with Heating Piston and Adapter Tube

Brazing Connections

⚠ CAUTION

BURN HAZARD

Failure to follow this caution may result in personal injury.

Components will be HOT after brazing. Wear appropriate personal protective equipment and allow to cool before handling parts and equipment.

If using brazing connections, use a properly sized swedge tool to create a swedge (bell) on one of the two copper tubes being connected. Alternatively, a copper coupling can be used which will require two braze joints instead of one.

Clean line set tube ends with emery cloth or steel brush. Remove any grit or debris.

Connect vapor tube to fitting on outdoor unit vapor service valves (see Table 2). Connect liquid tubing to adapter tube on liquid service valve. Use refrigerant grade tubing.

⚠ CAUTION

UNIT DAMAGE HAZARD

Failure to follow this caution may result in equipment damage or improper operation.

Service valves must be wrapped in a heat–sinking material such as a wet cloth while brazing.

Apply heat absorbing paste or heat sink product between service valve and joint. Wrap service valves with a heat sinking material such as a wet cloth.

After wrapping service valve with a wet cloth, tubing set can be brazed to service valve using either silver bearing or non–silver bearing brazing material. Do not use soft solder (materials which melt below 800°F/427°C). Braze joints using a Sil-Fos or Phos-copper alloy. Consult local code requirements.

Some outdoor units contain a mechanical fitting at the liquid distributor. This connection is not field serviceable and should not be disturbed.

For Liquid Service Valve - Braze lineset to adapter tube BEFORE bolting adapter to valve. This helps prevent overheating and damage to plastic washer or o-ring.

For Vapor Service Valve - remove valve core from schrader port on Service Valve BEFORE brazing. This helps prevent overheating and damage to valve seals (refer to Fig. 5). Replace valve core when brazing is completed.

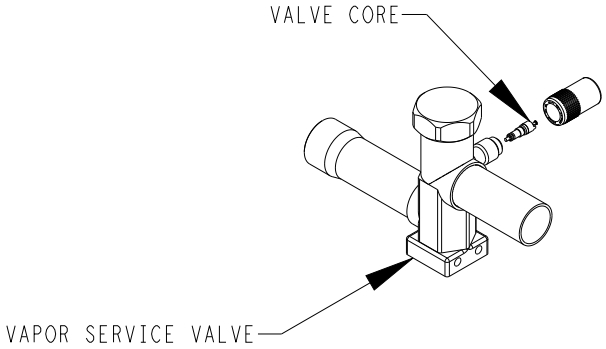

Fig. 5 – Vapor Service Valve

⚠ WARNING

FIRE HAZARD

Failure to following this warning could result in personal injury, death and/or property damage.

Refrigerant and oil mixture could ignite and burn as it escapes and contacts brazing torch. Make sure the refrigerant charge is properly removed from both the high and low sides of the system before brazing any component or lines.

Mechanical Line Set Connections

If using mechanical or crimp-type line set connections, follow crimp tool manufacturer's instructions.

NOTE: Should the use of mechanical fittings cause failure of the fittings or failure of the equipment, such would not be covered under the equipment limited warranty.

Install Liquid Line Filter Drier Indoor

⚠ CAUTION

UNIT DAMAGE HAZARD

Failure to follow this caution may result in equipment damage or improper operation.

Installation of filter drier in liquid line is required.

Filter drier must be wrapped in a heat-sinking material such as a wet cloth while brazing

Refer to Fig. 6 and install filter drier as follows:

1. Braze 5 in. (127 mm) liquid tube to the indoor coil.
2. Wrap filter drier with damp cloth.
3. Braze filter drier to 5 in. (127 mm) long liquid tube from step 1.
4. Connect and braze liquid refrigerant tube to the filter drier.

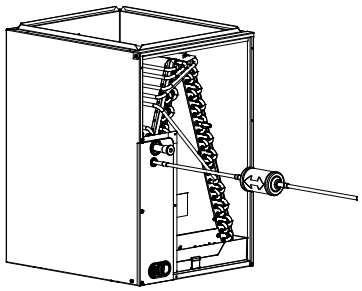

Fig. 6 – Liquid Line Filter Drier

Install Liquid Line Solenoid Valve Outdoor

⚠ CAUTION

UNIT DAMAGE HAZARD

Failure to follow this caution may result in equipment damage or improper operation.

Installation of solenoid valve in liquid line is required when provided.

Solenoid valve must be wrapped in a heat-sinking material such as a wet cloth while brazing

Refer to Fig. 7 and install filter drier as follows:

1. Wrap solenoid valve with damp cloth.
2. Braze solenoid valve to adapter tube connected to liquid service valve. Flow arrow must point towards outdoor coil. Solenoid stem must not point downwards.
3. Connect and braze liquid refrigerant tube to solenoid valve.

NOTE: When solenoid valve is de-energized (closed), refrigerant flow will be stopped only in the direction of the flow arrow on the valve body.

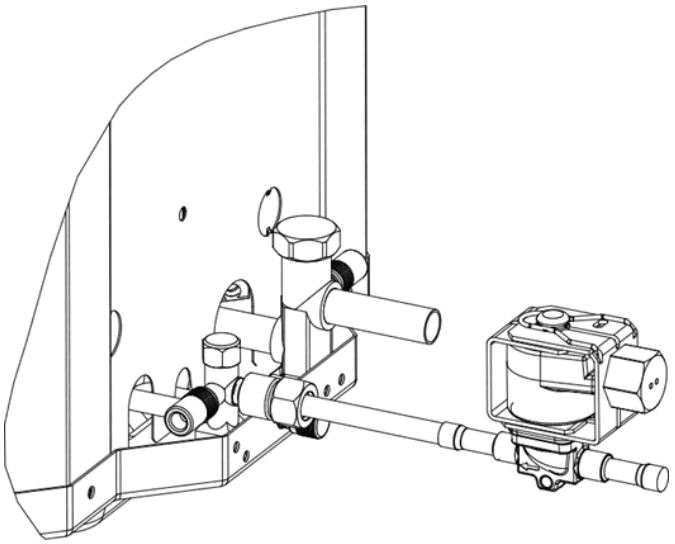

Fig. 7 – Liquid Line Service Valve

Mandatory Requirements

Pressure Proof Check

Refrigerant tubes and indoor coil should be pressure tested with an inert gas such as nitrogen. Pressurize the system with the inert gas to the Low Side Test Pressure listed on the outdoor unit rating plate

1. Perform a pressure check of the unit with a nitrogen charge of about 200psi.
2. The nitrogen holding charge must NOT decrease in pressure for 1 hour, as indicated by the test gauge. The measuring test gauge resolution not exceeding 5% of the holding charge.

Final Tubing Check

IMPORTANT: Check to be certain factory tubing on both indoor and outdoor unit has not shifted during shipment. Ensure tubes are not rubbing against each other or any sheet metal. Pay close attention to feeder tubes, makings sure wire ties on feeder tubes are secure and tight.

Pressure Test Tubing and Indoor Coil

Refrigerant tubes and indoor coil should be pressure tested with an inert gas such as nitrogen. Pressurize the system with the inert gas to the Low Side Test Pressure listed on the outdoor unit rating plate

⚠ WARNING



EXPLOSION HAZARD

Failure to follow this warning could result in death, serious personal injury, and/or property damage.

Never exceed the test pressures listed on the rating plate when pressure testing an outdoor unit.

Leak Check

The deep vacuum method requires a vacuum pump capable of pulling a vacuum of 500 microns and a vacuum gage capable of accurately measuring this vacuum depth. The deep vacuum method is the most positive way of assuring a system is free of air and liquid water. A tight dry system will hold a vacuum of 1000 microns after approximately 7 minutes. (See Fig. 8.)

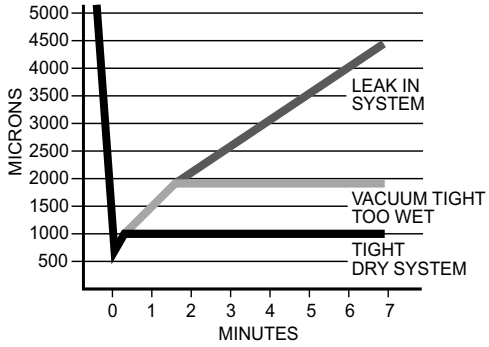

Fig. 8 – Deep Vacuum Graph

⚠ WARNING

FIRE HAZARD

Failure to following this warning could result in personal injury, death and/or property damage.

DO NOT USE FLAMES OR IGNITION SOURCES TO LEAK CHECK.

Vacuum unit to 500 microns. When isolating the unit from the pump, the pressure shall not rise above 1500 microns in 10 minutes.

Evacuate Refrigerant Tubing and Indoor Coil

⚠ CAUTION

UNIT DAMAGE HAZARD

Failure to follow this caution may result in equipment damage or improper operation.

Never use the system compressor as a vacuum pump.

Refrigerant tubes and indoor coil should be evacuated using the recommended deep vacuum method of 500 microns. The alternate triple evacuation method may be used (see triple evacuation procedure in service manual). Always break a vacuum with dry nitrogen.

Make Electrical Connections

⚠ WARNING

ELECTRICAL SHOCK HAZARD

Failure to follow this warning could result in personal injury or death.

Do not supply power to unit with compressor terminal box cover removed.

Be sure field wiring complies with local and national fire, safety, and electrical codes, and voltage to system is within limits shown on unit rating plate. Contact local power company for correction of improper voltage. See unit rating plate for recommended circuit protection device.

NOTE: Operation of unit on improper line voltage constitutes abuse and could affect unit reliability. See unit rating plate. Do not install unit in system where voltage may fluctuate above or below permissible limits.

NOTE: Use copper wire only between disconnect switch and unit.

NOTE: Install branch circuit disconnect of adequate size per NEC to handle unit starting current. Locate disconnect within sight from and readily accessible from unit, per Section 440–14 of NEC. Refer to Product Data for breaker sizing.

Route Ground and Power Wires

Remove access panel to gain access to unit wiring. Extend wires from disconnect through power wiring hole provided and into unit control box.

Connect Ground and Power Wires

⚠ WARNING

ELECTRICAL SHOCK HAZARD

Failure to follow this warning could result in personal injury or death.

The unit cabinet must have an uninterrupted or unbroken ground to minimize personal injury if an electrical fault should occur. The ground may consist of electrical wire or metal conduit when installed in accordance with national and local electrical codes.

This appliance incorporates an earth connection for safety purposes only. Connect ground wire to ground connection in control box for safety. Connect power wiring to contactor as shown in Fig. 9.

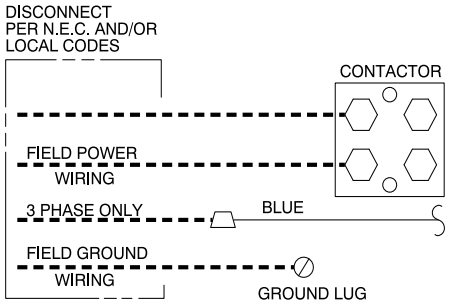

Fig. 9 – Line Connections

Connect Control Wiring

Route 24v control wires through control wiring grommet and connect leads to control wiring. See Thermostat Installation Instructions for wiring specific unit combinations. (See Fig. 10.)

Use No. 18 AWG color–coded, insulated (35°C minimum) wire. If thermostat is located more than 100 ft (31 m) from unit, as measured along the control voltage wires, use No. 16 AWG color–coded wire to avoid excessive voltage drop.

All wiring must be NEC Class 2 and must be separated from incoming power leads.

Use furnace transformer, fan coil transformer, or accessory transformer for control power, 24v/40va minimum.

NOTE: Use of available 24v accessories may exceed the minimum 40va power requirement. Determine total transformer loading and increase the transformer capacity or split the load with an accessory transformer as required.

NOTE: Factory Authorized Dissipation System must be installed with the indoor unit.

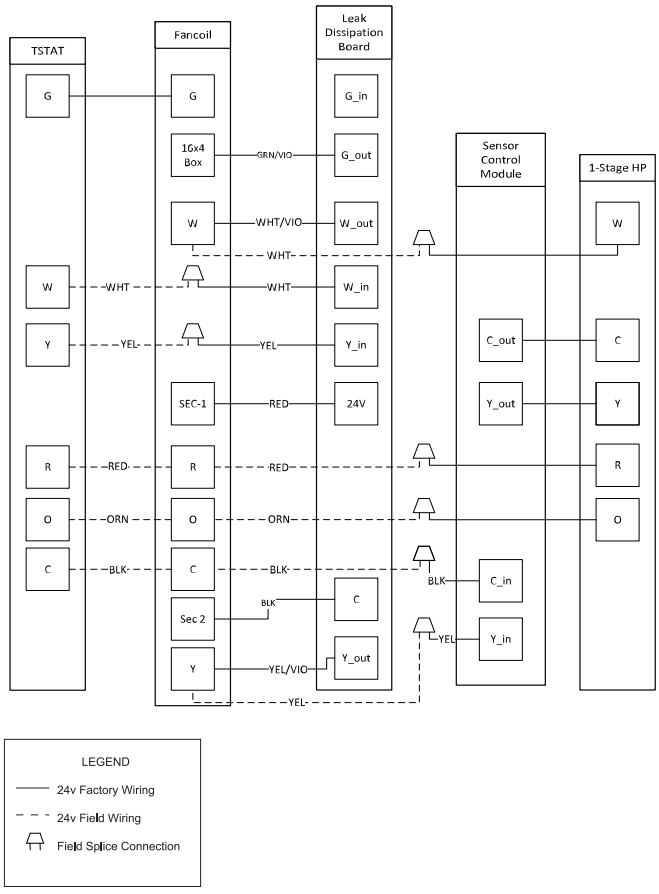

Fig. 10 – Generic Wiring Diagram
(See tstat Installation Instructions for specific unit combinations)

InteliSense™ Technology

This unit is InteliSense™ capable when used with an Ecobee for Carrier smart thermostat with InteliSense™ technology.

InteliSense™ technology allows for the collection of performance data to be sent to the cloud. Utilizing Carrier's digital tools, dealers can gather system settings and equipment data, with homeowner opt-in, to provide quicker and more efficient service. The unit comes with the following sensors installed on the control board (see Fig. 11):

- Liquid Service Valve Pressure (LSVP)
- Liquid Service Valve Temperature (LSVT)
- Outside Air Temperature (OAT)
- Vapor Service Valve Pressure (VSVP)
- Vapor Service Valve Temperature (VSVT)

The amber LED is illuminated solid when there is power to the product. The green LED is illuminated solid when there is communication between the control board and the InteliSense™-enabled thermostat.

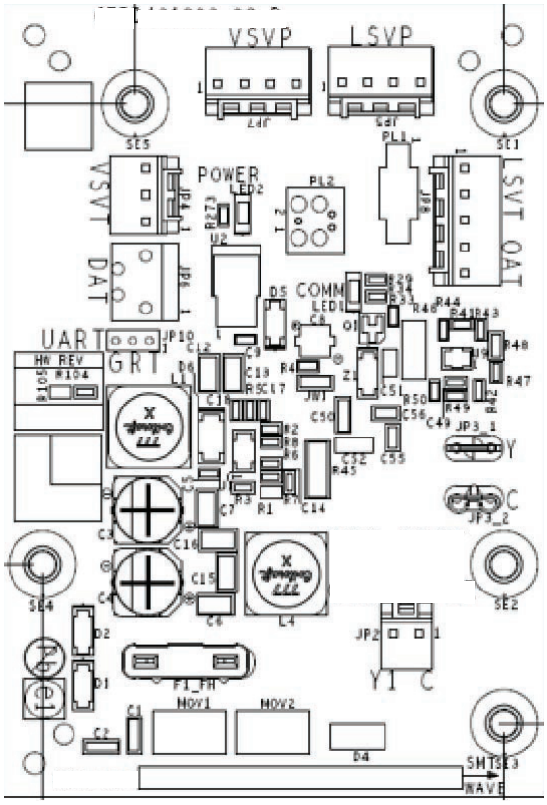

Fig. 11 – InteliSense™ Control Board

For more information, refer to the thermostat advanced installation and configuration instructions found at:
Carrier.HVACPartners.com/InteliSense InteliSense™

Or, by scanning this QR Code:

NOTE: A new thermostat will show up in connected portal 24 hours after field installation so field gauges are needed for install.

NOTE: The outdoor temperature sensor does not show up on this new thermostat display so it should not be used for troubleshooting or charging.

NOTE: HP units with InteliSense™ technology do not come with factory installed high pressure switch. Only loss of charge pressure switch is factory installed.

Final Wiring Check

IMPORTANT: Check factory wiring and field wire connections to ensure terminations are secured properly. Check wire routing to ensure wires are not in contact with tubing, sheet metal, etc.

Compressor Crankcase Heater

When equipped with a crankcase heater, furnish power to heater a minimum of 24 hr before starting unit. To furnish power to heater only, set thermostat to OFF and close electrical disconnect to outdoor unit.

A crankcase heater is required if refrigerant tubing is longer than 80 ft (24 m), or when outdoor unit is 20 ft (6 m) below indoor unit. Refer to the Residential Piping and Long Line Guideline and Service Manual.

Liquid Line Solenoid Valve

A liquid line solenoid valve Part No. EF11BF121 is provided and required for 27SPA619 models.

Solenoid coil must be wired into 24-v control circuit so coil is energized (open) with outdoor unit. For single-stage units, wire solenoid coil between Y (contactor) and C (common) terminals.

Install Electrical Accessories

Refer to the individual instructions packaged with kits or accessories when installing.

⚠ WARNING

PERSONAL INJURY AND/OR PROPERTY DAMAGE HAZARD

Failure to follow this warning could result in personal injury and/or property damage.

For continued performance, reliability, and safety, the only approved accessories and replacement parts are those specified by the equipment manufacturer. The use of non-manufacturer approved parts and accessories could invalidate the equipment limited warranty and result in fire risk, equipment malfunction, and failure.

Please review the manufacturer's literature and replacement parts catalogs available from your equipment supplier.

Start–Up

⚠ CAUTION

PERSONAL INJURY HAZARD

Failure to follow this caution may result in personal injury.

Wear safety glasses, protective clothing, and gloves when handling refrigerant and observe the following:

- Front seating service valves are equipped with Schrader valves.

⚠ CAUTION

ENVIRONMENTAL HAZARD

Failure to follow this caution may result in environmental damage.

Federal regulations require that you do not vent refrigerant to the atmosphere. Recover during system repair or final unit disposal.

⚠ CAUTION

UNIT OPERATION AND SAFETY HAZARD

Failure to follow this caution may result in personal injury, equipment damage or improper operation.

- Do not overcharge system with refrigerant.
- Do not operate unit in a vacuum or at negative pressure.
- Do not disable low pressure switch in scroll compressor applications.
- Compressor dome temperatures may be hot.

Follow these steps to properly start up system:

⚠ WARNING

PERSONAL INJURY HAZARD

Failure to follow this warning could result in personal injury or death.

Do not use power tools to open and close service valves.

Power tools can cause valve stem to suddenly be ejected from the valve body followed by a high pressure refrigerant leak.

1. After system is evacuated, fully open liquid and vapor service valves.
2. Unit is shipped with valve stem(s) front seated (closed) and caps installed. Replace stem caps after system is opened to refrigerant flow (back seated). Replace caps finger–tight and tighten with wrench an additional 1/12 turn.
3. Close electrical disconnects to energize system.
4. Set room thermostat at desired temperature. Be sure set point is below indoor ambient temperature for cooling mode operation.
5. Set room thermostat to HEAT or COOL and fan control to ON or AUTO mode, as desired. Operate unit for 15 minutes. Check system refrigerant charge.

Sequence of Operation

Turn on power to indoor and outdoor units. Transformer is energized.

Cooling

On a call for cooling, thermostat makes circuits R–O and R–Y, and R–G. Circuit R–O energizes reversing valve, switching it to cooling position. Circuit R–Y energizes contactor, starting outdoor fan motor and compressor circuit. R–G energizes indoor unit blower relay, starting indoor blower motor on high speed.

When thermostat is satisfied, its contacts open, de–energizing contactor and blower relay. Compressor and motors should stop.

If indoor unit is equipped with a time–delay relay circuit, the indoor blower will run an additional 90 seconds to increase system efficiency.

Heating

On a call for heating, thermostat makes circuits R–Y and R–G. Circuit R–Y energizes contactor, starting outdoor fan motor and compressor. Circuit R–G energizes indoor blower relay, starting blower motor on high speed.

Should temperature continue to fall, R–W2 is made through second–stage room thermostat. Circuit R–W2 energizes a relay, bringing on first bank of supplemental electric heat and providing electrical potential to second heater relay (if used). If outdoor temperature falls below setting of outdoor thermostat (field installed option), contacts close to complete circuit and bring on second bank of supplemental electric heat.

When thermostat is satisfied, its contacts open, de–energizing contactor and relay. All heaters and motors should stop.

Quiet Shift-2

Quiet Shift-2 is a field selectable defrost mode (factory set to OFF), which will reduce the occasional noise that could be heard at the start of defrost cycle and restarting of heating cycle. It is selected by placing DIP switch 3 on defrost board in the ON position.

When Quiet Shift-2 switch is placed in ON position, and defrost is initiated, the following sequence of operation will occur:

– The compressor will be de--energized for approximately 1 minute, then the reversing valve will be energized. A few seconds later, the compressor will be re-energized and the normal defrost cycle starts.

Once defrost termination conditions have been met, the following sequence will occur:

– The compressor will be de-energized for approximately 1 minute, then the reversing valve will be de-energized. A few seconds later, the compressor will be re-energized and the normal heating cycle starts.

Defrost

The defrost control is a time/temperature control which includes a field selectable time period between defrost cycles (30, 60, 90, or 120). The time period is selected using DIP switches located on the board. The setting is initial period only then varies with defrost length.

The defrost thermostat senses coil temperature throughout the heating cycle. When the coil temperature reaches the defrost thermostat setting of approximately 32°F (0°C), it will close, which energizes the DFT terminal and begins the defrost timing sequence. The timer runs only when the defrost thermostat is closed and the contactor is energized.

Defrost mode is identical to cooling mode except that outdoor fan motor stops and second-stage heat is turned on to continue warming conditioned spaces.

Defrost Speedup

Quiet Shift-2 Models

To initiate a forced defrost, speedup pins (J1) must be shorted with a flat head screwdriver for 5 seconds and **RELEASED**. If the defrost thermostat is open, a short defrost cycle will be observed (actual length depends on Quiet Shift-2 switch position). When Quiet Shift-2 is off, only a short 30 second defrost cycle is observed. With Quiet Shift-2 ON, the speedup sequence is approximately 3 minutes; 1 minute compressor off period followed by 30 seconds of defrost with compressor operation. When returning to heating mode, the compressor will turn off for an additional minute.

If the defrost thermostat is closed, a complete defrost cycle is initiated. If the Quiet Shift-2 switch is turned on, the compressor will be turned off for two 1-minute intervals as explained previously.

If Quiet Shift 2 is enabled, the variable defrost intervals will be disabled to provide options where using a specific setting is desired. In this case the 30, 60, 90, or 120 setting will not change unless the dipswitch is changed, and power is cycled.

NOTE: Forcing a defrost will reset the defrost interval to the DIP switch setting before resuming variable length intervals based on defrost cycle lengths.

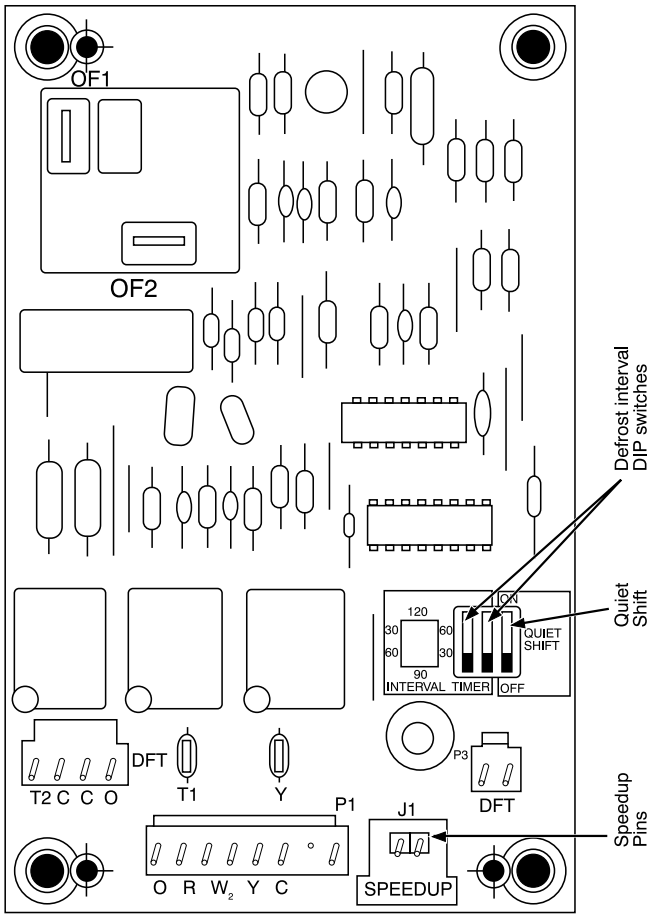

Fig. 12 – Quiet Shift-2 Control Board

Check Charge

Factory charge amount and desired subcooling are shown on unit rating plate. Additional subcooling may be required to achieve optimal heating performance based on the installed indoor unit..

Care should be taken to ensure proper refrigerant is used for charging. Refer to outdoor unit rating plate to determine proper refrigerant. Refrigerant cylinders used for charging should be kept in an appropriate position and grounded to earth before charging. Hose length should be kept to a minimum. Care should be taken to not overcharge the system.

Charging method is shown on information plate inside unit. For TXV, use subcooling method. For piston, use superheat method. To properly check or adjust charge, conditions must be favorable for subcooling or superheat charging. Favorable conditions exist when the outdoor temperature is between 70°F and 100°F (21.1°C and 37.8°C), and the indoor temperature is between 70°F and 80°F (21.1°C and 26.7°C). Follow the procedure below:

Unit is factory charged for 15ft (5 m) of lineset. Adjust charge by adding or removing 0.6 oz/ft (.018 kg/m) of 3/8 liquid line above or below 15ft (5 m) respectively.

For standard refrigerant line lengths (80 ft/24 m or less), allow system to operate in cooling mode at least 15 minutes. If conditions are favorable, check system charge by super heat method for fixed metering device and subcooling method for TXV. If any adjustment is necessary, adjust charge slowly and allow system to operate for 15 minutes to stabilize before declaring a properly charged system.

If the indoor temperature is above 80°F (26.7°C), and the outdoor temperature is in the favorable range, adjust system charge by weight based on line length and allow the indoor temperature to drop to 80°F (26.7°C) before attempting to check system charge by subcooling method as described above.

If the indoor temperature is below 70°F (21.1°C), or the outdoor temperature is not in the favorable range, adjust charge for line set length above or below 15ft (5 m) only. Charge level should then be appropriate for the system to achieve rated capacity. The charge level could then be checked at another time when the both indoor and outdoor temperatures are in a more favorable range.

NOTE: If line length is beyond 80 ft (24 m) or greater than 20 ft (6 m) vertical separation, See Residential Piping and Long Line Guideline for special charging requirements.

Final charge should be recorded on the outdoor unit charging label with permanent and legible writing. Total refrigerant charge is factory charge plus any added charge. Verify that the indoor space served by the indoor unit, including spaces connected by ductwork, exceed the minimum room size as listed on the outdoor unit charging label. Refer to Table 3.

Table 3 – Minimum Room Area Charging Table

Total System Charge (lbs.)	Minimum Floor Area (sq. ft.)
4	61
5	76
6	91
7	106
8	122
9	137
10	152
11	167
12	182
13	198
14	213
15	228
16	243
17	258
18	274
19	289
20	304
21	319
22	335
23	350
24	365
25	380

Units with Cooling Mode TXV

Units installed with cooling mode TXV require charging by the subcooling method.

1. Operate unit a minimum of 15 minutes before checking charge.
2. Measure liquid service valve pressure by attaching an accurate gage to service port.
3. Measure liquid line temperature by attaching an accurate thermistor type or electronic thermometer to liquid line near outdoor coil.
4. Refer to unit rating plate for required subcooling temperature.
5. Refer to Table 4. Find the point where required subcooling temperature intersects measured liquid service valve pressure.
6. To obtain required subcooling temperature at a specific liquid line pressure, add refrigerant if liquid line temperature is higher than indicated or reclaim refrigerant if temperature is lower. Allow a tolerance of ±3°F (±1.7°C).

Heating Check Chart Procedure

To check system operation during heating cycle, refer to the Heating Check Chart on outdoor unit. This chart indicates whether a correct relationship exists between system operating pressure and air temperature entering indoor and outdoor units. If pressure and temperature do not match on chart, system refrigerant charge may not be correct. Do not use chart to adjust refrigerant charge.

Table 4 – Required Liquid Line Temperature

Liquid (PSIG) Pressure at Service Valve	Required Subcooling Temperature °F					
	6	8	10	12	14	16
238	78	76	74	72	70	68
245	80	78	76	74	72	70
252	82	80	78	76	74	72
260	84	82	80	78	76	74
268	86	84	82	80	78	76
276	88	86	84	82	80	78
284	90	88	86	84	82	80
292	92	90	88	86	84	82
301	94	92	90	88	86	84
309	96	94	92	90	88	86
318	98	96	94	92	90	88
327	100	98	96	94	92	90
336	102	100	98	96	94	92
346	104	102	100	98	96	94
355	106	104	102	100	98	96
365	108	106	104	102	100	98
375	110	108	106	104	102	100
385	112	110	108	106	104	102
396	114	112	110	108	106	104
406	116	114	112	110	108	106
417	118	116	114	112	110	108
428	120	118	116	114	112	110
439	122	120	118	116	114	112
450	124	122	120	118	116	114

Final Checks

IMPORTANT: Before leaving job, be sure to do the following:

1. Ensure that all wiring is routed away from tubing and sheet metal edges to prevent rub–through or wire pinching.
2. Ensure that all wiring and tubing is secure in unit before adding panels and covers. Securely fasten all panels and covers.
3. Tighten service valve stem caps to 1/12–turn past finger tight.
4. Leave Owner's Manual with owner. Explain system operation and periodic maintenance requirements outlined in manual.
5. Fill out Dealer Installation Checklist and place in customer file.

Repairing Refrigerant Circuit

When breaking into the refrigerant circuit to make repairs, or for any other purpose, the following procedures shall be used.

1. Safely remove the refrigerant using a recovery pump certified for flammable refrigerants.

2. Purge the refrigerant circuit with nitrogen gas.

3. Evacuate the refrigerant circuit to 1500 microns.

4. Break vacuum with a nitrogen purge of the refrigerant circuit ensuring that the outlet of the vacuum pump is not near a potential ignition source.

5. Open the circuit by cutting or brazing.

Care and Maintenance

For continuing high performance and to minimize possible equipment failure, periodic maintenance must be performed on this equipment.

Frequency of maintenance may vary depending upon geographic areas, such as coastal applications. See Users Manual for information.

Puron ADVANCE™

AHRI CERTIFIED www.ahridirectory.org

Use of the AHRI Certified TM Mark indicates a manufacturer's participation in the program For verification of certification for individual products, go to www.ahridirectory.org.

Certified System Quality ISO 9001 SAI GLOBAL

C UL US

ENERGY STAR

Training

My Learning Center is your central location for professional residential HVAC training resources that help strengthen careers and businesses. We believe in providing high quality learning experiences both online and in the classroom.

Access My Learning Center with your HVACpartners credentials at www.mlctraining.com. Please contact us a mylearning@carrier.com with questions.

© 2025 Carrier. All rights reserved.

Edition Date: 07/25

Catalog No: 27SPA6-02SI

Replaces: 27SPA6-1SI

Manufacturer reserves the right to change, at any time, specifications and designs without notice and without obligations.